PLANS FOR
WEBB COUNTY
ROADWAY IMPROVEMENTS
ESPEJO GATES ROAD

INDEX OF SHEETS

SHEET No.	DESCRIPTION
GENERAL	
1.	TITLE SHEET
2.	PROJECT LAYOUT
3-5.	GENERAL NOTES
6-7.	PROPOSED TYPICAL SECTION
8-10.	SUMMARY TABLES OF ESTIMATED QUANTITIES
11.	SUMMARY OF SMALL SIGNS
12-18.	EARTHWORK TABULATION SHEETS SUMMARY
TRAFFIC CONTROL PLAN / TxDOT TRAFFIC CONTROL DETAILS	
19-20.	TRAFFIC CONTROL PLAN
21-25.	TCP (2-1), (2-2), (2-3), (2-7), (2-8) - 12
26-29.	TCP (3-1) - 13
TxDOT BARRICADE STANDARDS / TEMP WORK ZONE DETAILS	
30-41.	BC (1) - 07 TRHU BC (12) - 07
42.	WZ (TD) - 03
43.	WZ (UL) - 13
44.	WZ (RCD) - 13
45.	WZ (BRK) - 13
46.	WZ (STPM) - 03
ROADWAY IMPROVEMENTS PLAN	
47.	LINE TABLE
48-63.1.	COORDINATE SHEETS
64-89.	PLAN AND PROFILE SHEETS
90.	DETAIL SHEET
TxDOT DELINEATOR / MARKER DETAILS	
91-95.	DOM (1) - 10, (2), (5) - 04
75.	GF (31)LS-14
76.	GF (31)DAT-14
77.	GF (31)TR-11
78.	GF (31)MS-11
79.	SGT(8)-14
80.	SGT(8)H-14
81.	SGT(8S)31-14
103-104.	TRAFFIC RAIL TYPE T631
105.	MBGF(T101)-11
106-107.	PM (1), (2)-12
108.	SMD(GEN) - 08
109.	WF (2)-10
DRAINAGE DETAILS	
110-139.	BOX / PIPE CULVERT DETAILS
TxDOT CULVERT / HEADWALL DETAILS	
140.	PW
141.	DRIVEWAY PROFILE DETAILS
142.	CH-PW-0
143.	CH-PW-S
144.	BAS
145.	SCP-3
146.	SCP-4
147.	SCP-5
148.	SCP-6
149.	SCP-10
150.	SCP-MD
151.	EC(1)-09
152.	EC(2)-93

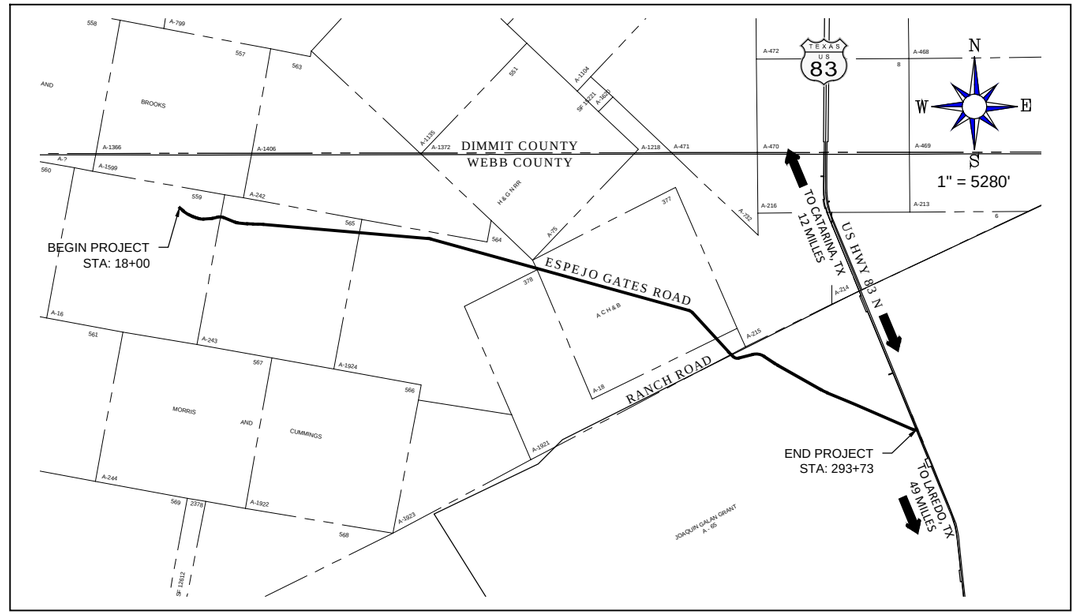

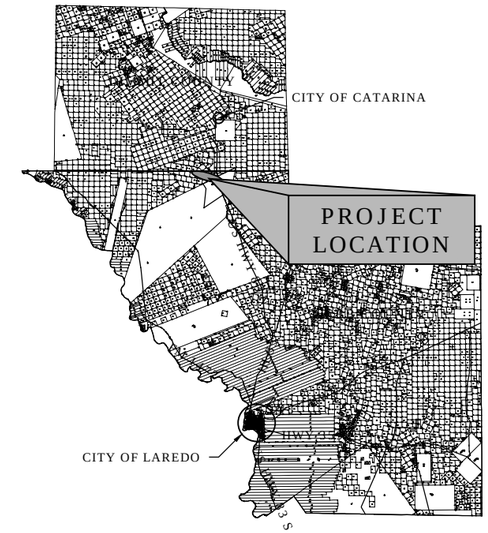

WEBB COUNTY, TEXAS

HONORABLE TANO E. TIJERINA, WEBB COUNTY JUDGE

WEBB COUNTY COMMISSIONERS

PRECINCT 1	FRANK SCIARAFFA
PRECINCT 2	ROSAURA "WAWI" TIJERINA
PRECINCT 3	JOHN GALO
PRECINCT 4	JAIME CANALES

LUIS PEREZ-GARCIA, P.E., C.F.M. — DATE
COUNTY ENGINEER

JUNE 6TH, 2016
MANUEL E. ESCAMILLA, PE, RPLS — DATE
PROJECT MANAGER

THE STANDARD SHEETS SPECIFICALLY IDENTIFIED ABOVE, HAVE BEEN SELECTED BY ME OR UNDER MY RESPONSIBLE SUPERVISION AS BEING APPLICABLE TO THIS PROJECT.

6/6/2016
FRANCISCO RAMOS, P.E., R.P.L.S. — DATE

STATE OF TEXAS
FRANCISCO RAMOS
108833
LICENSED
PROFESSIONAL ENGINEER

PLANS PREPARED BY
S&B INFRASTRUCTURE, LTD.
TEXAS BOARD OF PROFESSIONAL ENGINEERS #: F-1582

L:\PROJECTS\WEBB COUNTY\U23\Webb County TxDOT CERTE\Dwg\SHEETS\1-GENERAL\DWG FILE\1-TITLE SHEET 2_1_1_1300-U45.dwg

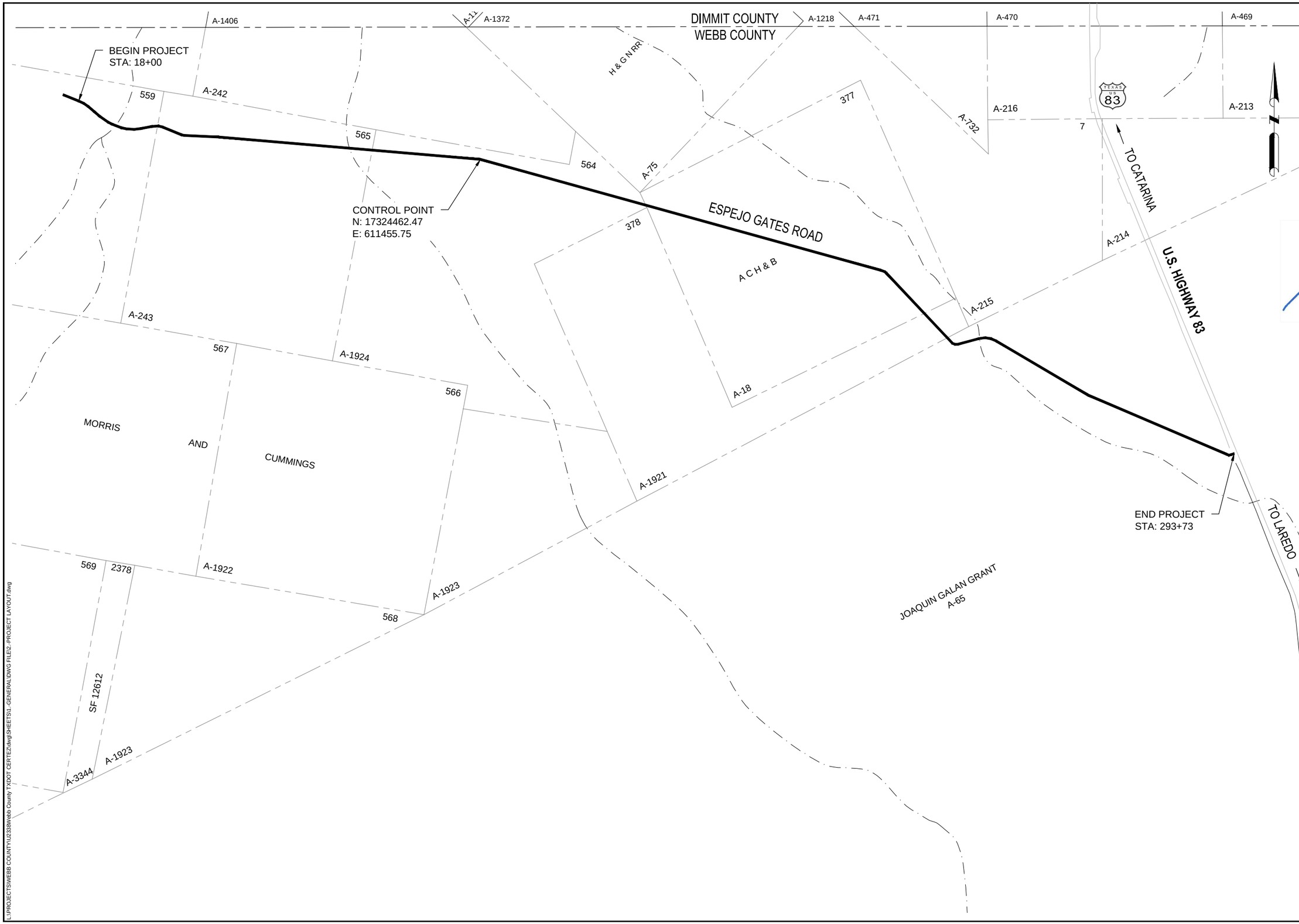

L:\PROJECTS\WEBB COUNTY\U2338Webb County TXDOT CERTEZ\dwg\SHEETS\1-GENERAL\DWG FILE\2-PROJECT LAYOUT.dwg

NO.	DATE	REVISION DESCRIPTION
1	---	---
2	---	---

PLOTTED 06-06-2016

STATUS FINAL

STATE OF TEXAS
FRANCISCO RAMOS
108833
LICENSED
PROFESSIONAL ENGINEER

6/6/2016

DRAWN BY J.S.

CHECKED BY F.R.

S&B INFRASTRUCTURE, LTD.
2120 BLAINE ST. SUITE 100 LAREDO, TEXAS 78043
TELEPHONE: (956) 568-2561 FAX: (956) 994-0427
ENGINEERING # F-1582 SURVEYING # 10193914

ESPEJO GATES ROAD
WEBB COUNTY, TEXAS

PROJECT LAYOUT

DESIGNED: -

APPROVED: -

DRAWING FILE NAME 2 -PROJECT LAYOUT

SHEET NUMBER 2 OF 152

GENERAL NOTES:

1. ALL PITS OR QUARRIES, SHALL COMPLY WITH "TEXAS AGGREGATE QUARRY AND PIT SAFETY ACT."

2. ALL EXCESS MATERIAL SHALL BE HAULED AND STOCKPILED ON COUNTY PROPERTY, COORDINATE WITH ENGINEER AND THE WEBB COUNTY ENGINEERING DEPARTMENT.

3. THE CONTRACTOR MUST COMPLY WITH ALL OCCUPATIONAL SAFETY AND HEALTH ADMINISTRATION (OSHA) STANDARDS.

4. CONTRACTOR SHALL ADJUST TO PROPOSED FINISHED GRADE ALL EXISTING VALVES, MANHOLES, MANHOLE COVERS, CLEANOUTS, INLET COVERS AND/OR ANY OTHER OBJECTS WITHIN THE PROJECT AREA, IF APPLICABLE.

5. CONTRACTOR SHALL SAW-CUT AND/OR ADJUST EXISTING PAVEMENT AS NECESSARY TO ASSURE A SMOOTH AND CONTINUOUS TRANSITION GRADE.

6. ALL EXISTING PAVEMENT BASE MATERIAL SHALL BE REMOVED BY CONTRACTOR AND PLACED IN AN AREA BY THE COUNTY OR ENGINEER WHERE IT CAN BE EASILY ACCESSED FOR FUTURE USE; CARE SHOULD BE TAKEN NOT TO CONTAMINATE SAID BASE MATERIAL.

7. AT EXISTING ROADWAY TIES, THE CONTRACTOR SHALL SCHEDULE WORK SO THAT PLACEMENT OPERATIONS WILL FOLLOW THE SUB GRADE WORK AS CLOSELY AND AS PRACTICAL IN ORDER TO REDUCE HAZARD TO THE TRAVELING PUBLIC AND PREVENT UNDUE PAVEMENT DAMAGE FROM WET WEATHER.

8. THE CONTRACTOR SHALL FURNISH AND INSTALL STOP SIGNS, STREET SIGNS AND OTHER REGULATORY SIGNS. THE LOCATIONS OF THE SIGNS SHALL BE DETERMINED BY THE ENGINEER AND APPROVED BY THE COUNTY. WEBB COUNTY MAY ELECT TO IMPROVE ON APPROPRIATE SIGNAGE STOP SIGNS, STREET SIGNS, SPEED LIMIT SIGNS; DECISIONS REGARDING SUCH IMPROVEMENTS WILL BE LEFT TO THE DISCRETION OF WEBB COUNTY.

9. ACCESS TO ALL DRIVES AND SIDE ROADS, BOTH PUBLIC AND PRIVATE, ARE TO BE MAINTAINED AND ACCESSIBLE AT ALL TIMES.

10. AS REQUIRED BY THE "TEXAS UNDERGROUND FACILITY DAMAGE PREVENTION AND SAFETY ACT", TEXAS ONE CALL MUST BE CONTACTED (800-245-4545) AT LEAST 48 HOURS PRIOR TO ANY EXCAVATION OPERATIONS PERFORMED. IT IS THE CONTRACTORS RESPONSIBILITY TO CONTACT TEXAS ONE CALL SYSTEM.

11. THE CONTRACTOR'S ATTENTION IS DIRECTED TO THE FACT THAT BOTH OVERHEAD AND UNDERGROUND UTILITIES EXIST IN THE VICINITY OF THE CONSTRUCTION AREA. THE EXACT LOCATION OF UNDERGROUND UTILITIES IS NOT CERTAIN. THE CONTRACTOR SHALL CONTACT THE APPROPRIATE AREA UTILITY COMPANIES FOR EXACT LOCATIONS AT LEAST 48 HOURS PRIOR TO CONSTRUCTION OR COMMENCING ANY WORK SO AS TO PREVENT ANY DAMAGE OR INTERFERENCE WITH PRESENT UTILITIES.

12. DURING THE EXECUTION OF THE WORK, UTMOST CARE SHALL BE EXERCISED TO PREVENT DAMAGE TO ANY UTILITIES, STRUCTURES OR RIGHT-OF-WAY. THE CONTRACTOR SHALL BE RESPONSIBLE FOR CONTACTING, LOCATING AND PROTECTING ALL UNDERGROUND UTILITIES OR STRUCTURES. ANY DAMAGE TO EXISTING UTILITIES OR STRUCTURES SHALL BE REPAIRED PROMPTLY, AT THE CONTRACTORS EXPENSE. IF IN THE COURSE OF THE WORK, UNDERGROUND UTILITIES OR STRUCTURES ARE ENCOUNTERED AND ARE IN CONFLICT WITH THE WORK, THE CONTRACTOR SHALL CONTACT THE ENGINEER WHO WILL DIRECT THE NECESSARY ADJUSTMENTS.

13. THE CONTRACTOR SHALL PROTECT ALL AREAS OF THE RIGHT-OF-WAY WHICH ARE NOT INCLUDED IN THE ACTUAL LIMITS OF THE PROPOSED CONSTRUCTION AREAS FROM DESTRUCTION. CARE SHALL BE EXERCISED TO PREVENT DAMAGE TO TREES, VEGETATION AND OTHER NATURAL SURROUNDINGS. THE AREAS NOT DISTURBED SHALL BE DETERMINED BY THE ENGINEER. THE CONTRACTOR, AT HIS EXPENSE, SHALL RESTORE TO ANY AREAS DISTURBED AS A RESULT OF THEIR OPERATIONS TO A CONDITION AS GOOD AS, OR BETTER THAN, THAT PRESENT PRIOR TO THEIR CONTRACT.

14. ERECTION AND/OR REMOVAL OF POLES AND LUMINARIES LOCATED NEAR ANY OVERHEAD OR UNDERGROUND ELECTRICAL LINES SHALL BE ACCOMPLISHED USING ESTABLISHED INDUSTRY AND UTILITY SAFETY PRACTICES. THE CONTRACTOR SHALL CONSULT WITH THE APPROPRIATE UTILITY COMPANY PRIOR TO BEGINNING SUCH WORK.

15. IF ANY OVERHEAD OR UNDERGROUND ELECTRICAL LINES NEED TO BE DE-ENERGIZED, THE CONTRACTOR SHALL CALL THE POWER COMPANY TO DO THIS WORK. ANY COST ASSOCIATED WITH DE-ENERGIZING THE ELECTRICAL LINES AND/OR ANY OTHER PROTECTIVE MEASURES REQUIRED SHALL BE AT THE CONTRACTOR'S EXPENSE.

16. WHEN THE CONTRACTOR IS WORKING NEAR ANY POWER LINES, IT IS THEIR RESPONSIBILITY TO COMPLY WITH THE APPROPRIATE SECTIONS OF TEXAS STATE LAW AND FEDERAL REGULATIONS RELATING TO THE TYPE OF WORK INVOLVED.

17. WEBB COUNTY MAY ELECT TO IMPROVE ON APPROPRIATE SILT FENCING LAYOUT AS SHOWN; DECISIONS REGARDING SUCH IMPROVEMENTS WILL BE LEFT TO THE DISCRETION OF SAID ENTITY. THE COUNTY SHALL CONSULT WITH ENGINEER PRIOR TO ANY MODIFICATIONS TO THE SILT FENCING LAYOUT.

18. RIGHT-OF-WAY LINES SHOWN ARE SOLELY FOR REPRESENTATION ONLY; THESE PLANS DO NOT ATTEMPT TO REESTABLISH OR CONFIRM ANY PROPERTY OR EASEMENT LINES.

19. CONTRACTOR IS RESPONSIBLE TO PROVIDE CONSTRUCTION STAKING FOR THE PROJECT. COORDINATE WITH PROJECT ENGINEER FOR EXISTING PROJECT SURVEY CONTROL.

20. THE ESTIMATED QUANTITIES PUBLISHED WITH THESE CONSTRUCTION DOCUMENTS ARE FURNISHED AS AN AID IN THE BIDDING PROCESS AND ARE NOT TO BE SUBSTITUTED FOR CONTRACTORS QUANTITY TAKEOFFS.

21. THE CONTRACTOR SHALL IMMEDIATELY NOTIFY THE ENGINEER OF ANY OBSTACLES THAT MAY IMPEDE OR PREVENT THE PROPER CONSTRUCTION OF THE PROJECT.

22. THE CONTRACTOR SHALL ARRANGE THE OPERATION IN SUCH A MANNER AS TO AVOID UNNECESSARY INCONVENIENCE TO THE PUBLIC IN CONSTRUCTION AREAS.

23. CONTRACTOR SHALL MAINTAIN THE JOB SITE IN A SAFE, NEAT AND WORKMAN-LIKE MANNER AT ALL TIMES. JOB SITE SAFETY SHALL NOT BE COMPROMISED. ANY UNATTRACTIVE NUISANCE SHALL BE REMOVED OR CAMOUFLAGED BY CONTRACTOR WHEN DIRECTED BY THE COUNTY OR ENGINEER. CONTRACTOR SHALL REMOVE OR CAMOUFLAGE ANY CHILD ATTRACTIVE NUISANCE.

24. BLASTING WITHIN THE PROJECT AREA WILL NOT BE ALLOWED.

25. THE CONTRACTOR SHALL BE RESPONSIBLE FOR ALL COORDINATION BETWEEN THEM AND OTHER CONTRACTORS AND UTILITIES IN THE VICINITY OF THIS PROJECT. THIS INCLUDES, BUT NOT LIMITED TO GAS, WATER, WASTEWATER, ELECTRICAL, TELEPHONE, COMMUNICATIONS NETWORKS, CABLE TELEVISION, FIBER OPTIC CABLE, PETROLEUM PIPELINES AND DRAINAGE UTILITIES. ONCE THE CONTRACTOR BECOMES AWARE OF A POSSIBLE CONFLICT, IT IS THE CONTRACTOR'S RESPONSIBILITY TO NOTIFY THE COUNTY AND ENGINEER WITHIN TWENTY-FOUR (24) HOURS.

26. TRUCKS DELIVERING HMAC MATERIAL TO THE ROADWAY SHALL BE SUFFICIENT IN NUMBER TO ENSURE CONTINUOUS OPERATION.

REVISION		
NO.	DATE	DESCRIPTION
1	---	---
2	---	---

PLOTTED 6-6-2016

STATUS FINAL

STATE OF TEXAS
FRANCISCO RAMOS
108833
LICENSED PROFESSIONAL ENGINEER

DRAWN BY F.R. | CHECKED BY J.A.M.

6/6/2016

S&B INFRASTRUCTURE, LTD.
2120 BLAINE ST. LAREDO, TEXAS 78043
TELEPHONE: (956) 568-2561 FAX: (956) 994-0027
ENGINEERING # F-1582 SURVEYING # 10193914

ESPEJO GATES IMPROVEMENTS
WEBB COUNTY, TEXAS

GENERAL NOTES

REFERENCE FILE NAME
-
DRAWING FILE NAME
General Notes and SMALL SIGNS

L:\PROJECTS\WEBB COUNTY\2238\Webb County 7-ADOT CERTIFIC\dwg\SHEETS\1-GEN\BASLDWG FILE\General Notes and SMALL SIGNS.dwg

ITEM 134 BACKFILLING PAVEMENT EDGES

BACKFILL TYPE A SHALL NOT CONTAIN PARTICLES MORE THAN TWO INCHES IN SIZE AND SHALL HAVE A MINIMUM PI OF 10 AND A MAXIMUM PI OF 20.

ITEM 247 FLEXIBLE BASE

FLEX BASE SHOULD MEET THE REQUIREMENTS OF THE TXDOT SPECIFICATIONS FOR ITEM 247, TYPE B, GRADE 1 -2. THE BASE SHOULD BE COMPACTED TO AT LEAST 98% OF THE MAXIMUM DRY DENSITY AS DETERMINED BY TSODT METHOD TEX 113-E, AT +/- 2% OF OPTIMUM MOISTURE CONTENT.

THE CONTRACTOR'S ATTENTION IS CALLED TO THE FACT THAT CERTAIN EXISTING AND/OR PROPOSED STRUCTURES MAY BE WITHIN THE LIMITS OF THE FLEXIBLE BASE. IT SHALL BE THE CONTRACTOR'S RESPONSIBILITY TO PERFORM CONSTRUCTION OPERATIONS WITHOUT DAMAGE TO THESE STRUCTURES.

FOR WATER ADDED UNDER ITEM 247, THE SULFATE CONTENT WILL NOT EXCEED 3000-PPM AND CHLORIDE CONTENT WILL NOT EXCEED 3000-PPM.

ITEM 260 LIME TREATMENT (ROAD MIXED)

THE LIME STABILIZED SUBGRADE SHALL MEET THE REQUIREMENTS OF THE TXDOT SPECIFICATIONS FOR ITEM 260 AND TO BE STABILIZED WITH A MINIMUM OF THREE (3) PERCENT LIME AND IN AREAS WITH PI>/= 20 A MINIMUM OF FOUR (4) PERCENT LIME SHALL BE UTILIZED. THE SUBGRADE SHALL BE ROAD-MIXED AND COMPACTED TO A MINIMUM OF 95% OF THE OPTIMUM DRY DENSITY AS DETERMINED BY TXDOT METHOD TEX 121-E, AT +/- 2% OF THE OPTIMUM MOISTURE CONTENT AT 6" LIFTS.

THE CONTRACTOR'S ATTENTION IS CALLED TO THE FACT THAT CERTAIN EXISTING AND/OR PROPOSED STRUCTURES ARE WITHIN THE LIMITS OF THE LIME-TREATED SUBGRADE. UNLESS OTHERWISE DIRECTED BY THE ENGINEER, THESE STRUCTURES SHALL BE INSTALLED BEFORE THE FINAL ROLLING OF THIS SUBGRADE, IT SHALL BE THE CONTRACTOR'S RESPONSIBILITY TO PERFORM THE PROPER LIME TREATING OPERATION WITHOUT DAMAGE TO THESE STRUCTURES.

THE SLURRY METHOD OF APPLYING LIME WILL BE REQUIRED, EXCEPT WHEN THE LIME IS TO ADDED TO NATURALLY WET MATERIALS AS DIRECTED BY THE ENGINEER.

FOR THIS PROJECT, THE ENGINEER WILL DIRECT A RANDOM NUMBER OF LIME TRUCKS TO BE CHECK WEIGHTED.

ITEM 251 REWORKING BASE COURSES

QUANTITIES OF FLEXIBLE BASE TO BE SALVAGED, SHOWN ON THE TYPICAL SECTIONS, ARE FOR ESTIMATING PURPOSED ONLY. ALL ACCEPTABLE BASE MATERIAL ENCOUNTERED IN EXISTING BASE IS TO BE SALVAGED AS DIRECTED BY THE ENGINEER REGARDLESS OF THE QUANTITIES INVOLVED.

ITEM 310 PRIME COAT

THE CONTRACTOR SHALL EXERCISE DILIGENCE IN THE APPLICATION OF ASPHALT BY THE USE OF FLAGGING AND ROLLING PROCEDURES TO KEEP FROM SPRAYING OR SPLATTERING THE TRAVELING PUBLIC WITH ASPHALTIC MATERIAL.

DO NOT APPLY SUBSEQUENT COURSES OVER THE INITIAL PRIME COAT ANY EARLIER THAN THE DAY AFTER PRIME COAT WAS APPLIED, UNLESS OTHERWISE AUTHORIZED OR DIRECTED BY ENGINEER.

ITEM 340 DENSE GRADED HOT MIX ASPHALT (SMALL QUANTITY)

THE HOT MIX ASPHALTIC CONCRETE (HMAC) SHALL MEET THE REQUIREMENTS SET FORTH IN TXDOT SPECIFICATIONS ITEM 304, USING TYPE "C" OR "D" MIX. THE ASPHALTIC CONCRETE SHOULD BE COMPACTED TO A MINIMUM OF 1.5% BELOW THE OPTIMUM DENSITY OF THE LABORATORY DENSITY AS DETERMINED USING TXDOT, TEX 206-F TEST METHOD OR ASTM D-1560 (HVEEN OR MARCHAL METHOD).

ITEM 644 SMALL ROADSIDE SIGN SUPPORTS AND ASSEMBLIES

ALL SIGNS SHALL BE INSTALLED AS SHOWN IN THE PLANS AND IN ACCORDANCE WITH THE CURRENT EDITION OF THE "TEXAS MANUAL ON UNIFORM TRAFFIC CONTROL DEVICES".

FOR THIS PROJECT, ALUMINUM TYPE SIGN BLANKS AS PROVIDED UNDER ITEM 635 WILL BE REQUIRED FOR ALL PROPOSED SIGNAGE INSTALLED UNDER ITME 644. ALUMINUM SIGN BLANKS LESS THAN 7.5 SQUARE FEET SHALL BE 0.08 INCH THICK, SIGN BLANKS 7.5 TO 15 SQUARE FEET SHALL BE 0.10 INCH AND SIGN BLANKS GREATER THAN 15 SQUARE FEET SHALL BE 0.125 INCH THICK.

ITEM 1332 EMBANKMENT

EMBANKMENT (DENS CONT) SHALL BE TY C WITH A MAX. PI OF 40.

IT IS THE CONTRACTOR'S RESPONSIBILITY TO ADVISE THE ENGINEER OF THE LOCATION OF THE SOURCE SUFFICIENTLY IN ADVANCE TO AVOID DELAY.

ITEM 164 SEEDING FOR EROSION CONTROL

DURING DRILL SEEDING OPERATIONS, APPLICATION METHODS SHALL BE IN ACCORDANCE WITH THE METHOD SHOWN IN THE STANDARD SPECIFICATIONS BOOK.

SS-1 TACKING AGENT SHALL BE RATIO OF 2:1, TWO (EMULSION) TO ONE (WATER) AND APPLIED AT A RATE OF 0.05 GALLONS PER SQUARE YARD. THE SS-1 TACKING AGENT REQUIRED FOR DRILL SEED OPERATIONS, WILL NOT BE PAID FOR DIRECTLY, BUT WILL BE SUBSIDIARY TO ITEM 164 "DRILL SEEDING". WATERING SHALL NOT BE SUED WITH THE DRILL SEED METHOD.

COOL SEASON OR WARM SEASON GRASSES SHALL BE INCLUDED AS PART OF ITEM 164 (SEE TABLE 3 AND/OR TABLE 4 IN THE STANDARD SPECIFICATION MANUAL FOR DATES AND SEED TYPE).
SEED MIXTURE

SEED MIXTURE SHALL BE AS SPECIFIED UNDER ITEM 164.

REVISION		
NO.	DATE	DESCRIPTION
1	---	---
2	---	---

PLOTTED 6-6-2016

STATUS FINAL

STATE OF TEXAS
FRANCISCO RAMOS
108833
LICENSED PROFESSIONAL ENGINEER

DRAWN BY F.R. | CHECKED BY J.A.M.

6/6/2016

S&B INFRASTRUCTURE, LTD.
2120 BLAINE ST. LAREDO, TEXAS 78043
TELEPHONE: (956) 568-2561 FAX: (956) 994-0227
ENGINEERING # F-1582 SURVEYING # 10193914

ESPEJO GATES IMPROVEMENTS
WEBB COUNTY, TEXAS

GENERAL NOTES

REFERENCE FILE NAME
-
DRAWING FILE NAME
General Notes and SMALL SIGNS

L:\PROJECTS\WEBB COUNTY\2233\Webb County 7-DOT CERTIFIC\dwg\SHEETS\1-GENERAL\DWG FILE\General Notes and SMALL SIGNS.dwg

ITEM 432 RIP RAP

PROVIDE CLASS "A" CONCRETE MINIMUM FOR RIPRAP APRONS PLACED AROUND ALL BOX CULVERT AND PIPE SAFETY END TREATMENTS.

ITEM 462 CONCRETE BOX CULVERTS AND STORM DRAINS

PROVIDE JOINTS IN PRE-CAST CONCRETE BOX CULVERTS USING ANY OF THE METHODS SPECIFIED IN ITEM 464, EXCEPT MORTAR JOINTS.

PROVIDE PRE-CAST CONCRETE BOXES TO EXPEDITE TRAFFIC HANDLING UNLESS OTHERWISE SHOWN ON THE PLANS.

PROVIDE THE ENGINEER WITH THE CASTING SCHEDULE OF ALL PRE-CAST CONCRETE BOXES PRIOR TO BEGINNING ANY FABRICATION.

ITEM 464 REINFORCED CONCRETE PIPE

USE TONGUE AND GROOVE PIPE WHERE THE RCP EXTENDS INTO THE SUBGRADE. THE 4-FOOT DEPTH RESTRICTION FOR HEAVY EQUIPMENT PASSAGE OVER PIPE STRUCTURE IS VOIDED. THE CONTRACTOR WILL BE RESPONSIBLE FOR ANY CONSTRUCTION DAMAGE TO THESE FACILITIES

DO NOT USE MORTAR JOINTS.

ALL REINFORCED CONCRETE PIPE SHALL INCLUDE RUBBER GASKETS UNLESS SHOWN OTHERWISE ON THE PLANS OR DIRECTED BY THE ENGINEER.

ITEM 467 SAFETY END TREATMENT

ALL TYPES II SET'S SHALL HAVE RIPRAP, CLASS "A" MINIMUM, APRONS AS SHOWN ON THE PLANS. THE CONTRACTOR MAY SUBMIT AN ALTERNATE PRECAST SET DESIGN FOR APPROVAL BY THE ENGINEER.

ITEM 502 BARRICADES, SIGNS, AND TRAFFIC HANDLING

SHADOW VEHICLES EQUIPPED WITH TRUCK-MOUNTED ATTENUATORS ARE REQUIRED.

A PILOT CAR AND RADIO EQUIPPED FLAGERS SHALL BE REQUIRED FOR ALL UNDIVIDED ROADWAY LOCATIONS AS DIRECTED BY THE ENGINEER. THE PILOT CAR WITH NECESSARY FLAGGERS AND/OR RADIO EQUIPPED FLAGGERS AND ALL SIGNS, EQUIPMENT, LABOR AND INCIDENTALS REQUIRED FOR THIS METHOD OF TRAFFIC CONTROL WILL NOT BE PAID FOR DIRECTLY, BUT SHALL BE CONSIDERED SUBSIDIARY TO ITEM 502,

REPLACEMENT.RELOCATE ALL REGULATORY SIGNS REMOVED DUE TO CONSTRUCTION OPERATIONS WITH THE SAME SIGN ON FIXED SUPPORTS IMMEDIATELY UPON REMOVAL. FIRST OBTAIN PROJECT ENGINEER APPROVAL BEFORE REMOVING ANY REGULATORY ROADWAY SIGN. REQUIRED FLAGGERS ARE TO BE AVAILABLE TO DIRECT TRAFFIC DURING SIGN INTERMEDIATE DOWN TIME.

RELOCATE ANY DIRECTIONAL SIGN ASSEMBLIES REMOVED DURING CONSTRUCTION OPERATIONS IMMEDIATELY UPON THEIR REMOVAL.

THESE SIGNS SHALL BE RELOCATED TO A LOCATION IN ACCORDANCE WITH THE LATEST VERSION OF THE "TEXAS MANUAL ON UNIFORM TRAFFIC CONTROL DEVICES". IN NO CASE WILL A SIGN BE REMOVED WITHOUT A REPLACEMENT SIGN AND SUPPORT BEING READILY AVAILABLE AND A LOCATION ESTABLISHED. REMOVAL AND RELOCATION OF THESE SIGNS REQUIRED FOR TRAFFIC CONTROL WILL NOT BE PAID FOR DIRECTLY, BUT SHALL BE CONSIDERED SUBSIDIARY TO ITEM 502.

ITEM 508 CONSTRUCTING DETOURS

FLEXIBLE BASE, PRIME COAT, AND ASPHALTIC CONCRETE PAVEMENT USED FOR DETOURS SHALL MEET THE REQUIREMENTS OF ITEMS 247, 310, AND 340 RESPECTIVELY, EXCEPT MEASUREMENT AND PAYMENT.

ITEM 540 METAL BEAM GUARD FENCE

THE OPTIONAL TERMINAL ANCHOR POST WITH THE TERMINAL CONNECTOR WILL BE REQUIRED AS SHOWN ON THE METAL BEAM GUARD FENCE STANDARD.

ITEM 658 DELINEATOR AND OBJECT MARKER ASSEMBLIES

DELINEATOR ASSEMBLIES SHALL BE INSTALLED 8 FEET FROM THE EDGE OF THE SHOULDER UNLESS RESTRICTED BY SOME OBSTRUCTION, IN WHICH CASE, THE DELINEATOR ASSEMBLY SHALL BE PLACED BETWEEN 2 AND 8 FEET FROM THE EDGE OF THE SHOULDER.

BI-DIRECTIONAL INSTALLATION OF OBJECT MAKERS SHALL BE BY ANY SATISFACTORY METHOD.

ITEM 666 REFLECTORIZED PAVEMENT MARKINGS

ALL PERMANENT PAVEMENT MARKING FOR THIS PROJECT SHALL BE 0.100 INCHES (100MIL) THICK THERMOPLASTIC.

ALL PERMANENT PAVEMENT MARKING LACKING REFLECTIVITY IN ACCORDANCE WITH TEST METHOD TEX 828-B, WILL NOT BE PAID FOR. THE ROADWAY WILL BE RE-STRIPED AT NO ADDITIONAL COMPENSATION.

PAVEMENTS SURFACE PREPARATIONS FOR MARKING AND MARKERS WILL NOT BE PAID FOR DIRECTLY, BUT SHALL BE CONSIDERED SUBSIDIARY TO ITEM 666.

PRIOR TO ANY STRIPING OPERATIONS, AN ON-SITE COORDINATION MEETING BETWEEN ALL THE PARTIES INVOLVED WILL BE REQUIRED TO REVIEW STRIPING DETAILS AN REQUIREMENTS TO ENSURE QUALITY WORK,

THE BEADS USED ON THIS PROJECT SHALL MEET THE REQUIREMENTS OF DMS-8290, GLASS TRAFFIC BEADS TEXAS TYPE II AND III. USE A 50% TYPE II/ 50% TYPE III MIX UTILIZING A DOUBLE DROP SYSTEM WITH TYPE III BEADS DROPPED FIRST.

REVISION		
NO.	DATE	DESCRIPTION
1	---	---
2	---	---

PLOTTED 6-6-2016

STATUS FINAL

STATE OF TEXAS
FRANCISCO RAMOS
108833
LICENSED PROFESSIONAL ENGINEER

DRAWN BY F.R. | CHECKED BY J.A.M.

6/6/2016

S&B INFRASTRUCTURE, LTD.
2120 BLAINE ST. LAREDO, TEXAS 78043
TELEPHONE: (956) 568-2561 FAX: (956) 994-0227
ENGINEERING # F-1582 SURVEYING # 10193914

ESPEJO GATES IMPROVEMENTS
WEBB COUNTY, TEXAS

GENERAL NOTES

REFERENCE FILE NAME
-
DRAWING FILE NAME
General Notes and SMALL SIGNS

L:\PROJECTS\WEBB COUNTY\U233\Webb County TxDOT CERTIFD\dwg\SHEETS\1-GEN\EPA\DWG FILE\General Notes and SMALL SIGNS.dwg

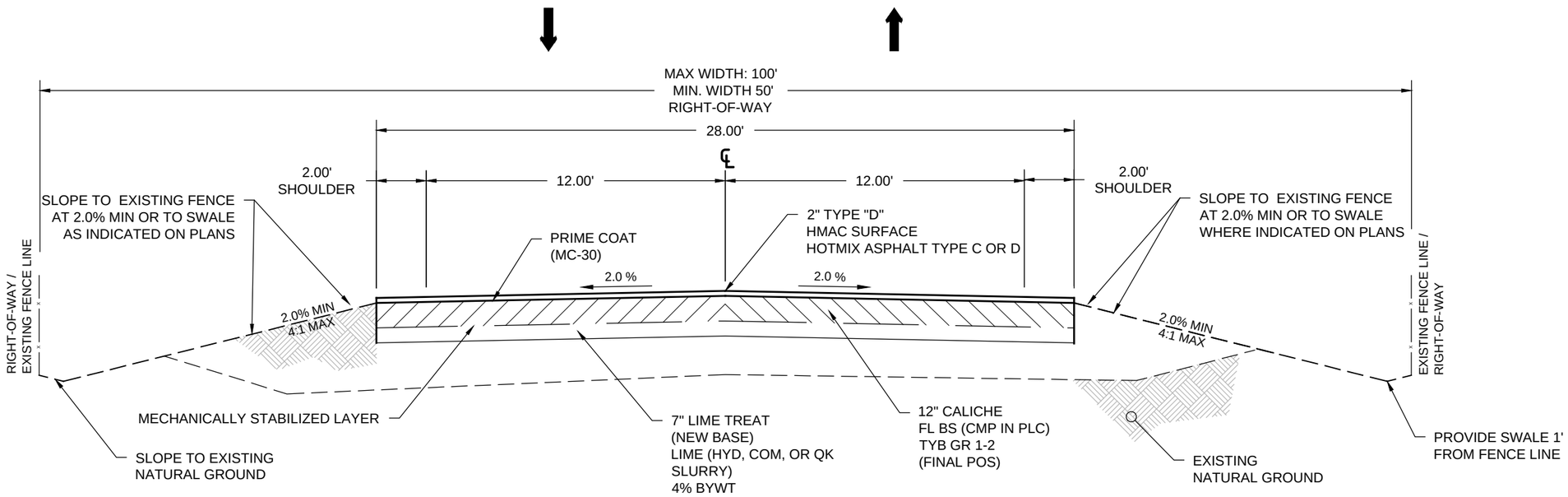

PROPOSED TYPICAL SECTION

SCALE: 1" = 5'

L:\PROJECTS\WEBB COUNTY\U2338\Webb County TXDOT CERTEZ\dwg\SHEETS\1.-GENERAL\DWG FILE\PROPOSED TYPICAL SECTIONS.dwg

NO.	DATE	REVISION DESCRIPTION
1	---	---
2	---	---

PLOTTED 6-6-2016

STATUS FINAL

STATE OF TEXAS
FRANCISCO RAMOS
108833
LICENSED
PROFESSIONAL ENGINEER

DRAWN BY O.C.

CHECKED BY F.R.

6/6/2016

S&B INFRASTRUCTURE, LTD.
2120 BLAINE STREET LAREDO, TEXAS 78043
TELEPHONE: (956) 568-2561 FAX: (956) 994-0027
ENGINEERING # F-1582 SURVEYING # 10193914

ESPEJO GATES
WEBB COUNTY, TEXAS

PROPOSED
TYPICAL SECTIONS

REFERENCE FILE NAME
-

DRAWING FILE NAME
PROPOSED TYPICAL SECTIONS

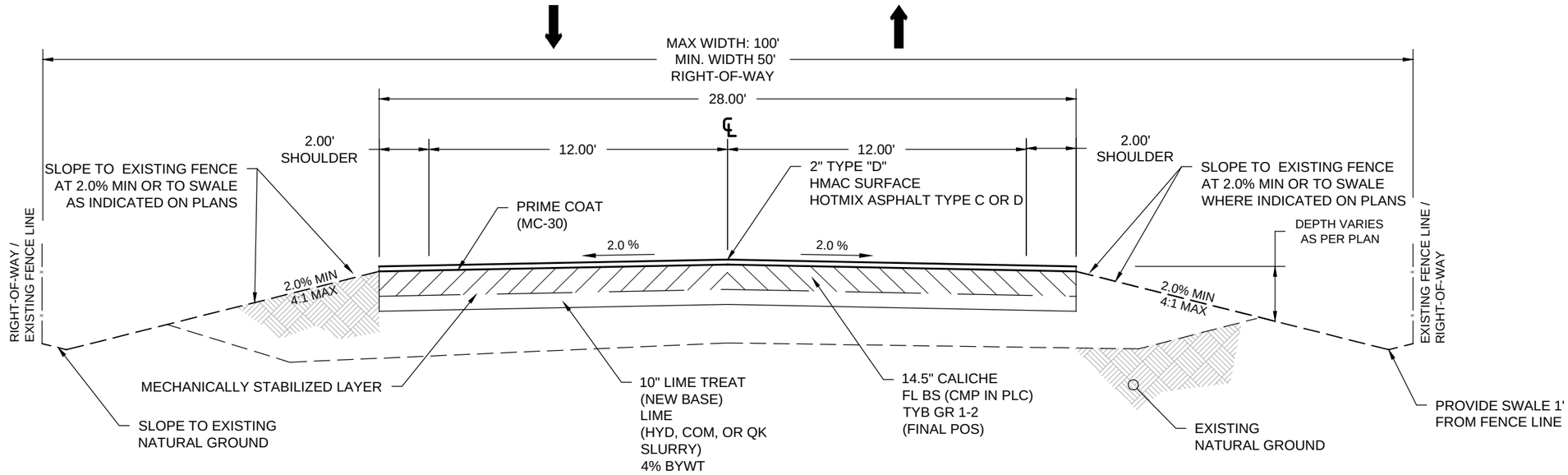

PROPOSED ALTERNATE 1 TYPICAL SECTION

SCALE: 1" = 5'

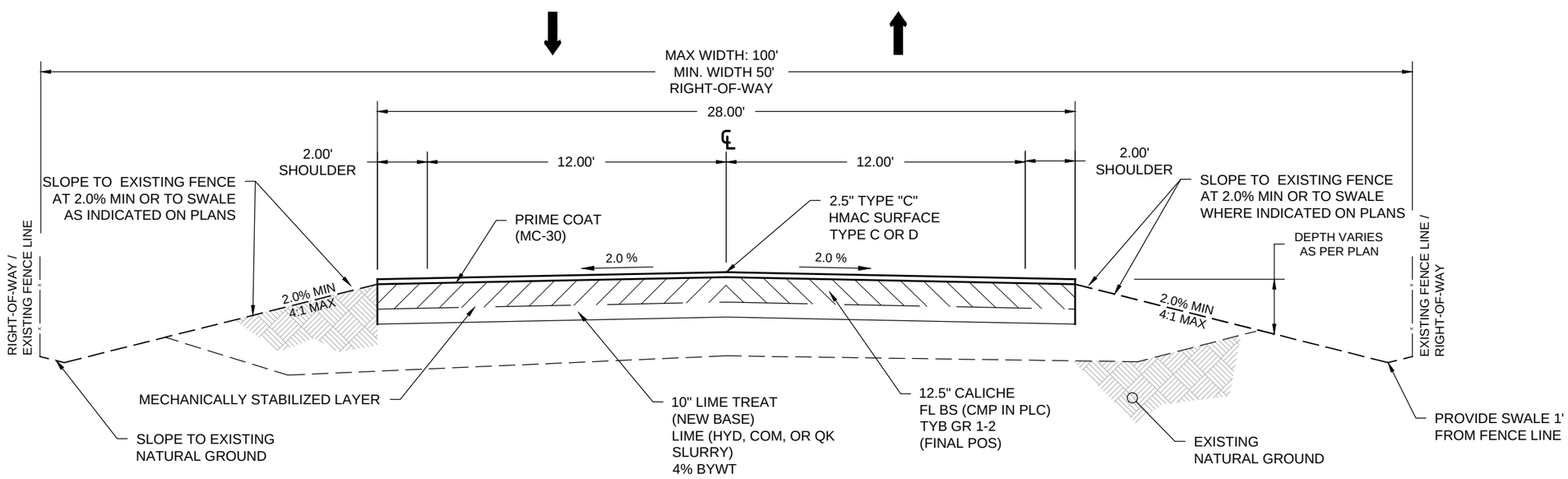

PROPOSED ALTERNATE 2 TYPICAL SECTION

SCALE: 1" = 5'

L:\PROJECTS\WEBB COUNTY\U2338\Webb County TXDOT CERTEZ\dwg\SHEETS\1-GENERAL\DWG FILE\PROPOSED TYPICAL SECTIONS.dwg

NO.	DATE	REVISION DESCRIPTION
1	---	---
2	---	---

PLOTTED 6-6-2016

STATUS FINAL

STATE OF TEXAS
FRANCISCO RAMOS
108833
LICENSED
PROFESSIONAL ENGINEER

DRAWN BY O.C. CHECKED BY F.R.

6/6/2016

S&B INFRASTRUCTURE, LTD.
2120 BLAINE STREET LAREDO, TEXAS 78043
TELEPHONE: (956) 568-2561 FAX: (956) 994-0027
ENGINEERING # F-1582 SURVEYING # 10193914

ESPEJO GATES
WEBB COUNTY, TEXAS

PROPOSED
TYPICAL SECTIONS

REFERENCE FILE NAME

DRAWING FILE NAME
PROPOSED TYPICAL SECTIONS

ESPEJO GATES ROADWAY SUMMARY

STREET NAME	LIMITS OF PROPOSED IMPROVEMENTS		WIDTH		LENGTH		AREA		100-6002 PREP ROW		204-6003 SPRINKLING (DUST CONTROL) (3 MG/STA)		260-6045 LIME TRT (NEW BASE) 7"		260-6016 LIME (HYD, COM, OR QK SLURRY) 4% BYWT		0247-6041 FL BS (CMP IN PLC) TYB GR 1-2 (FINAL POS) 12"		310-6009 PRIME COAT (MC-30) 0.3 GAL/SY		340-6245 D-GR HMA(SQ) TY-C OR D PG64-22 LVL-UP 2"= 228# PER SY		360-6011 CONC PVMT (REINF-CPCP) 8.5"	
													BASE MATERIAL						OVERLAY					
	FROM	TO	(FT)		(FT)		(SY)		STA		(MG)		(SY)		(TON)		(CY)		(GAL)		(TON)		(SY)	
ESPEJO GATES	18+00 - 293+45.64		EST	FINAL	EST	FINAL	EST	FINAL	EST	FINAL	EST	FINAL	EST	FINAL	EST	FINAL	EST	FINAL	EST	FINAL	EST	FINAL		
	18+00.00	19+88.29	28		188.29		585.79		1.88		5.65		585.79		10.98		195.26		193.31		80.14			
	19+88.29	20+13.24	28		24.95		77.62		0.25		0.75												77.62	
	20+86.76	21+11.71	28		24.95		77.62		0.25		0.75												77.62	
	21+11.71	23+03.02	28		191.31		595.19		1.91		5.74		595.19		11.16		198.40		196.41		81.42			
	23+03.02	23+27.97	28		24.95		77.62		0.25		0.75												77.62	
	24+01.53	24+27.27	28		25.74		80.08		0.26		0.77												80.08	
	24+27.27	66+88.92	28		4,261.65		13,258.47		42.62		127.85		13,258.47		248.60		4,419.49		4375.29		1813.76			
	66+88.92	67+13.91	28		24.99		77.75		0.25		0.75												77.75	
	67+41.25	67+66.25	28		25.00		77.78		0.25		0.75												77.78	
	67+66.25	73+40.16	28		573.91		1,785.50		5.74		17.22		1,785.50		33.48		595.17		589.21		244.26			
	73+40.16	73+65.16	28		25.00		77.78		0.25		0.75												77.78	
	73+97.50	74+22.49	28		24.99		77.75		0.25		0.75												77.75	
	74+22.49	116+46.93	28		4224.44		13,142.70		42.24		126.73		13,142.70		246.43		4,380.90		4337.09		1797.92			
	116+46.93	116+71.93	28		25.00		77.78		0.25		0.75												77.78	
	116+80.51	117+05.51	28		25.00		77.78		0.25		0.75												77.78	
	117+05.51	160+20.84	28		4315.33		13,425.47		43.15		129.46		13,425.47		251.73		4,475.16		4430.41		1836.60			
	160+20.84	160+45.83	28		24.99		77.75		0.25		0.75												77.75	
	160+54.17	160+79.16	28		24.99		77.75		0.25		0.75												77.75	
	160+79.16	229+15.77	28		6836.61		21,269.45		68.37		205.10		21,269.45		398.80		7,089.82		7018.92		2909.66			
	229+15.77	229+40.77	28		25.00		77.78		0.25		0.75												77.78	
	229+66.53	229+91.53	28		25.00		77.78		0.25		0.75												77.78	
	229+91.53	291+89.65	28		6198.12		19,283.04		61.98		185.94		19,283.04		361.56		6,427.68		6363.40		2637.92			
	291+89.65	293+45.64	Varies		155.99		836.34		1.56		4.68		836.34		15.68				30.67		12.71		836.34	
	PROJECT TOTAL				**27,296.20**		**85,272.55**		**272.96**		**818.89**		**84,181.95**		**1,578.41**		**27,781.87**		**27,534.72**		**11,414.39**		**1,926.94**	

REVISION NO.	DATE	DESCRIPTION
1	---	---
2	---	---

PLOTTED 6-6-2016

STATUS FINAL

DRAWN BY F.R. | CHECKED BY J.A.M.

S&B
S&B INFRASTRUCTURE, LTD.
4001 MCPHERSON SUITE 204 LAREDO, TEXAS 78041
TELEPHONE: (956) 568-2561 FAX: (956) 994-0427
ENGINEERING # F-1582 SURVEYING # 10193914

ESPEJO GATES IMPROVEMENTS
WEBB COUNTY, TEXAS

SUMMARY TABLES OF ESTIMATED QUANTITIES

REFERENCE FILE NAME
-
DRAWING FILE NAME
General Notes and SMALL SIGNS

L:\PROJECTS\WEBB COUNTY\U233\Webb County TxDOT CERTIFD\dwg\SHEETS\1-GEN\ERALDWG FILE\General Notes and SMALL SIGNS.dwg

ESPEJO GATES ROADWAY SUMMARY — ALTERNATE 1

STREET NAME	LIMITS OF PROPOSED IMPROVEMENTS		WIDTH		LENGTH		AREA		260-6007 BASE MATERIAL LIME TRT (NEW BASE) 7"		260-6016 BASE MATERIAL LIME (HYD, COM,OR QK SLURRY) 4% BYWT		247-6041 BASE MATERIAL FL BS (CMP IN PLC) TYA GR 1-2 (FINAL POS) 12"	
	FROM	TO	(FT)		(FT)		(SY)		(SY)		(TON)		(CY)	
ESPEJO GATES	18+00 - 293+45.64		EST	FINAL	EST	FINAL	EST	FINAL	EST	FINAL	EST	FINAL	EST	FINAL
	18+00.00	19+88.29	28		188.29		585.79		585.79		7.69		195.26	
	21+11.71	23+03.02	28		191.31		595.19		595.19		7.81		198.40	
	24+27.27	66+88.92	28		4,261.65		13,258.47		13,258.47		174.02		4,419.49	
	67+66.25	73+40.16	28		573.91		1,785.50		1,785.50		23.43		595.17	
	74+22.49	116+46.93	28		4224.44		13,142.70		13,142.70		172.50		4,380.90	
	117+05.51	160+20.84	28		4315.33		13,425.47		13,425.47		176.21		4,475.16	
	160+79.16	229+15.77	28		6836.61		21,269.45		21,269.45		279.16		7,089.82	
	229+91.53	291+89.65	28		6198.12		19,283.04		19,283.04		253.09		6,427.68	
	PROJECT TOTAL				27,296.20		85,272.55		84,181.95		1,103.32		27,781.87	

ESPEJO GATES ROADWAY SUMMARY — ALTERNATE 2

STREET NAME	LIMITS OF PROPOSED IMPROVEMENTS		WIDTH		LENGTH		AREA		260-6054 BASE MATERIAL LIME TRT (NEW BASE) 10"		260-6016 BASE MATERIAL LIME (HYD, COM,OR QK SLURRY) 4% BYWT		247-6041 BASE MATERIAL FL BS (CMP IN PLC) TYA GR 1-2 (FINAL POS) 12.5"		340-6245 OVERLAY D-GR HMA(SQ) TY-C OR D PG64-22 LVL-UP 2"= 228# PER SY	
	FROM	TO	(FT)		(FT)		(SY)		(SY)		(TON)		(CY)		(TON)	
ESPEJO GATES	18+00 - 293+45.64		EST	FINAL	EST	FINAL	EST	FINAL	EST	FINAL	EST	FINAL	EST	FINAL	EST	FINAL
	18+00.00	19+88.29	28		188.29		585.79		585.79		10.98		203.40		100.17	
	21+11.71	23+03.02	28		191.31		595.19		595.19		11.16		206.66		101.78	
	24+27.27	66+88.92	28		4,261.65		13,258.47		13,258.47		248.60		4,603.63		2267.20	
	67+66.25	73+40.16	28		573.91		1,785.50		1,785.50		33.48		619.96		305.32	
	74+22.49	116+46.93	28		4224.44		13,142.70		13,142.70		246.43		4,563.44		2247.40	
	117+05.51	160+20.84	28		4315.33		13,425.47		13,425.47		251.73		4,661.62		2295.76	
	160+79.16	229+15.77	28		6836.61		21,269.45		21,269.45		398.80		7,385.23		3637.08	
	229+91.53	291+89.65	28		6198.12		19,283.04		19,283.04		361.56		6,695.50		3297.40	
	PROJECT TOTAL				27,296.20		85,272.55		84,181.95		1,572.14		28,939.45		14,252.12	

REVISION NO.	DATE	DESCRIPTION
1	---	---
2	---	---

PLOTTED 6-6-2016

STATUS FINAL

DRAWN BY F.R. | CHECKED BY J.A.M.

S&B INFRASTRUCTURE, LTD.
2120 BLAINE ST. LAREDO, TEXAS 78043
TELEPHONE: (956) 568-2561 FAX: (956) 994-0427
ENGINEERING # F-1582 SURVEYING # 10193914

ESPEJO GATES IMPROVEMENTS
WEBB COUNTY, TEXAS

SUMMARY TABLES OF ESTIMATED QUANTITIES

REFERENCE FILE NAME -

DRAWING FILE NAME General Notes and SMALL SIGNS

L:\PROJECTS\WEBB COUNTY\023389\Webb County T-ROOT CENTER\Dwg\SHEETS\1-GENERAL\DWG FILE\General Notes and SMALL SIGNS.dwg

ESPEJO GATES DRIVEWAY SUMMARY

STREET NAME	STA		#	PROP. SQ FT (FT) EST	PROP. SQ FT (FT) FINAL	530-2011 DRIVEWAYS (ACP) (SY) EST	530-2011 DRIVEWAYS (ACP) (SY) FINAL	530-2010 DRIVEWAYS (CONC) (SY) EST	530-2010 DRIVEWAYS (CONC) (SY) FINAL
ESPEJO GATES	36+00.00	(RT)	1	4428				492.0	
	36+00.00	(LT)	2	3407				380.0	
	133+85.76	(LT)	3	1016		113.0			
	134+20.25	(RT)	4	306		34.0			
	221+58.17	(RT)	5	3757				417.0	
	221+94.73	(LT)	6	5796				391.0	
	222+77.20	(RT)	7	352		39.0			
	222+99.55	(LT)	8	520		58.0			
	276+00.00	(LT)	9	205		23.0			
	276+54.92	(RT)	10	210		23.0			
PROJECT TOTALS						**290.00**		**1,680.00**	

ESPEJO GATES EARTH WORK SUMMARY

LOCATION BEGIN STA	LOCATION END STA	110-6001 EXCAVATION (ROADWAY) (CY) EST.	110-6001 EXCAVATION (ROADWAY) (CY) FINAL	132-6025 EMBANKMENT (FINAL) (DENS CONT) (TY C) (CY) EST.	132-6025 EMBANKMENT (FINAL) (DENS CONT) (TY C) (CY) FINAL
0+00.00	293+77	7,200.00		75,000.00	
PROJECT TOTALS		**7,200.00**		**75,000.00**	

ESPEJO GATES MARKINGS SUMMARY

BEGIN STA.	END STA.	LENGTH	666-6345 REF PAV MRK TY 1 (Y) (4") (SLD) (100 ML) (LF) EST	666-6345 (LF) FINAL	666-6342 REF PAV MRK TY 1 (W) (4") (SLD) (100 ML) (LF) EST	666-6342 (LF) FINAL	672-6006 REFL PAV MRKR TY II - A - A (EA) EST	672-6006 (EA) FINAL
ESPEJO GATES								
0+00.00	293+77.00	29377	55,000		55,000		734	
		0	0		0.00		0	
		0	0				0	
ESPEJO GATES TOTAL			**55000**		**55000**		**734**	

REVISION NO.	DATE	DESCRIPTION
1	---	---
2	---	---

PLOTTED 6-6-2016

STATUS FINAL

DRAWN BY F.R.

CHECKED BY J.A.M.

S&B INFRASTRUCTURE, LTD.
2120 BLAINE ST. LAREDO, TEXAS 78043
TELEPHONE: (956) 568-2561 FAX: (956) 994-0427
ENGINEERING # F-1582 SURVEYING # 10193914

ESPEJO GATES IMPROVEMENTS
WEBB COUNTY, TEXAS

SUMMARY TABLES OF ESTIMATED QUANTITIES

REFERENCE FILE NAME

DRAWING FILE NAME
General Notes and SMALL SIGNS

L:\PROJECTS\WEBB COUNTY\0238\Webb County TXDOT CERTIZ\dwg\SHEETS\1-GENERAL\DWG FILE\General Notes and SMALL SIGNS.dwg

SUMMARY OF SMALL SIGNS

PLAN SHEET NO.	SIGN NO.	SIGN NOMENCLATURE	SIGN TEXT	DIMENSIONS	ALUMINUM TYPE A	ALUMINUM TYPE G	POST TYPE	POSTS (1 OR 2)	ANCHOR TYPE	MOUNTING DESIGNATION	
ESPEJO GATES ROAD											
39	1	W1-2L	LEFT CURVE ARROW	24" X 24"	X		S80	1	SA	P	
40	3	W1-2R	RIGHT CURVE ARROW	24" X 24"	X		S80	1	SA	P	
41	4	W1-2R	RIGHT CURVE ARROW	24" X 24"	X		S80	1	SA	P	
---	5	W1-8	CHEVRON BK-BK	18" X 24"	X		S80	1	SA	P	
---	6		CHEVRON		X		S80	1	SA	P	
---	7	W1-2L	LEFT CURVE ARROW	24" X 24"	X		S80	1	SA	P	
---	8	W1-2L	LEFT CURVE ARROW	24" X 24"	X		S80	1	SA	P	
---	9	W1-2L	LEFT CURVE ARROW	24" X 24"	X		S80	1	SA	P	
---	10	W1-2R	RIGHT CURVE ARROW	24" X 24"	X		S80	1	SA	P	
42	11	W1-2R	RIGHT CURVE ARROW	24" X 24"	X		S80	1	SA	P	
---	12	W1-2L	LEFT CURVE ARROW	24" X 24"	X		S80	1	SA	P	
47	13	W1-2R	RIGHT CURVE ARROW	24" X 24"			S80		SA	P	
48	14	W1-2L	LEFT CURVE ARROW	24" X 24"			S80		SA	P	
56	15	W1-2R	RIGHT CURVE ARROW	24" X 24"	X		S80	1	SA	P	
---	16	W1-2L	LEFT CURVE ARROW	24" X 24"	X		S80	1	SA	P	
58	17	W1-2L	LEFT CURVE ARROW	24" X 24"	X		S80	1	SA	P	
---	18	W13-1	15 MPH	18" X 18"	X		S80	1	SA	P	
---	19	W1-8	CHEVRON BK-BK	18" X 24"	X		S80	1	SA	P	
---	20		CHEVRON		X		S80	1	SA	P	
---	21	W1-2R	RIGHT CURVE ARROW	24" X 24"	X		S80	1	SA	P	
---	22	W13-1	15 MPH	18" X 18"	X		S80	1	SA	P	
---	23	W5-2	RIGHT CURVE ARROW	36" X 36"	X		S80	1	SA	P	
---	24	W13-1	15 MPH	18" X 18"	X		S80	1	SA	P	
59	25	W1-8	CHEVRON BK-BK	18" X 24"	X		S80	1	SA	P	
---	26		CHEVRON					1			
---	27	W1-2L	LEFT CURVE ARROW	24" X 24"	X		S80	1	SA	P	
---	28	W13-1	15 MPH	18" X 18"	X		S80	1	SA	P	
---	29	W1-2L	LEFT CURVE ARROW	24" X 24"	X		S80	1	SA	P	
60	30	W1-2R	RIGHT CURVE ARROW	24" X 24"	X		S80	1	SA	P	
61	31	W1-2L	LEFT CURVE ARROW	24" X 24"	X		S80	1	SA	P	
---	32	W1-2R	RIGHT CURVE ARROW	24" X 24"	X		S80	1	SA	P	
64	33	R2-1	SPEED LIMIT 30	24" X 30"	X		S80	1	SA	P	
---	34	W3-1	STOP	30" X 30"	X		S80	1	SA	P	

S&BI
S&B INFRASTRUCTURE, LTD.
2120 BLAINE ST. LAREDO, TEXAS 78043
TELEPHONE: (956) 568-2561 FAX: (956) 994-0427
ENGINEERING # F-1582 SURVEYING # 10193914

TOTAL VOLUME TABLE

STA:	FILL AREA (SQ. FT.)	CUT AREA (SQ. FT.)	FILL VOL. (CU. YD.)	CUT VOL (CU. YD.)	CUM. FILL VOL. (CU. YD.)	CUM. CUT VOL. (CU. YD.)	CUM. NET VOL. (CU. YD.)
18+00.00	88.60	0.00	0.00	0.00	0.00	0.00	0.00
18+50.00	113.81	0.00	187.41	0.00	187.41	0.00	187.41
19+00.00	158.59	0.00	252.22	0.00	439.63	0.00	439.63
19+50.00	165.64	0.00	300.22	0.00	739.85	0.00	739.85
20+00.00	138.59	0.00	280.89	0.00	1020.74	0.00	1020.74
20+50.00	223.65	0.00	334.71	0.00	1355.45	0.00	1355.45
21+00.00	173.58	0.00	367.50	0.00	1722.95	0.00	1722.95
21+50.00	229.01	0.00	371.88	0.00	2094.83	0.00	2094.83
22+00.00	242.83	0.00	435.63	0.00	2530.47	0.00	2530.47
22+50.00	266.63	0.00	470.86	0.00	3001.33	0.00	3001.33
23+00.00	253.49	0.00	481.60	0.00	3482.93	0.00	3482.93
23+50.00	234.58	0.00	449.94	0.00	3932.87	0.00	3932.87
24+00.00	222.34	0.00	417.99	0.00	4350.86	0.00	4350.86
24+50.00	249.49	0.00	436.88	0.00	4787.74	0.00	4787.74
25+00.00	229.53	0.00	443.30	0.00	5231.04	0.00	5231.04
25+50.00	206.48	0.03	404.20	0.03	5635.24	0.03	5635.21
26+00.00	200.50	0.10	376.83	0.12	6012.07	0.15	6011.92
26+50.00	187.01	0.21	361.24	0.27	6373.32	0.43	6372.89
27+00.00	179.68	0.07	341.72	0.25	6715.04	0.67	6714.36
27+50.00	168.72	0.41	324.25	0.42	7039.29	1.09	7038.20
28+00.00	151.21	1.12	296.23	1.41	7335.52	2.50	7333.02
28+50.00	131.06	0.01	261.36	1.04	7596.88	3.53	7593.34
29+00.00	125.54	0.01	238.00	0.01	7834.87	3.54	7831.33
29+50.00	108.03	0.16	216.27	0.15	8051.14	3.70	8047.45
30+00.00	102.55	0.88	194.99	0.96	8246.13	4.66	8241.47
30+50.00	79.37	0.36	168.72	1.21	8414.85	5.87	8408.97
31+00.00	61.65	0.00	130.74	0.34	8545.59	6.22	8539.37
31+50.00	52.69	0.00	105.88	0.00	8651.47	6.22	8645.25
32+00.00	46.76	0.00	92.08	0.00	8743.55	6.22	8737.33
32+50.00	40.21	1.71	80.52	1.58	8824.07	7.80	8816.27
33+00.00	48.13	0.57	83.37	1.97	8907.44	9.78	8897.67
33+50.00	66.00	0.36	107.78	0.79	9015.22	10.57	9004.65
34+00.00	66.54	0.00	125.20	0.31	9140.42	10.88	9129.54
34+50.00	61.80	0.00	121.22	0.00	9261.63	10.88	9250.75
35+00.00	63.33	0.01	116.43	0.01	9378.06	10.88	9367.18
35+50.00	76.66	0.00	129.63	0.01	9507.69	10.89	9496.80
36+00.00	30.29	0.04	99.03	0.04	9606.72	10.92	9595.79
36+50.00	34.05	0.00	59.57	0.04	9666.29	10.96	9655.33
37+00.00	39.20	0.00	67.83	0.00	9734.12	10.96	9723.16
37+50.00	42.56	0.00	75.70	0.00	9809.82	10.96	9798.86

TOTAL VOLUME TABLE

STA:	FILL AREA (SQ. FT.)	CUT AREA (SQ. FT.)	FILL VOL. (CU. YD.)	CUT VOL (CU. YD.)	CUM. FILL VOL. (CU. YD.)	CUM. CUT VOL. (CU. YD.)	CUM. NET VOL. (CU. YD.)
38+00.00	63.11	0.03	97.84	0.03	9907.66	10.99	9896.67
38+50.00	66.89	0.00	120.37	0.03	10028.03	11.02	10017.01
39+00.00	63.91	1.13	121.11	1.05	10149.15	12.07	10137.08
39+50.00	66.49	1.34	124.59	2.07	10273.73	14.14	10259.59
40+00.00	62.73	0.56	121.43	1.69	10395.16	15.83	10379.33
40+50.00	45.65	0.05	100.35	0.56	10495.51	16.39	10479.12
41+00.00	44.58	1.28	83.55	1.23	10579.06	17.62	10561.44
41+50.00	48.95	0.00	86.61	1.18	10665.67	18.80	10646.87
42+00.00	54.15	0.00	95.47	0.00	10761.14	18.80	10742.33
42+50.00	69.60	0.21	114.59	0.20	10875.72	19.00	10856.72
43+00.00	76.84	0.27	135.60	0.45	11011.32	19.45	10991.87
43+50.00	77.92	0.06	143.30	0.31	11154.62	19.76	11134.86
44+00.00	80.62	0.02	147.11	0.07	11301.73	19.83	11281.90
44+50.00	77.22	0.00	146.50	0.02	11448.23	19.85	11428.38
45+00.00	85.99	0.00	151.44	0.00	11599.67	19.85	11579.82
45+50.00	97.61	0.00	170.01	0.00	11769.68	19.85	11749.83
46+00.00	103.34	0.00	186.06	0.00	11955.74	19.85	11935.89
46+50.00	112.28	0.00	199.65	0.00	12155.39	19.85	12135.54
47+00.00	115.44	0.00	210.86	0.00	12366.25	19.85	12346.40
47+50.00	112.54	0.00	211.24	0.00	12577.49	19.85	12557.63
48+00.00	103.99	0.01	200.62	0.01	12778.11	19.86	12758.25
48+50.00	95.38	0.03	184.70	0.03	12962.81	19.89	12942.91
49+00.00	96.08	0.06	177.28	0.08	13140.08	19.97	13120.11
49+50.00	97.36	0.13	179.11	0.17	13319.20	20.15	13299.05
50+00.00	91.46	0.12	174.83	0.23	13494.03	20.38	13473.65
50+50.00	91.25	0.04	169.17	0.15	13663.20	20.53	13642.67
51+00.00	100.76	0.03	177.79	0.07	13840.99	20.60	13820.39
51+50.00	121.17	0.07	205.49	0.10	14046.47	20.69	14025.78
52+00.00	134.34	0.03	236.58	0.09	14283.06	20.79	14262.27
52+50.00	145.42	0.00	259.04	0.03	14542.10	20.81	14521.28
53+00.00	139.66	0.00	263.96	0.00	14806.06	20.81	14785.24
53+50.00	127.42	0.00	247.29	0.00	15053.35	20.81	15032.53
54+00.00	114.78	0.00	224.25	0.00	15277.60	20.82	15256.78
54+50.00	100.88	0.04	199.68	0.04	15477.27	20.86	15456.42
55+00.00	103.43	0.06	189.17	0.09	15666.44	20.94	15645.50
55+50.00	126.54	0.08	212.93	0.12	15879.37	21.07	15858.31
56+00.00	151.81	0.01	257.73	0.09	16137.10	21.15	16115.95
56+50.00	182.44	0.01	309.49	0.02	16446.59	21.17	16425.42
57+00.00	182.05	0.01	337.49	0.01	16784.08	21.18	16762.89
57+50.00	158.17	0.05	315.01	0.05	17099.09	21.23	17077.85

REVISION		
NO.	DATE	DESCRIPTION
1	---	---
2	---	---

PLOTTED 6-6-2016

STATUS FINAL

DRAWN BY F.R. | CHECKED BY J.A.M.

S&B INFRASTRUCTURE, LTD.
2120 BLAINE ST. LAREDO, TEXAS 78043
TELEPHONE: (956) 568-2561 FAX: (956) 994-0427
ENGINEERING # F-1582 SURVEYING # 10193914

ESPEJO GATES IMPROVEMENTS
WEBB COUNTY, TEXAS

EARTHWORK TABULATION SHEETS SUMMARY

REFERENCE FILE NAME

DRAWING FILE NAME
Cut and Fill- EARTH WORK

L:\PROJECTS\WEBB COUNTY\0233\Webb County T-500T CERTIEZ\dwg\SHEETS\1.GENERAL\DWG FILE\Cut and Fill- EARTH WORK.dwg

TOTAL VOLUME TABLE

STA:	FILL AREA (SQ. FT.)	CUT AREA (SQ. FT.)	FILL VOL. (CU. YD.)	CUT VOL (CU. YD.)	CUM. FILL VOL. (CU. YD.)	CUM. CUT VOL. (CU. YD.)	CUM. NET VOL. (CU. YD.)
58+00.00	141.07	0.01	277.07	0.05	17376.16	21.29	17354.87
58+50.00	118.72	0.05	240.54	0.05	17616.70	21.34	17595.36
59+00.00	114.32	0.07	215.78	0.11	17832.48	21.45	17811.03
59+50.00	115.08	0.16	212.41	0.21	18044.89	21.66	18023.23
60+00.00	115.43	0.17	213.43	0.30	18258.32	21.96	18236.36
60+50.00	116.94	0.12	215.16	0.27	18473.48	22.23	18451.25
61+00.00	110.76	0.04	210.83	0.15	18684.30	22.38	18661.93
61+50.00	101.01	0.00	196.08	0.03	18880.38	22.41	18857.97
62+00.00	91.39	0.00	178.15	0.00	19058.54	22.41	19036.13
62+50.00	82.84	0.02	161.32	0.02	19219.86	22.43	19197.43
63+00.00	81.19	0.00	151.87	0.02	19371.73	22.45	19349.28
63+50.00	81.41	0.23	150.56	0.22	19522.29	22.67	19499.62
64+00.00	82.59	0.47	151.86	0.66	19674.15	23.32	19650.82
64+50.00	83.32	0.46	153.62	0.87	19827.77	24.19	19803.58
65+00.00	86.80	0.05	157.52	0.47	19985.29	24.66	19960.62
65+50.00	79.78	0.00	154.24	0.05	20139.52	24.71	20114.82
66+00.00	70.80	0.15	139.42	0.14	20278.95	24.85	20254.10
66+50.00	58.69	1.27	119.89	1.32	20398.84	26.16	20372.68
67+00.00	69.46	0.49	118.66	1.63	20517.50	27.79	20489.71
67+50.00	55.76	0.00	115.94	0.45	20633.44	28.25	20605.19
68+00.00	49.41	0.00	97.38	0.00	20730.82	28.25	20702.57
68+50.00	59.81	0.00	101.13	0.00	20831.95	28.25	20803.70
69+00.00	70.19	0.00	120.38	0.00	20952.33	28.25	20924.08
69+50.00	81.00	0.00	140.00	0.00	21092.32	28.25	21064.08
70+00.00	87.49	0.00	156.02	0.00	21248.34	28.25	21220.09
70+50.00	90.10	0.00	164.44	0.00	21412.77	28.25	21384.53
71+00.00	95.03	0.54	171.42	0.50	21584.19	28.74	21555.45
71+50.00	89.33	0.66	170.71	1.11	21754.90	29.85	21725.04
72+00.00	83.12	0.92	159.68	1.47	21914.57	31.32	21883.25
72+50.00	93.26	0.28	163.32	1.11	22077.89	32.43	22045.46
73+00.00	99.37	0.12	178.36	0.37	22256.25	32.80	22223.45
73+50.00	103.86	0.00	188.17	0.12	22444.42	32.92	22411.50
74+00.00	88.72	0.00	178.31	0.00	22622.72	32.92	22589.81
74+50.00	46.54	1.33	125.24	1.23	22747.96	34.15	22713.81
75+00.00	43.32	0.32	83.21	1.52	22831.17	35.67	22795.49
75+50.00	42.27	1.11	79.25	1.32	22910.42	37.00	22873.42
76+00.00	49.47	1.39	84.95	2.31	22995.36	39.31	22956.05
76+50.00	45.02	1.85	87.49	3.00	23082.86	42.31	23040.55
77+00.00	47.26	1.23	85.44	2.85	23168.30	45.15	23123.15
77+50.00	50.05	0.13	90.10	1.26	23258.40	46.42	23211.98

TOTAL VOLUME TABLE

STA:	FILL AREA (SQ. FT.)	CUT AREA (SQ. FT.)	FILL VOL. (CU. YD.)	CUT VOL (CU. YD.)	CUM. FILL VOL. (CU. YD.)	CUM. CUT VOL. (CU. YD.)	CUM. NET VOL. (CU. YD.)
78+00.00	51.42	0.00	93.95	0.12	23352.35	46.54	23305.80
78+50.00	54.34	0.12	97.92	0.11	23450.26	46.65	23403.61
79+00.00	57.32	0.09	103.39	0.20	23553.65	46.85	23506.80
79+50.00	62.39	0.01	110.84	0.10	23664.49	46.95	23617.55
80+00.00	66.05	0.00	118.92	0.01	23783.42	46.96	23736.46
80+50.00	73.51	0.00	129.23	0.00	23912.64	46.96	23865.68
81+00.00	83.09	0.00	145.01	0.00	24057.65	46.96	24010.69
81+50.00	96.03	0.00	165.86	0.00	24223.51	46.96	24176.55
82+00.00	100.75	0.00	182.20	0.00	24405.71	46.96	24358.75
82+50.00	103.32	0.00	188.95	0.00	24594.67	46.96	24547.70
83+00.00	102.81	0.00	190.86	0.00	24785.53	46.96	24738.57
83+50.00	101.41	0.00	189.10	0.00	24974.63	46.96	24927.66
84+00.00	99.94	0.00	186.43	0.00	25161.06	46.96	25114.10
84+50.00	98.08	0.00	183.35	0.00	25344.41	46.96	25297.45
85+00.00	96.78	0.00	180.43	0.00	25524.84	46.96	25477.87
85+50.00	94.81	0.01	177.40	0.02	25702.23	46.98	25655.25
86+00.00	88.09	0.03	169.35	0.04	25871.58	47.02	25824.57
86+50.00	83.71	0.03	159.07	0.05	26030.66	47.07	25983.59
87+00.00	84.15	0.02	155.43	0.05	26186.09	47.11	26138.98
87+50.00	79.17	0.02	151.22	0.04	26337.31	47.15	26290.16
88+00.00	69.59	0.01	137.74	0.03	26475.05	47.19	26427.86
88+50.00	64.22	0.00	123.89	0.02	26598.94	47.20	26551.74
89+00.00	66.11	0.00	120.68	0.00	26719.62	47.21	26672.42
89+50.00	72.82	0.00	128.65	0.00	26848.27	47.21	26801.06
90+00.00	77.56	0.00	139.25	0.00	26987.52	47.21	26940.31
90+50.00	78.41	0.00	144.42	0.00	27131.93	47.21	27084.73
91+00.00	82.81	0.00	149.28	0.00	27281.22	47.21	27234.01
91+50.00	93.39	0.00	163.15	0.00	27444.36	47.21	27397.16
92+00.00	101.62	0.00	180.56	0.00	27624.93	47.21	27577.72
92+50.00	106.48	0.00	192.68	0.00	27817.61	47.21	27770.40
93+00.00	110.05	0.00	200.49	0.00	28018.09	47.21	27970.88
93+50.00	120.63	0.00	213.60	0.00	28231.69	47.21	28184.48
94+00.00	123.82	0.00	226.34	0.00	28458.03	47.21	28410.82
94+50.00	120.38	0.00	226.11	0.00	28684.14	47.22	28636.92
95+00.00	120.84	0.00	223.35	0.00	28907.48	47.22	28860.27
95+50.00	121.36	0.00	224.25	0.00	29131.74	47.22	29084.52
96+00.00	116.75	0.00	220.46	0.00	29352.20	47.22	29304.99
96+50.00	110.14	0.01	210.08	0.01	29562.28	47.23	29515.05
97+00.00	107.11	0.00	201.15	0.01	29763.43	47.24	29716.20
97+50.00	104.64	0.00	196.07	0.00	29959.50	47.24	29912.26

REVISION		
NO.	DATE	DESCRIPTION
1	---	---
2	---	---

PLOTTED 6-6-2016

STATUS FINAL

DRAWN BY F.R. | CHECKED BY J.A.M.

S&B INFRASTRUCTURE, LTD.
2120 BLAINE ST. LAREDO, TEXAS 78043
TELEPHONE: (956) 568-2561 FAX: (956) 994-0427
ENGINEERING # F-1582 SURVEYING # 10193914

ESPEJO GATES IMPROVEMENTS
WEBB COUNTY, TEXAS

EARTHWORK TABULATION SHEETS SUMMARY

REFERENCE FILE NAME
-
DRAWING FILE NAME
Cut and Fill- EARTH WORK

L:\PROJECTS\WEBB COUNTY\023\Webb County 7\2007 CERTIZ\dwg\SHEETS\1-GENERAL\DWG FILE\Cut and Fill- EARTH WORK.dwg

TOTAL VOLUME TABLE

STA:	FILL AREA (SQ. FT.)	CUT AREA (SQ. FT.)	FILL VOL. (CU. YD.)	CUT VOL (CU. YD.)	CUM. FILL VOL. (CU. YD.)	CUM. CUT VOL. (CU. YD.)	CUM. NET VOL. (CU. YD.)
98+00.00	96.11	0.00	185.89	0.00	30145.39	47.24	30098.15
98+50.00	93.36	0.00	175.44	0.00	30320.82	47.24	30273.59
99+00.00	88.35	0.00	168.25	0.00	30489.08	47.24	30441.84
99+50.00	80.45	0.00	156.30	0.00	30645.38	47.24	30598.14
100+00.00	71.98	0.00	141.14	0.00	30786.52	47.24	30739.28
100+50.00	77.87	0.00	138.76	0.00	30925.27	47.24	30878.04
101+00.00	89.27	0.00	154.77	0.00	31080.04	47.24	31032.81
101+50.00	95.86	0.00	171.43	0.00	31251.47	47.24	31204.23
102+00.00	94.09	0.00	175.88	0.00	31427.35	47.24	31380.12
102+50.00	97.37	0.00	177.28	0.00	31604.63	47.24	31557.40
103+00.00	97.69	0.00	180.61	0.00	31785.25	47.24	31738.01
103+50.00	93.14	0.00	176.69	0.00	31961.94	47.24	31914.70
104+00.00	85.85	0.00	165.72	0.00	32127.66	47.24	32080.43
104+50.00	76.67	0.00	150.48	0.00	32278.14	47.24	32230.90
105+00.00	66.61	0.00	132.66	0.00	32410.80	47.24	32363.57
105+50.00	67.02	0.00	123.73	0.00	32534.53	47.24	32487.30
106+00.00	78.04	0.00	134.32	0.00	32668.85	47.24	32621.62
106+50.00	112.03	0.56	175.99	0.51	32844.84	47.75	32797.09
107+00.00	139.54	0.06	234.54	0.54	33079.38	48.29	33031.09
107+50.00	155.29	0.00	274.12	0.06	33353.51	48.35	33305.16
108+00.00	137.57	0.00	271.16	0.00	33624.67	48.35	33576.32
108+50.00	119.62	0.00	238.14	0.00	33862.80	48.35	33814.45
109+00.00	90.11	0.00	194.19	0.00	34056.99	48.35	34008.65
109+50.00	77.65	0.00	155.33	0.00	34212.33	48.35	34163.98
110+00.00	72.72	0.00	139.23	0.00	34351.56	48.35	34303.21
110+50.00	78.44	0.00	139.96	0.00	34491.52	48.35	34443.17
111+00.00	63.08	0.00	131.04	0.00	34622.56	48.35	34574.21
111+50.00	52.85	0.00	107.34	0.00	34729.90	48.35	34681.55
112+00.00	51.47	0.00	96.59	0.00	34826.49	48.35	34778.15
112+50.00	56.47	0.00	99.94	0.00	34926.44	48.35	34878.09
113+00.00	57.52	0.00	105.55	0.00	35031.99	48.35	34983.64
113+50.00	58.27	0.00	107.22	0.00	35139.20	48.35	35090.86
114+00.00	57.34	0.00	107.05	0.00	35246.26	48.35	35197.91
114+50.00	54.63	0.00	103.68	0.00	35349.93	48.35	35301.58
115+00.00	47.12	0.02	94.21	0.02	35444.14	48.37	35395.77
115+50.00	36.23	0.34	77.18	0.34	35521.31	48.71	35472.61
116+00.00	33.40	0.03	64.48	0.34	35585.79	49.04	35536.75
116+50.00	42.30	0.01	70.10	0.03	35655.89	49.08	35606.81
117+00.00	34.37	2.45	70.99	2.28	35726.88	51.36	35675.52
117+50.00	33.58	1.47	62.92	3.64	35789.80	55.00	35734.80

TOTAL VOLUME TABLE

STA:	FILL AREA (SQ. FT.)	CUT AREA (SQ. FT.)	FILL VOL. (CU. YD.)	CUT VOL (CU. YD.)	CUM. FILL VOL. (CU. YD.)	CUM. CUT VOL. (CU. YD.)	CUM. NET VOL. (CU. YD.)
118+00.00	30.99	0.77	59.79	2.07	35849.59	57.07	35792.52
118+50.00	36.33	1.12	62.34	1.75	35911.93	58.82	35853.11
119+00.00	39.41	1.26	70.13	2.20	35982.06	61.03	35921.03
119+50.00	46.73	1.46	79.76	2.52	36061.81	63.55	35998.27
120+00.00	55.63	2.13	94.78	3.33	36156.59	66.87	36089.72
120+50.00	57.56	2.28	104.80	4.09	36261.40	70.96	36190.43
121+00.00	59.68	1.23	108.56	3.25	36369.95	74.22	36295.74
121+50.00	67.25	0.00	117.53	1.14	36487.48	75.35	36412.13
122+00.00	84.56	0.00	140.56	0.00	36628.04	75.35	36552.69
122+50.00	97.91	0.00	168.96	0.00	36797.00	75.35	36721.65
123+00.00	98.16	0.00	181.55	0.00	36978.55	75.35	36903.20
123+50.00	98.23	0.00	181.84	0.00	37160.39	75.35	37085.04
124+00.00	99.63	0.01	183.20	0.01	37343.59	75.37	37268.22
124+50.00	100.96	0.02	185.73	0.03	37529.32	75.40	37453.93
125+00.00	105.28	0.00	190.96	0.02	37720.29	75.41	37644.88
125+50.00	109.66	0.00	199.02	0.00	37919.31	75.41	37843.90
126+00.00	118.30	0.00	211.08	0.00	38130.39	75.41	38054.98
126+50.00	123.99	0.00	224.35	0.00	38354.74	75.41	38279.33
127+00.00	140.13	0.00	244.56	0.00	38599.30	75.41	38523.88
127+50.00	151.64	0.00	270.15	0.00	38869.45	75.42	38794.03
128+00.00	141.70	0.06	271.61	0.06	39141.06	75.48	39065.58
128+50.00	134.06	0.12	255.33	0.17	39396.39	75.64	39320.74
129+00.00	137.28	0.02	251.24	0.13	39647.63	75.77	39571.86
129+50.00	136.28	0.00	253.30	0.02	39900.92	75.79	39825.14
130+00.00	139.77	0.00	255.60	0.00	40156.52	75.79	40080.73
130+50.00	139.27	0.00	258.37	0.00	40414.88	75.79	40339.10
131+00.00	130.98	0.00	250.24	0.00	40665.12	75.79	40589.33
131+50.00	123.08	0.00	235.24	0.00	40900.36	75.79	40824.58
132+00.00	113.43	0.00	218.99	0.00	41119.36	75.79	41043.57
132+50.00	102.43	0.00	199.87	0.00	41319.23	75.79	41243.44
133+00.00	108.22	0.00	195.04	0.00	41514.27	75.79	41438.49
133+50.00	108.04	0.00	200.23	0.00	41714.51	75.79	41638.72
134+00.00	98.34	0.00	191.09	0.00	41905.60	75.79	41829.81
134+50.00	89.73	0.02	174.14	0.02	42079.74	75.80	42003.93
135+00.00	83.64	0.00	160.53	0.02	42240.26	75.83	42164.44
135+50.00	82.79	0.00	154.10	0.01	42394.36	75.83	42318.53
136+00.00	92.28	0.05	162.10	0.05	42556.46	75.88	42480.58
136+50.00	88.82	0.08	167.69	0.12	42724.15	76.00	42648.15
137+00.00	67.56	0.01	144.80	0.09	42868.95	76.09	42792.86
137+50.00	51.87	0.00	110.58	0.01	42979.53	76.10	42903.43

REVISION		
NO.	DATE	DESCRIPTION
1	---	---
2	---	---

PLOTTED 6-6-2016

STATUS FINAL

DRAWN BY F.R. | CHECKED BY J.A.M.

S&B INFRASTRUCTURE, LTD.
2120 BLAINE ST. LAREDO, TEXAS 78043
TELEPHONE: (956) 568-2561 FAX: (956) 994-0427
ENGINEERING # F-1582 SURVEYING # 10193914

ESPEJO GATES IMPROVEMENTS
WEBB COUNTY, TEXAS

EARTHWORK TABULATION SHEETS SUMMARY

REFERENCE FILE NAME

DRAWING FILE NAME
Cut and Fill- EARTH WORK

L:\PROJECTS\WEBB COUNTY\0233\Webb County 7\DOT CERTIZ\dwg\SHEETS\1-GENERAL\DWG FILE\Cut and Fill- EARTH WORK.dwg

TOTAL VOLUME TABLE

STA:	FILL AREA (SQ. FT.)	CUT AREA (SQ. FT.)	FILL VOL. (CU. YD.)	CUT VOL (CU. YD.)	CUM. FILL VOL. (CU. YD.)	CUM. CUT VOL. (CU. YD.)	CUM. NET VOL. (CU. YD.)
138+00.00	52.48	0.01	96.63	0.01	43076.16	76.11	43000.05
138+50.00	44.77	0.07	90.05	0.07	43166.21	76.18	43090.03
139+00.00	50.35	0.37	88.07	0.40	43254.28	76.58	43177.70
139+50.00	55.05	1.57	97.59	1.80	43351.87	78.38	43273.49
140+00.00	55.67	1.36	102.52	2.71	43454.39	81.09	43373.30
140+50.00	58.78	0.95	105.98	2.14	43560.36	83.23	43477.14
141+00.00	62.06	0.82	111.89	1.64	43672.25	84.87	43587.38
141+50.00	66.01	0.03	118.58	0.79	43790.83	85.66	43705.16
142+00.00	74.63	0.00	130.22	0.03	43921.04	85.69	43835.35
142+50.00	80.28	0.00	143.43	0.00	44064.47	85.69	43978.78
143+00.00	79.16	0.00	147.63	0.00	44212.10	85.69	44126.41
143+50.00	79.51	0.13	146.92	0.12	44359.03	85.81	44273.22
144+00.00	94.02	0.00	160.68	0.12	44519.70	85.93	44433.78
144+50.00	99.42	0.00	179.11	0.00	44698.82	85.93	44612.89
145+00.00	86.19	0.00	171.87	0.00	44870.68	85.93	44784.76
145+50.00	84.06	0.00	157.64	0.00	45028.32	85.93	44942.39
146+00.00	86.01	0.00	157.47	0.00	45185.79	85.93	45099.86
146+50.00	83.47	0.00	156.92	0.00	45342.71	85.93	45256.79
147+00.00	73.95	0.00	145.75	0.00	45488.47	85.93	45402.54
147+50.00	64.17	0.00	127.89	0.00	45616.35	85.93	45530.43
148+00.00	49.17	0.00	104.95	0.00	45721.30	85.93	45635.38
148+50.00	38.64	0.12	81.31	0.11	45802.61	86.04	45716.57
149+00.00	36.70	1.73	69.76	1.71	45872.37	87.75	45784.62
149+50.00	34.73	1.48	66.14	2.97	45938.51	90.72	45847.79
150+00.00	26.42	0.73	56.62	2.05	45995.12	92.77	45902.36
150+50.00	24.64	1.42	47.28	1.99	46042.40	94.76	45947.64
151+00.00	23.23	1.68	44.33	2.87	46086.73	97.63	45989.10
151+50.00	26.66	1.89	46.20	3.31	46132.93	100.94	46031.99
152+00.00	33.26	2.39	55.48	3.96	46188.41	104.90	46083.51
152+50.00	39.13	0.76	67.03	2.91	46255.44	107.81	46147.63
153+00.00	38.78	0.55	72.14	1.21	46327.59	109.03	46218.56
153+50.00	38.03	0.00	71.12	0.51	46398.70	109.54	46289.17
154+00.00	43.12	0.00	75.14	0.00	46473.84	109.54	46364.31
154+50.00	45.34	0.00	81.91	0.00	46555.76	109.54	46446.22
155+00.00	46.33	0.00	84.88	0.00	46640.64	109.54	46531.10
155+50.00	45.37	0.00	84.91	0.00	46725.55	109.54	46616.01
156+00.00	48.25	0.00	86.69	0.00	46812.23	109.54	46702.70
156+50.00	49.43	0.00	90.44	0.00	46902.67	109.54	46793.14
157+00.00	48.26	0.00	90.45	0.00	46993.13	109.54	46883.59
157+50.00	48.57	0.00	89.65	0.00	47082.78	109.54	46973.24

TOTAL VOLUME TABLE

STA:	FILL AREA (SQ. FT.)	CUT AREA (SQ. FT.)	FILL VOL. (CU. YD.)	CUT VOL (CU. YD.)	CUM. FILL VOL. (CU. YD.)	CUM. CUT VOL. (CU. YD.)	CUM. NET VOL. (CU. YD.)
158+00.00	55.36	0.00	96.23	0.00	47179.01	109.54	47069.47
158+50.00	55.80	0.00	102.93	0.00	47281.94	109.54	47172.40
159+00.00	56.31	0.00	103.80	0.00	47385.74	109.54	47276.20
159+50.00	58.89	0.00	106.66	0.00	47492.41	109.54	47382.87
160+00.00	78.33	0.00	127.05	0.00	47619.46	109.54	47509.92
160+50.00	78.09	0.07	144.83	0.07	47764.29	109.61	47654.69
161+00.00	74.73	1.13	141.50	1.12	47905.80	110.72	47795.07
161+50.00	57.87	0.88	122.78	1.87	48028.58	112.59	47915.99
162+00.00	56.30	1.85	105.71	2.53	48134.29	115.12	48019.17
162+50.00	65.85	0.67	113.10	2.34	48247.39	117.46	48129.93
163+00.00	62.84	0.50	119.16	1.09	48366.56	118.55	48248.01
163+50.00	63.58	0.00	117.06	0.47	48483.62	119.02	48364.60
164+00.00	72.93	0.00	126.39	0.00	48610.01	119.02	48490.99
164+50.00	81.19	0.00	142.70	0.00	48752.71	119.02	48633.69
165+00.00	88.60	0.00	157.21	0.00	48909.92	119.02	48790.91
165+50.00	87.77	0.00	163.31	0.00	49073.23	119.02	48954.21
166+00.00	90.19	0.00	164.78	0.00	49238.00	119.02	49118.99
166+50.00	88.79	0.00	165.72	0.00	49403.73	119.02	49284.71
167+00.00	91.95	0.00	167.35	0.00	49571.07	119.02	49452.06
167+50.00	91.77	0.00	170.11	0.00	49741.18	119.02	49622.17
168+00.00	101.25	0.00	178.73	0.00	49919.91	119.02	49800.90
168+50.00	107.45	0.00	193.25	0.00	50113.16	119.02	49994.14
169+00.00	113.25	0.00	204.36	0.00	50317.52	119.02	50198.50
169+50.00	120.96	0.00	216.86	0.00	50534.38	119.02	50415.36
170+00.00	121.05	0.07	224.09	0.06	50758.47	119.08	50639.39
170+50.00	123.74	0.12	226.66	0.17	50985.12	119.25	50865.87
171+00.00	123.16	0.02	228.61	0.13	51213.73	119.39	51094.35
171+50.00	124.45	0.00	229.27	0.02	51443.01	119.41	51323.60
172+00.00	121.57	0.00	227.80	0.00	51670.80	119.41	51551.40
172+50.00	117.15	0.00	221.04	0.00	51891.85	119.41	51772.44
173+00.00	121.76	0.00	221.22	0.00	52113.06	119.41	51993.66
173+50.00	123.57	0.00	227.16	0.00	52340.22	119.41	52220.81
174+00.00	128.07	0.00	233.00	0.00	52573.22	119.41	52453.81
174+50.00	126.68	0.00	235.88	0.00	52809.10	119.41	52689.69
175+00.00	129.42	0.00	237.13	0.00	53046.23	119.41	52926.82
175+50.00	127.91	0.00	238.27	0.00	53284.50	119.41	53165.09
176+00.00	126.02	0.00	235.12	0.00	53519.61	119.41	53400.20
176+50.00	116.89	0.00	224.91	0.00	53744.52	119.41	53625.11
177+00.00	107.98	0.07	208.21	0.07	53952.73	119.48	53833.26
177+50.00	106.47	0.11	198.57	0.16	54151.30	119.64	54031.66

NO.	DATE	DESCRIPTION
1	---	---
2	---	---

REVISION

PLOTTED 6-6-2016

STATUS FINAL

DRAWN BY F.R.

CHECKED BY J.A.M.

S&B INFRASTRUCTURE, LTD.
2120 BLAINE ST. LAREDO, TEXAS 78043
TELEPHONE: (956) 568-2561 FAX: (956) 994-0427
ENGINEERING # F-1582 SURVEYING # 10193914

ESPEJO GATES IMPROVEMENTS
WEBB COUNTY, TEXAS

EARTHWORK
TABULATION
SHEETS SUMMARY

REFERENCE FILE NAME

DRAWING FILE NAME
Cut and Fill- EARTH WORK

L:\PROJECTS\WEBB COUNTY\0233\Webb County 7\DOT CERTIZ\dwg\SHEETS\1-GENERAL\DWG FILE\Cut and Fill- EARTH WORK.dwg

TOTAL VOLUME TABLE

STA:	FILL AREA (SQ. FT.)	CUT AREA (SQ. FT.)	FILL VOL. (CU. YD.)	CUT VOL (CU. YD.)	CUM. FILL VOL. (CU. YD.)	CUM. CUT VOL. (CU. YD.)	CUM. NET VOL. (CU. YD.)
178+00.00	111.67	0.02	201.99	0.12	54353.29	119.76	54233.53
178+50.00	109.79	0.00	205.06	0.02	54558.35	119.78	54438.58
179+00.00	108.14	0.00	201.79	0.00	54760.14	119.78	54640.37
179+50.00	103.55	0.00	196.01	0.00	54956.15	119.78	54836.38
180+00.00	112.65	0.00	200.19	0.00	55156.34	119.78	55036.56
180+50.00	120.25	0.00	215.65	0.00	55371.99	119.78	55252.21
181+00.00	124.82	0.00	226.91	0.00	55598.90	119.78	55479.12
181+50.00	126.75	0.00	232.93	0.00	55831.84	119.78	55712.06
182+00.00	129.39	0.00	237.17	0.00	56069.01	119.78	55949.23
182+50.00	131.36	0.00	241.44	0.00	56310.45	119.78	56190.67
183+00.00	133.11	0.00	244.88	0.00	56555.33	119.78	56435.56
183+50.00	134.01	0.00	247.33	0.00	56802.67	119.78	56682.89
184+00.00	137.53	0.00	251.43	0.00	57054.09	119.78	56934.32
184+50.00	137.34	0.00	254.51	0.00	57308.60	119.78	57188.83
185+00.00	141.33	0.00	258.03	0.00	57566.63	119.78	57446.85
185+50.00	137.87	0.00	258.52	0.00	57825.15	119.78	57705.37
186+00.00	140.75	0.00	257.98	0.00	58083.13	119.78	57963.35
186+50.00	148.28	0.00	267.61	0.00	58350.74	119.78	58230.96
187+00.00	152.99	0.00	278.95	0.00	58629.70	119.78	58509.92
187+50.00	158.29	0.00	288.22	0.00	58917.92	119.78	58798.14
188+00.00	160.23	0.00	294.92	0.00	59212.84	119.79	59093.05
188+50.00	161.86	0.00	298.23	0.00	59511.07	119.79	59391.28
189+00.00	162.03	0.00	299.90	0.00	59810.97	119.79	59691.18
189+50.00	158.56	0.00	296.84	0.00	60107.81	119.79	59988.02
190+00.00	166.51	0.00	300.98	0.00	60408.80	119.79	60289.01
190+50.00	174.73	0.00	315.96	0.00	60724.76	119.79	60604.97
191+00.00	181.79	0.00	330.11	0.00	61054.87	119.79	60935.08
191+50.00	189.79	0.00	344.06	0.00	61398.93	119.79	61279.14
192+00.00	198.83	0.00	359.84	0.00	61758.77	119.79	61638.98
192+50.00	202.09	0.00	371.22	0.00	62129.99	119.79	62010.20
193+00.00	192.82	0.00	365.66	0.00	62495.65	119.79	62375.86
193+50.00	189.57	0.00	354.07	0.00	62849.72	119.79	62729.93
194+00.00	191.79	0.00	353.11	0.00	63202.83	119.79	63083.04
194+50.00	194.11	0.00	357.32	0.00	63560.15	119.79	63440.36
195+00.00	193.24	0.00	358.66	0.00	63918.81	119.79	63799.02
195+50.00	193.67	0.00	358.25	0.00	64277.06	119.79	64157.27
196+00.00	200.99	0.00	365.43	0.00	64642.48	119.79	64522.69
196+50.00	202.01	0.00	373.15	0.01	65015.63	119.80	64895.84
197+00.00	200.02	0.00	372.25	0.00	65387.88	119.80	65268.08
197+50.00	197.73	0.00	368.29	0.00	65756.17	119.80	65636.37

TOTAL VOLUME TABLE

STA:	FILL AREA (SQ. FT.)	CUT AREA (SQ. FT.)	FILL VOL. (CU. YD.)	CUT VOL (CU. YD.)	CUM. FILL VOL. (CU. YD.)	CUM. CUT VOL. (CU. YD.)	CUM. NET VOL. (CU. YD.)
198+00.00	188.16	0.00	357.31	0.00	66113.48	119.80	65993.68
198+50.00	178.88	0.01	339.85	0.01	66453.33	119.81	66333.53
199+00.00	170.79	0.02	323.77	0.03	66777.10	119.83	66657.27
199+50.00	164.03	0.02	310.02	0.04	67087.12	119.87	66967.25
200+00.00	151.10	0.00	291.79	0.02	67378.91	119.89	67259.02
200+50.00	131.83	0.00	261.98	0.00	67640.89	119.89	67520.99
201+00.00	95.60	0.00	210.26	0.00	67851.15	119.89	67731.25
201+50.00	103.34	0.00	184.89	0.00	68036.04	119.89	67916.14
202+00.00	120.30	0.00	209.30	0.00	68245.33	119.89	68125.44
202+50.00	129.96	0.00	232.40	0.00	68477.74	119.89	68357.84
203+00.00	151.74	0.00	260.83	0.00	68738.57	119.89	68618.68
203+50.00	172.32	0.00	300.05	0.00	69038.62	119.89	68918.73
204+00.00	179.05	0.00	325.34	0.00	69363.97	119.89	69244.07
204+50.00	180.00	0.00	332.46	0.00	69696.42	119.89	69576.53
205+00.00	176.53	0.00	330.13	0.00	70026.55	119.89	69906.66
205+50.00	171.90	0.00	322.63	0.00	70349.18	119.90	70229.28
206+00.00	167.04	0.03	313.84	0.03	70663.02	119.93	70543.09
206+50.00	161.36	0.03	304.08	0.06	70967.10	119.99	70847.11
207+00.00	156.87	0.00	294.66	0.03	71261.76	120.02	71141.74
207+50.00	149.28	0.00	283.47	0.00	71545.23	120.02	71425.21
208+00.00	139.60	0.00	267.48	0.00	71812.71	120.02	71692.69
208+50.00	136.37	0.00	255.52	0.00	72068.23	120.03	71948.20
209+00.00	135.71	0.02	251.92	0.03	72320.15	120.05	72200.10
209+50.00	130.27	0.03	246.28	0.05	72566.43	120.10	72446.33
210+00.00	121.91	0.00	233.50	0.03	72799.92	120.13	72679.80
210+50.00	116.66	0.00	220.89	0.00	73020.81	120.13	72900.69
211+00.00	114.89	0.00	214.39	0.00	73235.21	120.13	73115.08
211+50.00	113.07	0.01	211.08	0.00	73446.28	120.13	73326.15
212+00.00	112.57	0.06	208.92	0.06	73655.21	120.19	73535.01
212+50.00	113.40	0.10	209.23	0.15	73864.43	120.35	73744.09
213+00.00	117.33	0.02	213.64	0.11	74078.07	120.46	73957.62
213+50.00	120.13	0.00	219.87	0.02	74297.94	120.47	74177.47
214+00.00	121.53	0.01	223.75	0.01	74521.69	120.48	74401.21
214+50.00	122.93	0.03	226.35	0.04	74748.04	120.52	74627.52
215+00.00	127.35	0.13	231.74	0.15	74979.79	120.68	74859.11
215+50.00	129.63	0.08	237.95	0.20	75217.73	120.87	75096.86
216+00.00	134.32	0.02	244.40	0.10	75462.13	120.97	75341.15
216+50.00	129.77	0.01	244.53	0.03	75706.66	121.01	75585.65
217+00.00	100.90	0.11	213.59	0.12	75920.25	121.12	75799.13
217+50.00	68.41	0.30	156.77	0.38	76077.01	121.51	75955.51

REVISION		
NO.	DATE	DESCRIPTION
1	---	---
2	---	---

PLOTTED 6-6-2016

STATUS FINAL

DRAWN BY F.R. | CHECKED BY J.A.M.

S&B INFRASTRUCTURE, LTD.
2120 BLAINE ST. LAREDO, TEXAS 78043
TELEPHONE: (956) 568-2561 FAX: (956) 994-0427
ENGINEERING # F-1582 SURVEYING # 10193914

ESPEJO GATES IMPROVEMENTS
WEBB COUNTY, TEXAS

EARTHWORK TABULATION SHEETS SUMMARY

REFERENCE FILE NAME

DRAWING FILE NAME
Cut and Fill- EARTH WORK

L:\PROJECTS\WEBB COUNTY\0233\Webb County T-ROOT CERTIZ\dwg\SHEETS\1-GENERAL\DWG FILE\Cut and Fill- EARTH WORK.dwg

TOTAL VOLUME TABLE

STA:	FILL AREA (SQ. FT.)	CUT AREA (SQ. FT.)	FILL VOL. (CU. YD.)	CUT VOL (CU. YD.)	CUM. FILL VOL. (CU. YD.)	CUM. CUT VOL. (CU. YD.)	CUM. NET VOL. (CU. YD.)
218+00.00	85.88	0.00	142.85	0.28	76219.87	121.78	76098.08
218+50.00	104.83	0.00	176.58	0.00	76396.45	121.78	76274.67
219+00.00	114.76	0.00	203.33	0.00	76599.78	121.78	76478.00
219+50.00	124.07	0.00	221.14	0.00	76820.92	121.78	76699.13
220+00.00	129.33	0.00	234.63	0.00	77055.55	121.78	76933.76
220+50.00	145.05	0.00	254.05	0.00	77309.60	121.78	77187.82
221+00.00	147.78	0.00	271.14	0.00	77580.74	121.79	77458.96
221+50.00	137.36	0.00	264.44	0.00	77845.19	121.79	77723.40
222+00.00	151.77	0.00	268.04	0.00	78113.23	121.79	77991.44
222+50.00	134.30	0.00	264.88	0.00	78378.11	121.79	78256.32
223+00.00	110.03	0.10	226.23	0.10	78604.34	121.89	78482.45
223+50.00	94.84	0.03	190.22	0.14	78794.56	122.03	78672.54
224+00.00	109.80	0.00	191.49	0.03	78986.06	122.06	78864.00
224+50.00	87.23	2.16	186.36	1.77	79172.42	123.83	79048.59
225+00.00	86.60	0.00	164.05	1.77	79336.47	125.60	79210.87
225+50.00	86.23	0.00	160.27	0.00	79496.74	125.60	79371.14
226+00.00	73.06	0.00	147.49	0.00	79644.23	125.60	79518.63
226+50.00	63.74	0.04	126.66	0.03	79770.89	125.63	79645.26
227+00.00	54.19	0.08	109.20	0.11	79880.09	125.75	79754.34
227+50.00	44.92	0.25	91.77	0.31	79971.86	126.06	79845.80
228+00.00	36.12	0.62	75.04	0.80	80046.90	126.86	79920.04
228+50.00	13.19	10.01	45.66	9.84	80092.56	136.69	79955.87
229+00.00	11.11	18.23	22.50	26.14	80115.07	162.83	79952.23
229+50.00	17.29	51.26	26.29	64.34	80141.36	227.18	79914.18
230+00.00	2.02	66.14	17.88	108.70	80159.24	335.88	79823.36
230+50.00	0.17	39.24	2.10	97.56	80161.34	433.44	79727.90
231+00.00	7.25	11.31	7.04	46.68	80168.38	480.12	79688.27
231+50.00	17.85	4.07	23.82	14.04	80192.20	494.15	79698.05
232+00.00	22.44	3.25	38.31	6.51	80230.51	500.66	79729.85
232+50.00	40.36	0.00	59.36	2.86	80289.87	503.53	79786.35
233+00.00	41.85	0.51	77.42	0.44	80367.29	503.97	79863.32
233+50.00	40.41	0.13	77.41	0.55	80444.71	504.52	79940.18
234+00.00	57.81	0.00	91.74	0.11	80536.45	504.63	80031.82
234+50.00	50.13	0.00	100.00	0.00	80636.45	504.63	80131.82
235+00.00	43.34	0.69	86.55	0.64	80723.00	505.27	80217.73
235+50.00	53.58	1.47	89.74	2.00	80812.75	507.27	80305.48
236+00.00	64.86	1.38	109.67	2.63	80922.41	509.91	80412.51
236+50.00	72.39	0.23	127.08	1.48	81049.49	511.39	80538.11
237+00.00	84.93	1.65	145.67	1.74	81195.16	513.13	80682.03
237+50.00	92.06	2.50	163.88	3.85	81359.04	516.97	80842.07

TOTAL VOLUME TABLE

STA:	FILL AREA (SQ. FT.)	CUT AREA (SQ. FT.)	FILL VOL. (CU. YD.)	CUT VOL (CU. YD.)	CUM. FILL VOL. (CU. YD.)	CUM. CUT VOL. (CU. YD.)	CUM. NET VOL. (CU. YD.)
238+00.00	97.71	2.20	175.71	4.35	81534.75	521.32	81013.43
238+50.00	100.17	0.00	183.22	2.04	81717.97	523.36	81194.61
239+00.00	103.90	0.00	189.11	0.00	81907.08	523.36	81383.72
239+50.00	111.51	1.40	199.77	1.27	82106.84	524.63	81582.21
240+00.00	117.03	0.17	211.77	1.43	82318.62	526.07	81792.55
240+50.00	118.01	0.00	217.63	0.16	82536.24	526.22	82010.02
241+00.00	114.04	0.00	214.87	0.00	82751.11	526.23	82224.88
241+50.00	121.27	0.00	217.88	0.00	82968.99	526.23	82442.76
242+00.00	132.16	0.09	234.65	0.08	83203.64	526.31	82677.33
242+50.00	145.33	0.18	256.93	0.25	83460.57	526.56	82934.01
243+00.00	151.95	0.03	275.26	0.19	83735.83	526.75	83209.08
243+50.00	155.96	0.11	285.11	0.13	84020.94	526.88	83494.05
244+00.00	160.43	0.01	292.96	0.11	84313.90	526.99	83786.91
244+50.00	166.60	0.00	302.81	0.01	84616.71	526.99	84089.71
245+00.00	172.73	0.00	314.19	0.00	84930.90	526.99	84403.91
245+50.00	176.18	0.00	323.06	0.00	85253.96	526.99	84726.97
246+00.00	186.54	0.00	335.85	0.00	85589.82	526.99	85062.82
246+50.00	192.15	0.00	350.64	0.00	85940.46	526.99	85413.47
247+00.00	186.05	0.00	350.19	0.00	86290.64	526.99	85763.65
247+50.00	185.75	0.00	344.26	0.00	86634.90	526.99	86107.91
248+00.00	189.40	0.00	347.36	0.00	86982.27	526.99	86455.27
248+50.00	192.89	0.00	353.98	0.00	87336.24	527.00	86809.25
249+00.00	197.81	0.02	361.77	0.02	87698.01	527.02	87170.99
249+50.00	201.50	0.00	369.73	0.02	88067.75	527.04	87540.71
250+00.00	206.39	0.00	377.68	0.00	88445.42	527.04	87918.39
250+50.00	212.40	0.00	387.77	0.00	88833.20	527.04	88306.16
251+00.00	212.09	0.00	393.05	0.00	89226.25	527.04	88699.21
251+50.00	217.43	0.00	397.70	0.00	89623.95	527.04	89096.92
252+00.00	221.17	0.00	406.11	0.00	90030.06	527.04	89503.02
252+50.00	222.88	0.00	411.16	0.00	90441.22	527.04	89914.18
253+00.00	220.51	0.00	410.55	0.00	90851.77	527.04	90324.74
253+50.00	215.46	0.00	403.68	0.00	91255.45	527.04	90728.42
254+00.00	211.23	0.00	395.08	0.00	91650.54	527.04	91123.50
254+50.00	213.23	0.00	393.02	0.00	92043.56	527.04	91516.52
255+00.00	214.89	0.00	396.41	0.00	92439.96	527.04	91912.92
255+50.00	210.93	0.00	394.27	0.00	92834.23	527.04	92307.20
256+00.00	213.55	0.00	393.04	0.00	93227.27	527.04	92700.23
256+50.00	224.72	0.00	405.81	0.00	93633.08	527.04	93106.04
257+00.00	220.59	0.00	412.33	0.00	94045.40	527.04	93518.36
257+50.00	214.82	0.00	403.73	0.00	94449.13	527.04	93922.10

REVISION		
NO.	DATE	DESCRIPTION
1	---	---
2	---	---

PLOTTED 6-6-2016

STATUS FINAL

DRAWN BY F.R. | CHECKED BY J.A.M.

S&B INFRASTRUCTURE, LTD.
2120 BLAINE ST. LAREDO, TEXAS 78043
TELEPHONE: (956) 568-2561 FAX: (956) 994-0427
ENGINEERING # F-1582 SURVEYING # 10193914

ESPEJO GATES IMPROVEMENTS
WEBB COUNTY, TEXAS

EARTHWORK
TABULATION
SHEETS SUMMARY

REFERENCE FILE NAME

DRAWING FILE NAME
Cut and Fill- EARTH WORK

L:\PROJECTS\WEBB COUNTY\0233\Webb County TXDOT CERTIZ\dwg\SHEETS\1.GENERAL\DWG FILE\Cut and Fill- EARTH WORK.dwg

TOTAL VOLUME TABLE

STA:	FILL AREA (SQ. FT.)	CUT AREA (SQ. FT.)	FILL VOL. (CU. YD.)	CUT VOL (CU. YD.)	CUM. FILL VOL. (CU. YD.)	CUM. CUT VOL. (CU. YD.)	CUM. NET VOL. (CU. YD.)
258+00.00	201.55	0.00	386.20	0.00	94835.33	527.04	94308.29
258+50.00	188.89	0.00	362.20	0.00	95197.53	527.04	94670.49
259+00.00	188.19	0.00	349.73	0.00	95547.26	527.04	95020.22
259+50.00	188.63	0.00	349.36	0.00	95896.62	527.04	95369.58
260+00.00	192.98	0.00	353.34	0.00	96249.96	527.04	95722.92
260+50.00	192.78	0.00	357.18	0.00	96607.14	527.04	96080.11
261+00.00	195.94	0.00	359.93	0.00	96967.08	527.04	96440.04
261+50.00	198.16	0.00	364.91	0.00	97331.99	527.04	96804.95
262+00.00	195.30	0.00	364.32	0.00	97696.31	527.04	97169.27
262+50.00	196.37	0.00	362.66	0.00	98058.97	527.04	97531.93
263+00.00	204.23	0.00	370.93	0.00	98429.89	527.04	97902.86
263+50.00	207.49	0.00	381.22	0.00	98811.12	527.04	98284.08
264+00.00	200.44	0.00	377.72	0.00	99188.84	527.04	98661.80
264+50.00	197.22	0.00	368.21	0.00	99557.05	527.04	99030.01
265+00.00	194.93	0.00	363.10	0.00	99920.15	527.04	99393.11
265+50.00	193.85	0.00	359.98	0.00	100280.13	527.04	99753.09
266+00.00	193.45	0.00	358.62	0.00	100638.75	527.04	100111.71
266+50.00	194.69	0.00	359.39	0.00	100998.14	527.04	100471.10
267+00.00	198.24	0.00	363.82	0.00	101361.96	527.04	100834.93
267+50.00	190.21	0.00	359.68	0.00	101721.64	527.04	101194.60
268+00.00	154.90	0.00	319.54	0.00	102041.18	527.04	101514.15
268+50.00	105.80	0.00	241.38	0.00	102282.57	527.04	101755.53
269+00.00	49.15	0.14	143.47	0.13	102426.03	527.16	101898.87
269+50.00	39.28	0.00	81.88	0.13	102507.92	527.29	101980.63
270+00.00	49.84	0.00	82.52	0.00	102590.44	527.29	102063.15
270+50.00	64.70	0.00	106.05	0.00	102696.49	527.29	102169.20
271+00.00	91.18	0.00	144.33	0.00	102840.82	527.29	102313.53
271+50.00	107.88	0.00	184.31	0.00	103025.13	527.29	102497.84
272+00.00	105.50	0.00	197.57	0.00	103222.70	527.29	102695.41
272+50.00	105.44	0.00	195.31	0.00	103418.02	527.29	102890.73
273+00.00	109.06	0.00	198.61	0.00	103616.63	527.29	103089.34
273+50.00	117.11	0.00	209.41	0.00	103826.04	527.29	103298.75
274+00.00	120.70	0.00	220.20	0.00	104046.24	527.29	103518.95
274+50.00	125.76	0.00	228.21	0.00	104274.45	527.29	103747.16
275+00.00	123.25	0.00	230.57	0.00	104505.02	527.29	103977.73
275+50.00	122.79	0.01	227.82	0.01	104732.84	527.30	104205.54
276+00.00	123.28	0.15	227.84	0.15	104960.67	527.44	104433.23
276+50.00	132.05	0.01	236.41	0.15	105197.08	527.59	104669.49
277+00.00	130.23	0.00	242.85	0.01	105439.93	527.60	104912.34
277+50.00	132.46	0.00	243.23	0.00	105683.17	527.60	105155.57

TOTAL VOLUME TABLE

STA:	FILL AREA (SQ. FT.)	CUT AREA (SQ. FT.)	FILL VOL. (CU. YD.)	CUT VOL (CU. YD.)	CUM. FILL VOL. (CU. YD.)	CUM. CUT VOL. (CU. YD.)	CUM. NET VOL. (CU. YD.)
278+00.00	139.94	0.00	252.22	0.00	105935.39	527.60	105407.79
278+50.00	131.92	0.00	251.72	0.00	106187.11	527.60	105659.51
279+00.00	132.23	0.00	244.58	0.00	106431.69	527.60	105904.09
279+50.00	121.97	0.00	235.37	0.00	106667.06	527.60	106139.46
280+00.00	125.23	0.01	228.89	0.01	106895.95	527.61	106368.34
280+50.00	123.08	0.00	229.91	0.01	107125.86	527.62	106598.24
281+00.00	119.37	0.01	224.49	0.01	107350.35	527.63	106822.72
281+50.00	104.21	0.17	207.02	0.17	107557.37	527.80	107029.58
282+00.00	100.14	0.01	189.22	0.17	107746.59	527.97	107218.62
282+50.00	93.46	0.01	179.26	0.02	107925.85	527.99	107397.85
283+00.00	82.70	0.00	163.11	0.01	108088.96	528.00	107560.96
283+50.00	70.79	0.00	142.12	0.00	108231.08	528.01	107703.08
284+00.00	65.43	0.00	126.13	0.00	108357.21	528.01	107829.20
284+50.00	57.92	0.00	114.21	0.00	108471.42	528.01	107943.41
285+00.00	56.07	0.06	105.55	0.05	108576.97	528.06	108048.91
285+50.00	54.08	0.00	102.00	0.06	108678.96	528.11	108150.85
286+00.00	56.07	0.00	102.00	0.00	108780.96	528.12	108252.84
286+50.00	50.31	0.14	98.50	0.13	108879.46	528.24	108351.22
287+00.00	42.20	0.06	85.66	0.18	108965.12	528.42	108436.70
287+50.00	39.00	0.01	75.19	0.06	109040.31	528.48	108511.83
288+00.00	33.00	0.00	66.67	0.01	109106.98	528.49	108578.50
288+50.00	34.18	0.00	62.21	0.00	109169.19	528.49	108640.71
289+00.00	31.60	0.00	60.92	0.00	109230.11	528.49	108701.62
289+50.00	34.62	0.00	61.32	0.00	109291.42	528.49	108762.94
290+00.00	45.00	0.00	73.72	0.00	109365.15	528.49	108836.66
290+50.00	47.08	0.00	85.26	0.00	109450.41	528.49	108921.92
291+00.00	51.96	0.00	91.70	0.00	109542.11	528.49	109013.62
291+50.00	44.58	0.05	89.38	0.05	109631.50	528.54	109102.96
292+00.00	46.10	2.18	83.97	2.07	109715.46	530.61	109184.85
292+50.00	59.44	3.38	97.92	4.80	109813.38	535.41	109277.98
293+00.00	29.82	3.29	82.32	6.33	109895.70	541.73	109353.97
293+50.00	0.00	0.00	27.52	3.31	109923.22	545.04	109378.18

REVISION		
NO.	DATE	DESCRIPTION
1	---	---
2	---	---

PLOTTED 6-6-2016

STATUS FINAL

DRAWN BY F.R.

CHECKED BY J.A.M.

S&B INFRASTRUCTURE, LTD.
2120 BLAINE ST. LAREDO, TEXAS 78043
TELEPHONE: (956) 568-2561 FAX: (956) 994-0427
ENGINEERING # F-1582 SURVEYING # 10193914

ESPEJO GATES IMPROVEMENTS
WEBB COUNTY, TEXAS

EARTHWORK TABULATION SHEETS SUMMARY

REFERENCE FILE NAME
-
DRAWING FILE NAME
Cut and Fill- EARTH WORK

L:\PROJECTS\WEBB COUNTY\U233\Webb County TxDOT CERTEDdwg\SHEETS\1-GENERAL\DWG FILE\Cut and Fill- EARTH WORK.dwg

ESPEJO GATES ROAD TRAFFIC CONTROL PLAN - SIGNAGE PLAN

SCALE: N.T.S.

NOTE:
PROVIDE DETOUR SIGNS AT THE INTERSECTION OF EXISTING BRANCH STREETS WITH ESPEJO GATES ROAD AT VARIOUS PHASES OF THE ROAD CONSTRUCTION FOR RESIDENTS ACCESSING 2688 COUNTY ROAD AND HWY 83.

GENERAL NOTES:

1. FOR SIGN SPACING SEE BC (2) -07
2. PROJECT BARRICADES TO REMAIN IN PLACE THROUGHOUT DURATION OF PROJECT.
3. AS PER BC (2)-07 CW20-1D MAY BE MOUNTED ON BACK OF G20-A WITH APPROVAL OF ENGINEER.
4. SIGNS SHOWN ARE FOR ILLUSTRATION CONTRACTOR SHALL REFER TO SIGN LAYOUT FOR ARROW DIRECTIONS, AND INFORM ENGINEER OF ANY DISCREPANCIES.

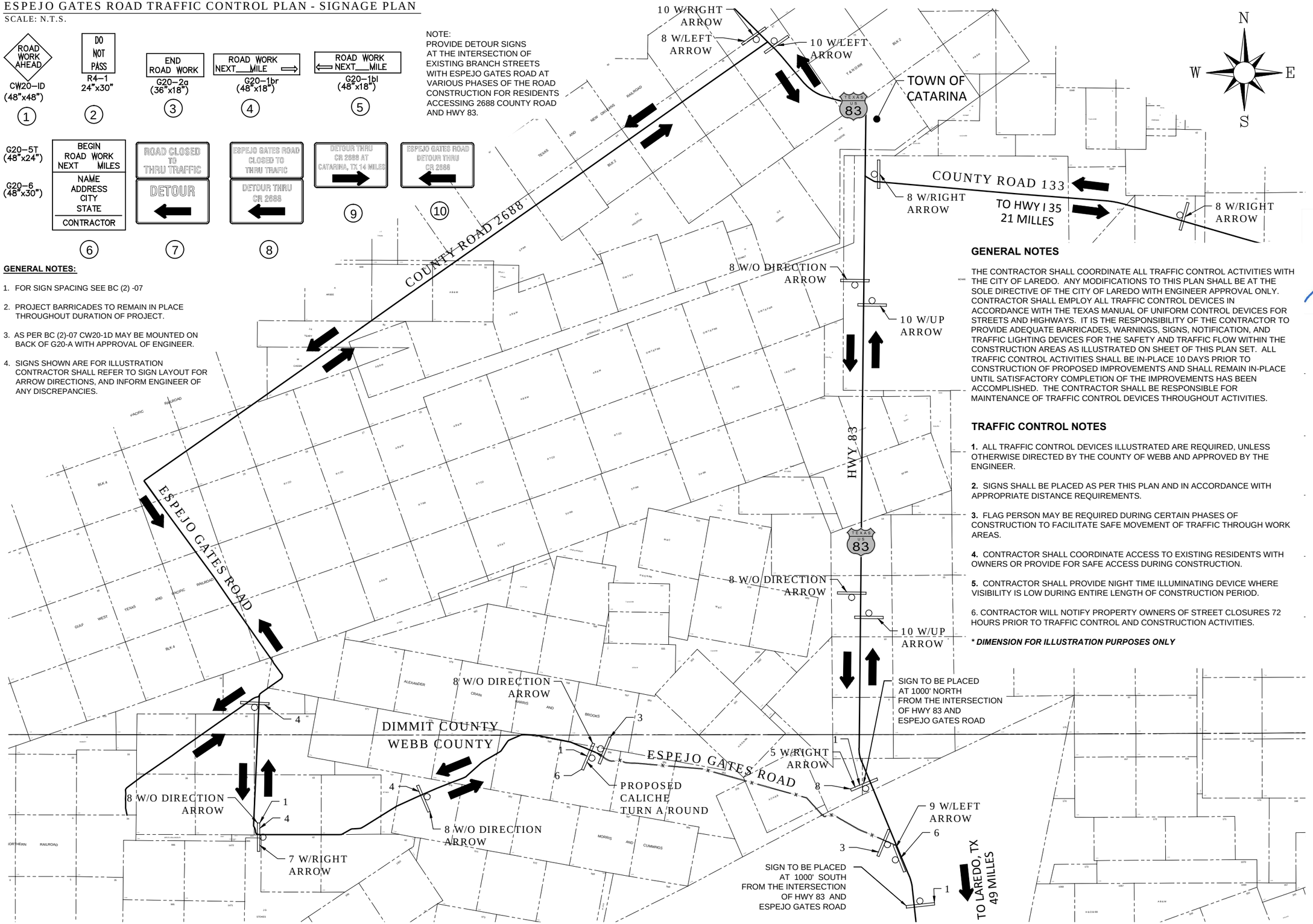

GENERAL NOTES

THE CONTRACTOR SHALL COORDINATE ALL TRAFFIC CONTROL ACTIVITIES WITH THE CITY OF LAREDO. ANY MODIFICATIONS TO THIS PLAN SHALL BE AT THE SOLE DIRECTIVE OF THE CITY OF LAREDO WITH ENGINEER APPROVAL ONLY. CONTRACTOR SHALL EMPLOY ALL TRAFFIC CONTROL DEVICES IN ACCORDANCE WITH THE TEXAS MANUAL OF UNIFORM CONTROL DEVICES FOR STREETS AND HIGHWAYS. IT IS THE RESPONSIBILITY OF THE CONTRACTOR TO PROVIDE ADEQUATE BARRICADES, WARNINGS, SIGNS, NOTIFICATION, AND TRAFFIC LIGHTING DEVICES FOR THE SAFETY AND TRAFFIC FLOW WITHIN THE CONSTRUCTION AREAS AS ILLUSTRATED ON SHEET OF THIS PLAN SET. ALL TRAFFIC CONTROL ACTIVITIES SHALL BE IN-PLACE 10 DAYS PRIOR TO CONSTRUCTION OF PROPOSED IMPROVEMENTS AND SHALL REMAIN IN-PLACE UNTIL SATISFACTORY COMPLETION OF THE IMPROVEMENTS HAS BEEN ACCOMPLISHED. THE CONTRACTOR SHALL BE RESPONSIBLE FOR MAINTENANCE OF TRAFFIC CONTROL DEVICES THROUGHOUT ACTIVITIES.

TRAFFIC CONTROL NOTES

1. ALL TRAFFIC CONTROL DEVICES ILLUSTRATED ARE REQUIRED, UNLESS OTHERWISE DIRECTED BY THE COUNTY OF WEBB AND APPROVED BY THE ENGINEER.

2. SIGNS SHALL BE PLACED AS PER THIS PLAN AND IN ACCORDANCE WITH APPROPRIATE DISTANCE REQUIREMENTS.

3. FLAG PERSON MAY BE REQUIRED DURING CERTAIN PHASES OF CONSTRUCTION TO FACILITATE SAFE MOVEMENT OF TRAFFIC THROUGH WORK AREAS.

4. CONTRACTOR SHALL COORDINATE ACCESS TO EXISTING RESIDENTS WITH OWNERS OR PROVIDE FOR SAFE ACCESS DURING CONSTRUCTION.

5. CONTRACTOR SHALL PROVIDE NIGHT TIME ILLUMINATING DEVICE WHERE VISIBILITY IS LOW DURING ENTIRE LENGTH OF CONSTRUCTION PERIOD.

6. CONTRACTOR WILL NOTIFY PROPERTY OWNERS OF STREET CLOSURES 72 HOURS PRIOR TO TRAFFIC CONTROL AND CONSTRUCTION ACTIVITIES.

**** DIMENSION FOR ILLUSTRATION PURPOSES ONLY***

REVISION		
NO.	DATE	DESCRIPTION
1	---	---
2	---	---

PLOTTED 6-6-2016

STATUS FINAL

STATE OF TEXAS
FRANCISCO RAMOS
108833
LICENSED PROFESSIONAL ENGINEER

6/6/2016

DRAWN BY J.S. | CHECKED BY J.A.M.

S&B INFRASTRUCTURE, LTD.
2120 BLAINE ST. LAREDO, TEXAS 78043
TELEPHONE: (956) 568-2561 FAX: (956) 994-0027
ENGINEERING # F-1582 SURVEYING # 10193914

ESPEJO GATES ROAD
WEBB COUNTY, TEXAS

TRAFFIC CONTROL PLAN

REFERENCE FILE NAME -

DRAWING FILE NAME TRAFFIC CONTROL PLAN

L:\PROJECTS\WEBB COUNTY\0223380\Webb County TxDOT CERTEZ\dwg\SHEETS\2-7 RAFFIC CONTROL PLAN\TRAFFIC CONTROL PLAN.dwg

ESPEJO GATES ROAD TRAFFIC CONTROL PLAN - SIGNAGE PLAN

SCALE: N.T.S.

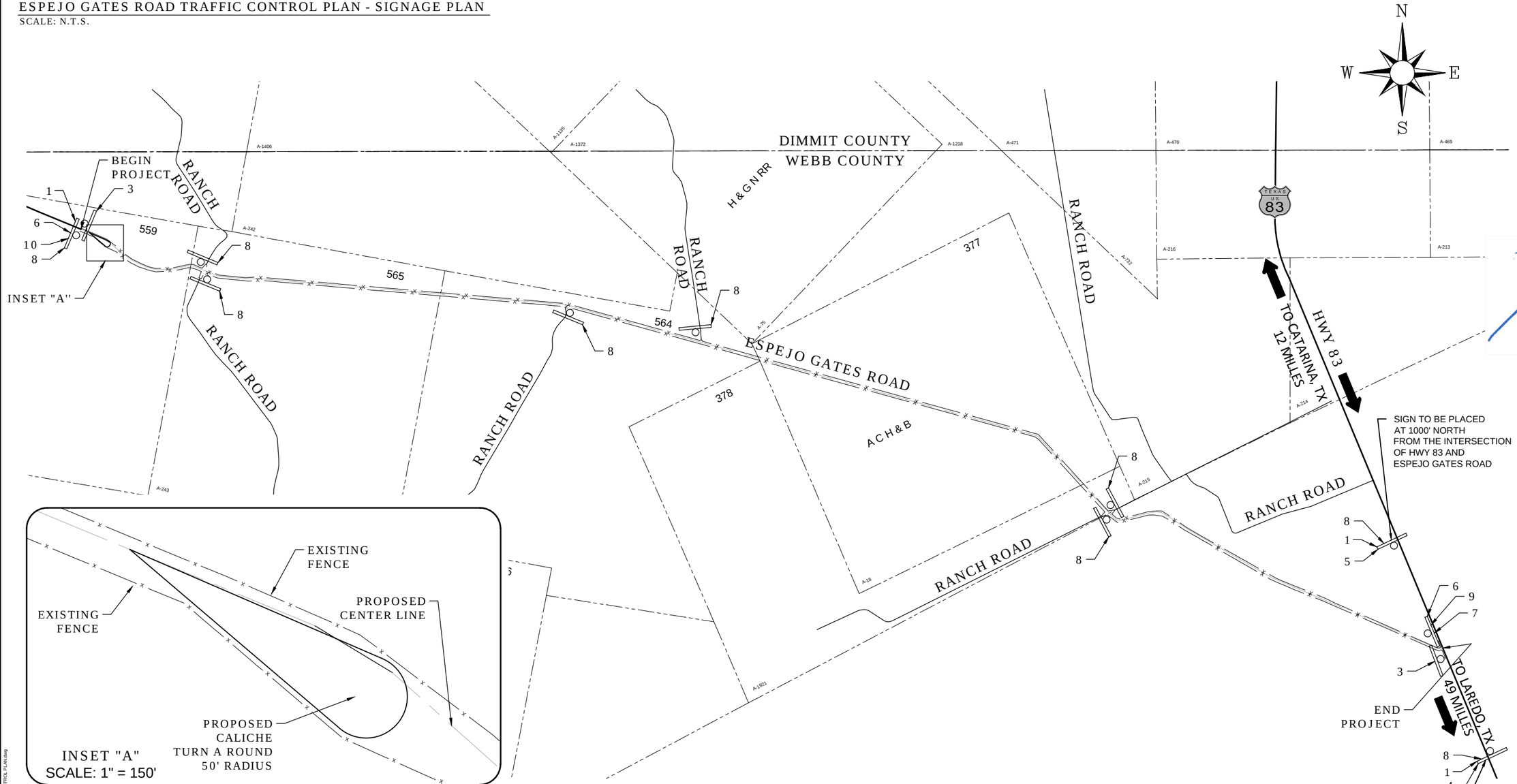

UTILITY DEPARTMENTS LAREDO, TEXAS
WATER DISTRIBUTION AND SANITARY SEWER ROLANDO LOZANO **LAREDO WATER UTILITIES DEPARTMENT** (956) 794-1625
ELECTRIC COMPANY **A. E. P.** (956) 721-3169
TELEPHONE COMPANY **ATT** (956) 727-6749
CABLE COMPANY **TIME WARNER CABLE** (956) 721-0600

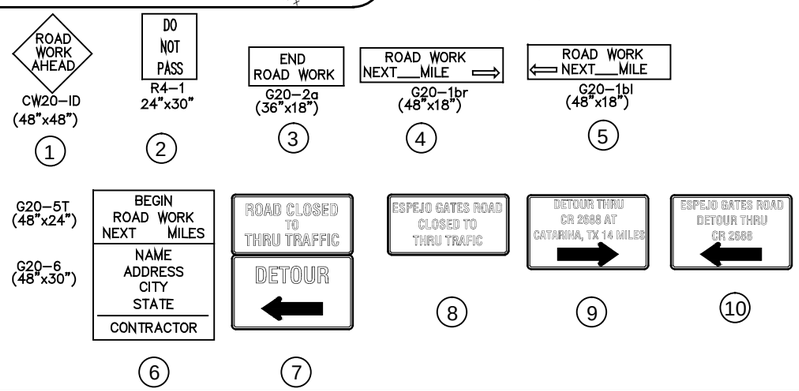

NOTE:
PROVIDE DETOUR SIGNS AT THE INTERSECTION OF EXISTING BRANCH STREETS WITH ESPEJO GATES ROAD AT VARIOUS PHASES OF THE ROAD CONSTRUCTION FOR RESIDENTS ACCESSING 2688 COUNTY ROAD AND HWY 83.

GENERAL NOTES:

1. FOR SIGN SPACING SEE BC (2) -07
2. PROJECT BARRICADES TO REMAIN IN PLACE THROUGHOUT DURATION OF PROJECT.
3. AS PER BC (2)-07 CW20-1D MAY BE MOUNTED ON BACK OF G20-A WITH APPROVAL OF ENGINEER.

REVISION		
NO.	DATE	DESCRIPTION
1	---	---
2	---	---

PLOTTED 6-6-2016

STATUS FINAL

STATE OF TEXAS
FRANCISCO RAMOS
108833
LICENSED PROFESSIONAL ENGINEER

DRAWN BY J.S. | CHECKED BY J.A.M.

6/6/2016

S&B INFRASTRUCTURE, LTD.
2120 BLAINE ST. LAREDO, TEXAS 78043
TELEPHONE: (956) 568-2561 FAX: (956) 994-0027
ENGINEERING # F-1582 SURVEYING # 10193914

ESPEJO GATES ROAD
WEBB COUNTY, TEXAS

TRAFFIC CONTROL PLAN

REFERENCE FILE NAME -

DRAWING FILE NAME TRAFFIC CONTROL PLAN

L:\PROJECTS\WEBB COUNTY\02338\Webb County T-6\DOT CERTE\dwg\SHEETS\2-TRAFFIC CONTROL PLAN\TRAFFIC CONTROL PLAN.dwg

DISCLAIMER: The use of this standard is governed by the "Texas Engineering Practice Act". No warranty of any kind is made by TxDOT for any purpose whatsoever. TxDOT assumes no responsibility for the conversion of this standard to other formats or for incorrect results or damages resulting from its use.

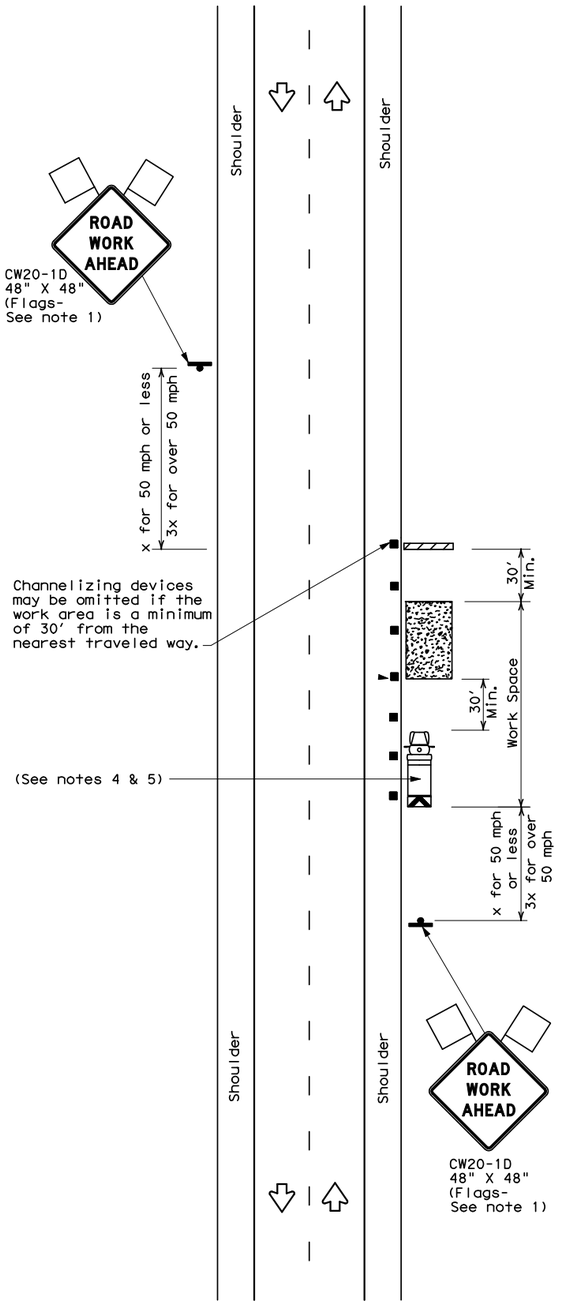

TCP (2-1a)

WORK SPACE NEAR SHOULDER

Conventional Roads

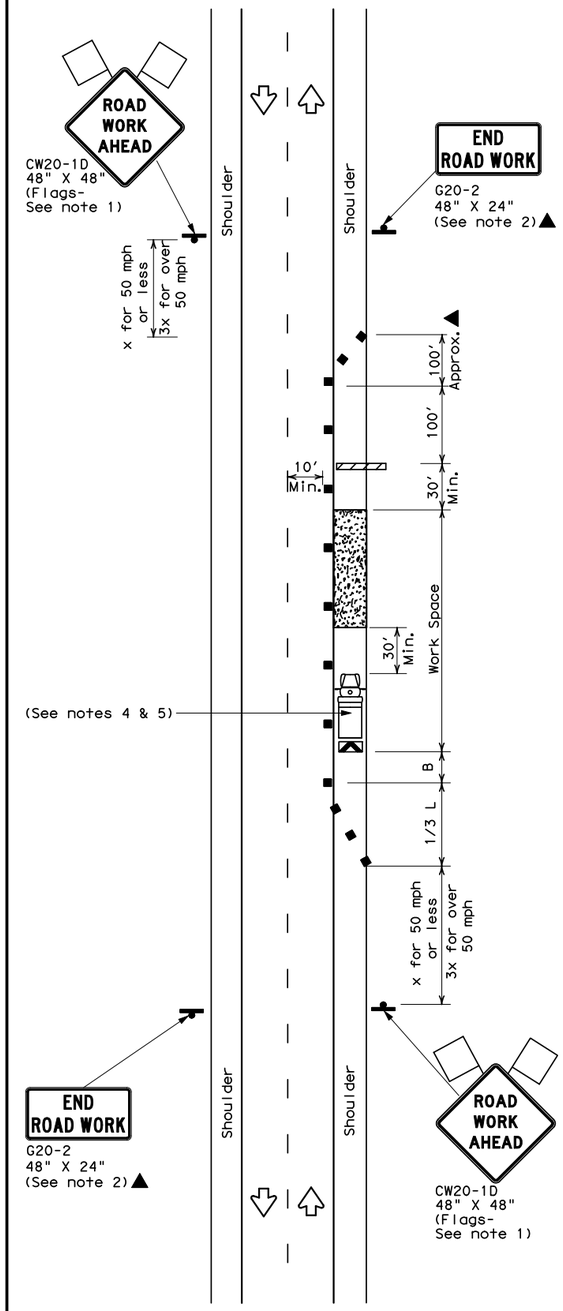

TCP (2-1b)

WORK SPACE ON SHOULDER

Conventional Roads

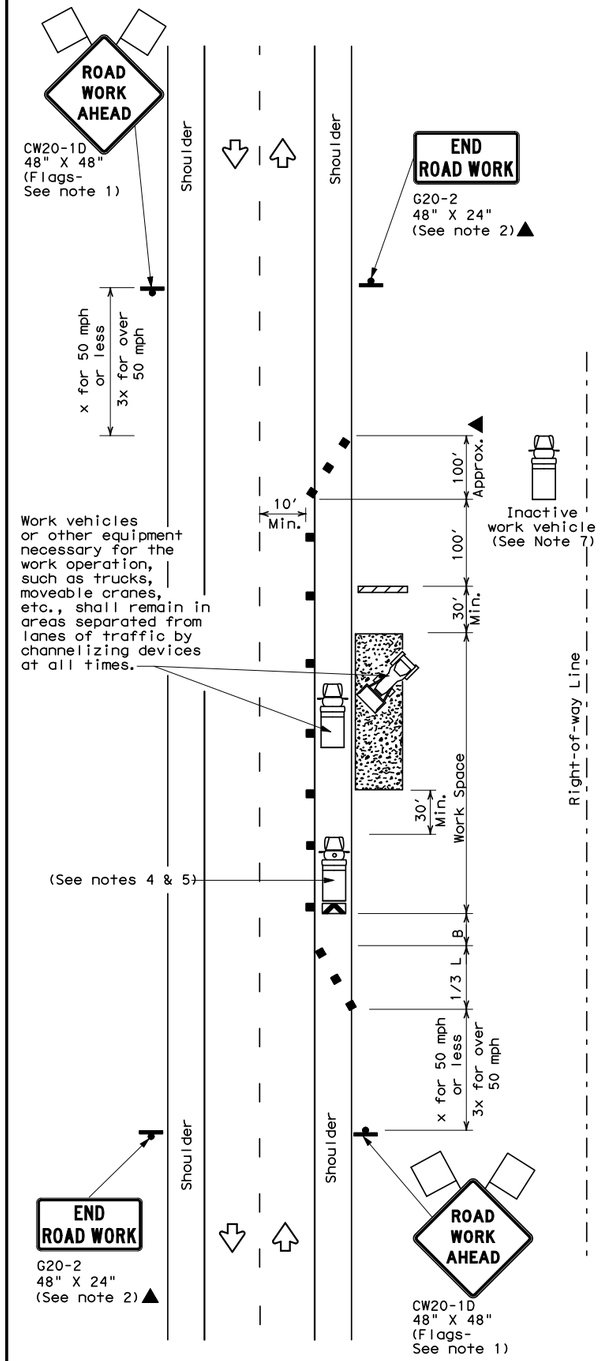

TCP (2-1c)

WORK VEHICLES ON SHOULDER

Conventional Roads

LEGEND

	Type 3 Barricade	■ ■	Channelizing Devices
	Heavy Work Vehicle		Truck Mounted Attenuator (TMA)
	Trailer Mounted Flashing Arrow Board	(M)	Portable Changeable Message Sign (PCMS)
	Sign		Traffic Flow
	Flag		Flagger

Posted Speed ✳	Formula	Minimum Desirable Taper Lengths ✳✳			Suggested Maximum Spacing of Channelizing Devices		Minimum Sign Spacing "X" Distance	Suggested Longitudinal Buffer Space "B"
		10' Offset	11' Offset	12' Offset	On a Taper	On a Tangent		
30	$L = \frac{WS^2}{60}$	150'	165'	180'	30'	60'	120'	90'
35		205'	225'	245'	35'	70'	160'	120'
40		265'	295'	320'	40'	80'	240'	155'
45	L = WS	450'	495'	540'	45'	90'	320'	195'
50		500'	550'	600'	50'	100'	400'	240'
55		550'	605'	660'	55'	110'	500'	295'
60		600'	660'	720'	60'	120'	600'	350'
65		650'	715'	780'	65'	130'	700'	410'
70		700'	770'	840'	70'	140'	800'	475'
75		750'	825'	900'	75'	150'	900'	540'

✳ Conventional Roads Only

✳✳ Taper lengths have been rounded off.
L=Length of Taper(FT) W=Width of Offset(FT) S=Posted Speed(MPH)

TYPICAL USAGE

MOBILE	SHORT DURATION	SHORT TERM STATIONARY	INTERMEDIATE TERM STATIONARY	LONG TERM STATIONARY
	✓	✓	✓	✓

GENERAL NOTES

1. Flags attached to signs where shown, are REQUIRED.
2. All traffic control devices illustrated are REQUIRED, except those denoted with the triangle symbol may be omitted when stated in the plans, or for routine maintenance work, when approved by the Engineer.
3. Stockpiled material should be placed a minimum of 30 feet from nearest traveled way.
4. Shadow Vehicle with TMA and high intensity rotating, flashing, oscillating or strobe lights. A Shadow Vehicle with a TMA should be used anytime it can be positioned 30 to 100 feet in advance of the area of crew exposure without adversely affecting the performance or quality of the work. If workers are no longer present but road or work conditions require the traffic control to remain in place, Type 3 Barricades or other channelizing devices may be substituted for the Shadow Vehicle and TMA.
5. Additional Shadow Vehicles with TMAs may be positioned off the paved surface, next to those shown in order to protect a wider work space.
6. See TCP(5-1) for shoulder work on divided highways, expressways and freeways.
7. Inactive work vehicles or other equipment should be parked near the right-of-way line and not parked on the paved shoulder.
8. CW21-5 "SHOULDER WORK" signs may be used in place of CW21-1D "ROAD WORK AHEAD" signs for shoulder work on conventional roadways.

For construction or maintenance contract work, specific project requirements for shadow vehicles can be found in the project GENERAL NOTES for Item 502, Barricades, Signs and Traffic Handling.

Texas Department of Transportation
Traffic Operations Division

TRAFFIC CONTROL PLAN CONVENTIONAL ROAD SHOULDER WORK

TCP(2-1)-12

© TxDOT December 1985

DN: TXDOT	CK: TXDOT	DW: TXDOT	CK: TXDOT
CONT	SECT	JOB	HIGHWAY
DIST	COUNTY		SHEET NO.
			21 OF 152

REVISIONS
2-94 2-12
8-95
1-97
4-98

DATE:
FILE:

DISCLAIMER: The use of this standard is governed by the "Texas Engineering Practice Act". No warranty of any kind is made by TxDOT for any purpose whatsoever. TxDOT assumes no responsibility for the conversion of this standard to other formats or for incorrect results or damages resulting from its use.

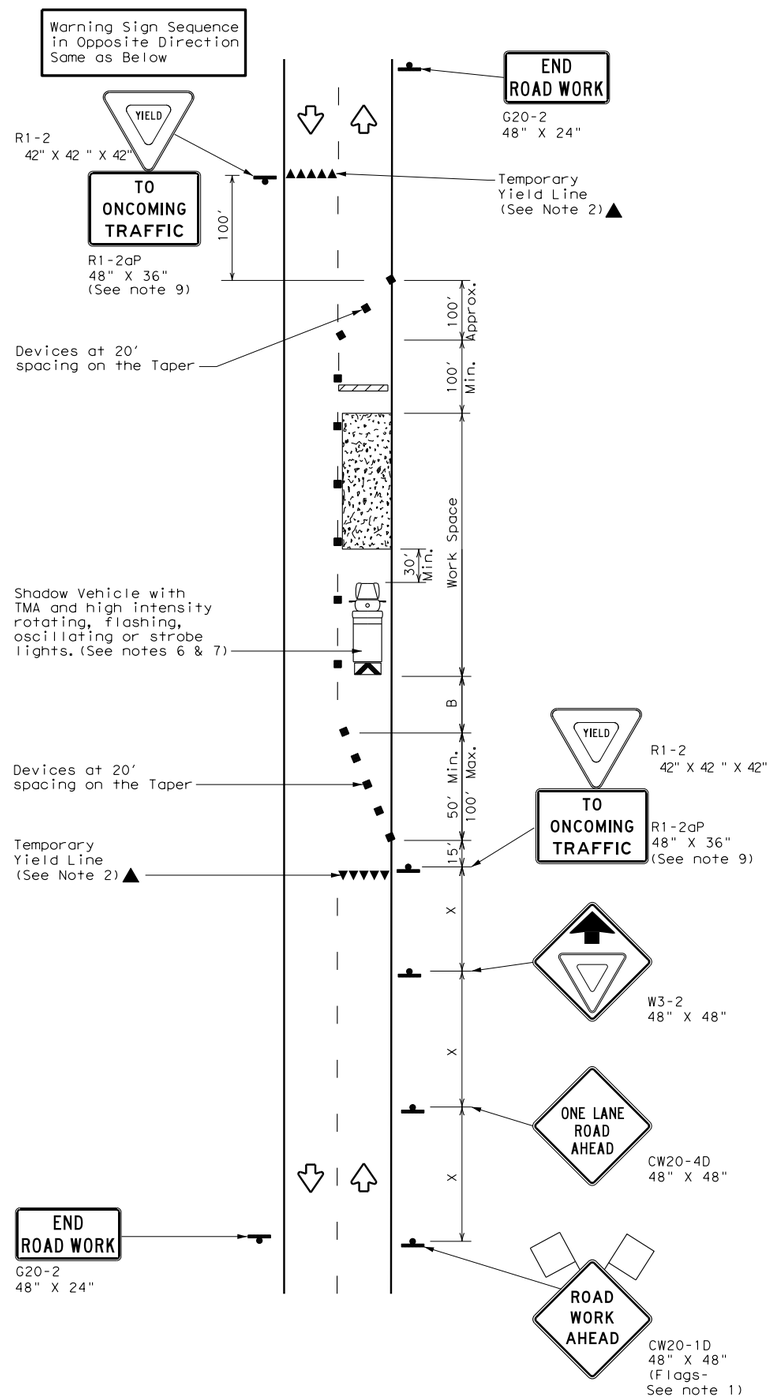

TCP (2-2a)

2-LANE ROADWAY WITHOUT PAVED SHOULDERS

ONE LANE TWO-WAY CONTROL WITH YIELD SIGNS

(Less than 2000 ADT - See Note 9)

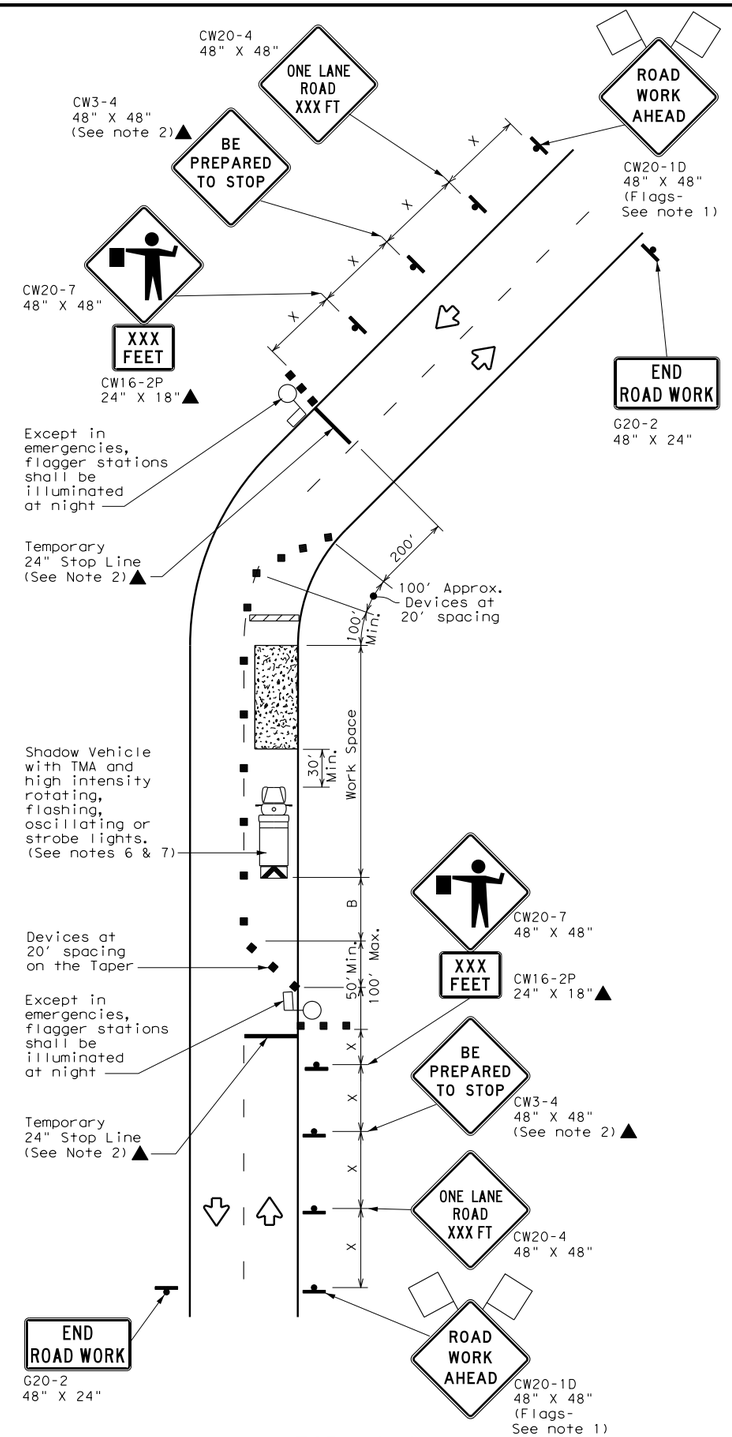

TCP (2-2b)

2-LANE ROADWAY WITHOUT PAVED SHOULDERS

ONE LANE TWO-WAY CONTROL WITH FLAGGERS

LEGEND

	Type 3 Barricade		Channelizing Devices
	Heavy Work Vehicle		Truck Mounted Attenuator (TMA)
	Trailer Mounted Flashing Arrow Board	M	Portable Changeable Message Sign (PCMS)
	Sign		Traffic Flow
	Flag		Flagger

Posted Speed ✱	Formula	Minimum Desirable Taper Lengths ✱✱ 10' Offset	11' Offset	12' Offset	Suggested Maximum Spacing of Channelizing Devices On a Taper	On a Tangent	Minimum Sign Spacing "X" Distance	Suggested Longitudinal Buffer Space "B"	Stopping Sight Distance
30	$L = \frac{WS^2}{60}$	150'	165'	180'	30'	60'	120'	90'	200'
35		205'	225'	245'	35'	70'	160'	120'	250'
40		265'	295'	320'	40'	80'	240'	155'	305'
45	L = WS	450'	495'	540'	45'	90'	320'	195'	360'
50		500'	550'	600'	50'	100'	400'	240'	425'
55		550'	605'	660'	55'	110'	500'	295'	495'
60		600'	660'	720'	60'	120'	600'	350'	570'
65		650'	715'	780'	65'	130'	700'	410'	645'
70		700'	770'	840'	70'	140'	800'	475'	730'
75		750'	825'	900'	75'	150'	900'	540'	820'

✱ Conventional Roads Only

✱✱ Taper lengths have been rounded off.

L=Length of Taper(FT) W=Width of Offset(FT) S=Posted Speed(MPH)

TYPICAL USAGE

MOBILE	SHORT DURATION	SHORT TERM STATIONARY	INTERMEDIATE TERM STATIONARY	LONG TERM STATIONARY
	✓	✓	✓	

GENERAL NOTES

1. Flags attached to signs where shown, are REQUIRED.
2. All traffic control devices illustrated are REQUIRED, except those denoted with the triangle symbol may be omitted when stated elsewhere in the plans, or for routine maintenance work, when approved by the Engineer.
3. The CW3-4 "BE PREPARED TO STOP" sign may be installed after the CW20-4 "ONE LANE ROAD XXX FT" sign, but proper sign spacing shall be maintained.
4. Flaggers should use two-way radios or other methods of communication to control traffic.
5. Length of work space should be based on the ability of flaggers to communicate.
6. A Shadow Vehicle with a TMA should be used anytime it can be positioned 30 to 100 feet in advance of the area of crew exposure without adversely affecting the performance or quality of the work. If workers are no longer present but road or work conditions require the traffic control to remain in place, Type 3 Barricades or other channelizing devices may be substituted for the Shadow Vehicle and TMA.
7. Additional Shadow Vehicles with TMAs may be positioned off the paved surface, next to those shown in order to protect a wider work space.

TCP (2-2a)

8. The R1-2 "YIELD" sign traffic control may be used on projects with approaches that have adequate sight distance. For projects in urban areas, work space should be no longer than one half city block. In rural areas, roadways with less than 2000 ADT, work space should be no longer than 400 feet.
9. The R1-2aP "YIELD TO ONCOMING TRAFFIC" sign shall be placed on a support at a 7 foot minimum mounting height.

TCP (2-2b)

10. Channelizing devices on the center line may be omitted when a pilot car is leading traffic and approved by the Engineer.
11. If the work space is located near a horizontal or vertical curve, the buffer distances should be increased in order to maintain stopping sight distance to the flagger and a queue of stopped vehicles. (See table above).
12. Flaggers should use 24" STOP/SLOW paddles to control traffic. Flags should be limited to emergency situtations.

For construction or maintenance contract work, specific project requirements for shadow vehicles can be found in the project GENERAL NOTES for Item 502, Barricades, Signs and Traffic Handling.

Texas Department of Transportation
Traffic Operations Division

TRAFFIC CONTROL PLAN ONE-LANE TWO-WAY TRAFFIC CONTROL

TCP(2-2)-12

©TxDOT December 1985

DN: TXDOT	CK: TXDOT	DW: TXDOT	CK: TXDOT
REVISIONS	CONT	SECT	JOB	HIGHWAY
8-95 2-12				
1-97				
4-98	DIST	COUNTY		SHEET NO.
3-03				22 OF 152

162

DATE:
FILE:

DISCLAIMER: The use of this standard is governed by the "Texas Engineering Practice Act". No warranty of any kind is made by TxDOT for any purpose whatsoever. TxDOT assumes no responsibility for the conversion of this standard to other formats or for incorrect results or damages resulting from its use.

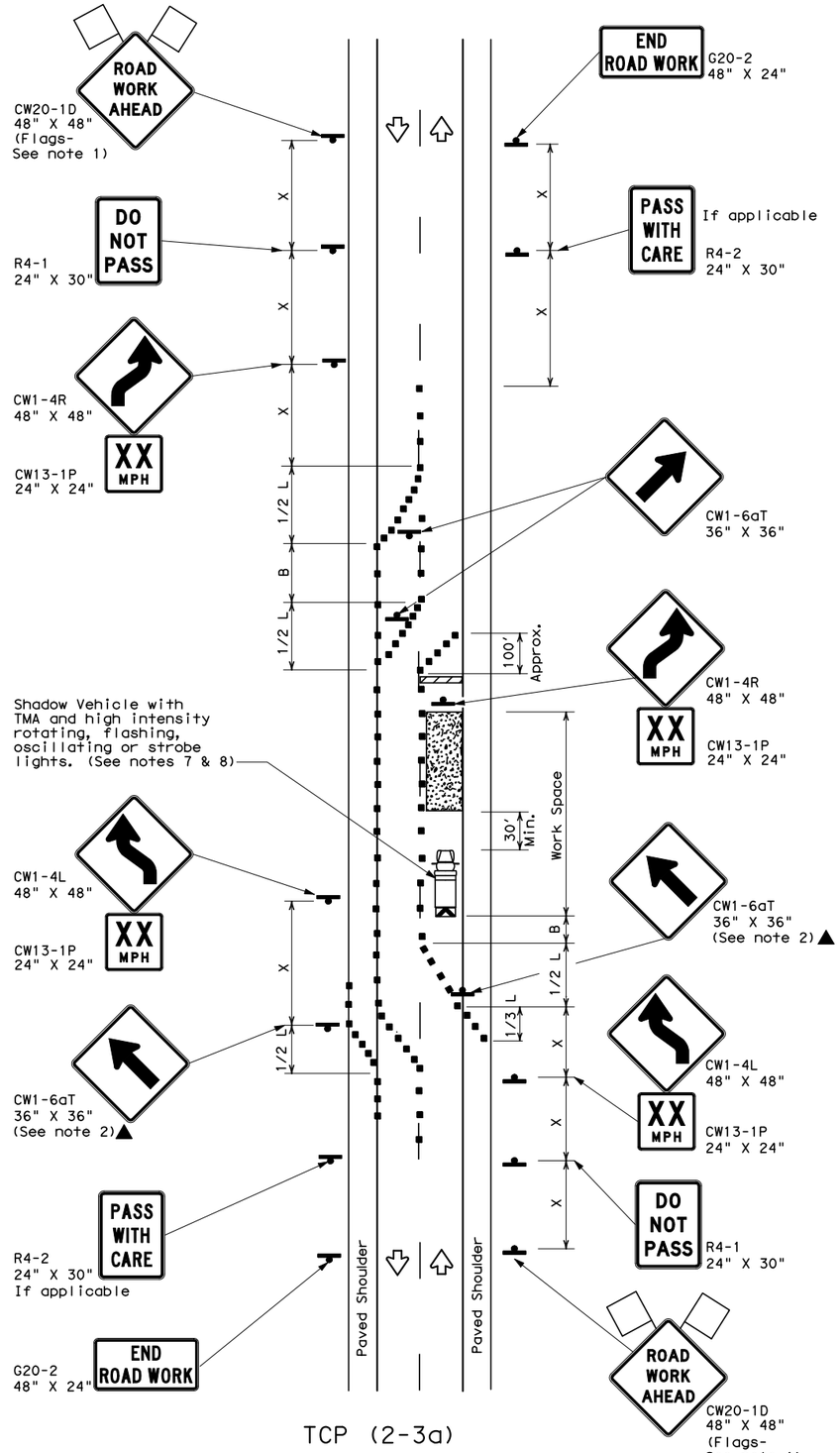

TCP (2-3a)

2-LANE ROADWAY WITH PAVED SHOULDERS

ONE LANE CLOSED

ADEQUATE FIELD OF VIEW

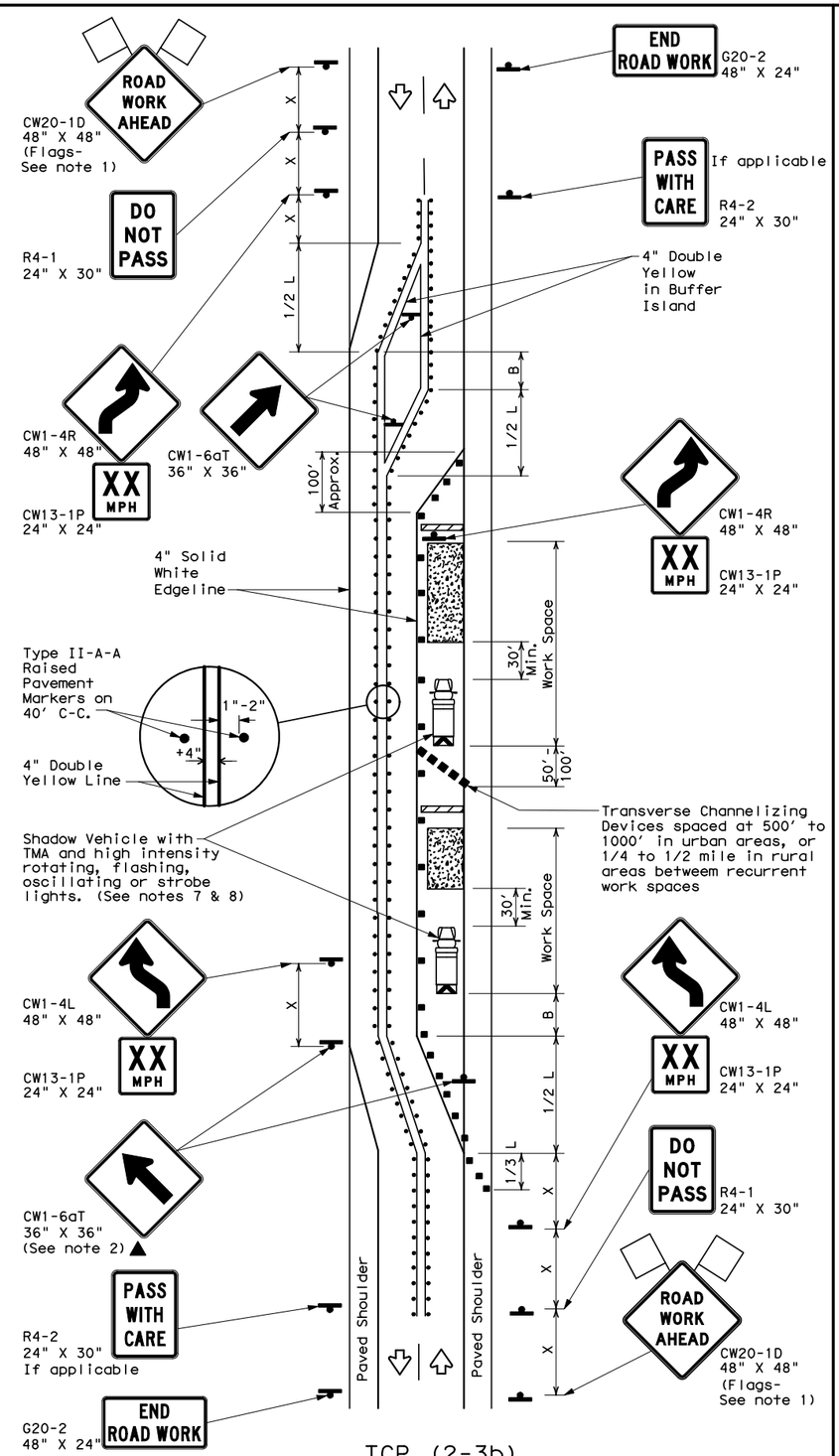

TCP (2-3b)

2-LANE ROADWAY WITH PAVED SHOULDERS

ONE LANE CLOSED

INADEQUATE FIELD OF VIEW

LEGEND

	Type 3 Barricade		Channelizing Devices
	Heavy Work Vehicle		Truck Mounted Attenuator (TMA)
	Trailer Mounted Flashing Arrow Board		Raised Pavement Markers Ty II-AA
	Sign		Traffic Flow
	Flag		Flagger

Posted Speed ✱	Formula	Minimum Desirable Taper Lengths ✱✱ 10' Offset	11' Offset	12' Offset	Suggested Maximum Spacing of Channelizing Devices On a Taper	On a Tangent	Minimum Sign Spacing "X" Distance	Suggested Longitudinal Buffer Space "B"
30	$L=\frac{WS^2}{60}$	150'	165'	180'	30'	60'	120'	90'
35		205'	225'	245'	35'	70'	160'	120'
40		265'	295'	320'	40'	80'	240'	155'
45	L=WS	450'	495'	540'	45'	90'	320'	195'
50		500'	550'	600'	50'	100'	400'	240'
55		550'	605'	660'	55'	110'	500'	295'
60		600'	660'	720'	60'	120'	600'	350'
65		650'	715'	780'	65'	130'	700'	410'
70		700'	770'	840'	70'	140'	800'	475'
75		750'	825'	900'	75'	150'	900'	540'

✱ Conventional Roads Only

✱✱ Taper lengths have been rounded off.

L=Length of Taper(FT) W=Width of Offset(FT) S=Posted Speed(MPH)

TYPICAL USAGE

MOBILE	SHORT DURATION	SHORT TERM STATIONARY	INTERMEDIATE TERM STATIONARY	LONG TERM STATIONARY TCP(2-3b) ONLY
			✓	✓

GENERAL NOTES

1. Flags attached to signs where shown, are REQUIRED.
2. All traffic control devices illustrated are REQUIRED, except those denoted with the triangle symbol may be omitted when stated elsewhere in the plans, or for routine maintenance work, when approved by the Engineer.
3. When work space will be in place less than three days existing pavement markings may remain in place. Channelizing devices shall be used to separate traffic.
4. Flagger control should NOT be used unless roadway conditions or heavy traffic volume require additional emphasis to safely control traffic. Flagger should be positioned at end of traffic queue.
5. The R4-1 "DO NOT PASS," R4-2 " PASS WITH CARE" and construction regulatory speed zone signs may be installed within CW20-1D "ROAD WORK AHEAD" signs. Proper spacing of signs shall be maintained.
6. Conflicting pavement marking shall be removed for long term projects.
7. A Shadow Vehicle with a TMA should be used anytime it can be positioned 30 to 100 feet in advance of the area of crew exposure without adversely affecting the performance or quality of the work. If workers are no longer present but road or work conditions require the traffic control to remain in place, Type 3 Barricades or other channelizing devices may be substituted.
8. Additional Shadow Vehicles with TMAs may be positioned off the paved surface, next to those shown in order to protect a wider work space.

TCP (2-3a)

9. Conflicting pavement markings shall be removed for long-term projects. For shorter durations where traffic is directed over a yellow centerline, channelizing devices which separate two-way traffic should be spaced on tapers at 20' or 15' if posted speeds are 35 mph or slower, and for tangent sections, at 1/2(S) where S is the speed in mph. This tighter device spacing is intended for the area of the conflicting markings, not the entire work zone.

For construction or maintenance contract work, specific project requirements for shadow vehicles can be found in the project GENERAL NOTES for Item 502, Barricades, Signs and Traffic Handling.

Texas Department of Transportation
Traffic Operations Division

TRAFFIC CONTROL PLAN TRAFFIC SHIFTS ON TWO-LANE ROADS

TCP(2-3)-12

© TxDOT December 1985

DN: TXDOT	CK: TXDOT	DW: TXDOT	CK: TXDOT

REVISIONS
8-95 2-12
1-97
4-98
3-03

CONT	SECT	JOB	HIGHWAY
DIST	COUNTY		SHEET NO.
			23 OF 152

163

DATE:

DISCLAIMER: The use of this standard is governed by the "Texas Engineering Practice Act". No warranty of any kind is made by TxDOT for any purpose whatsoever. TxDOT assumes no responsibility for the conversion of this standard to other formats or for incorrect results or damages resulting from its use.

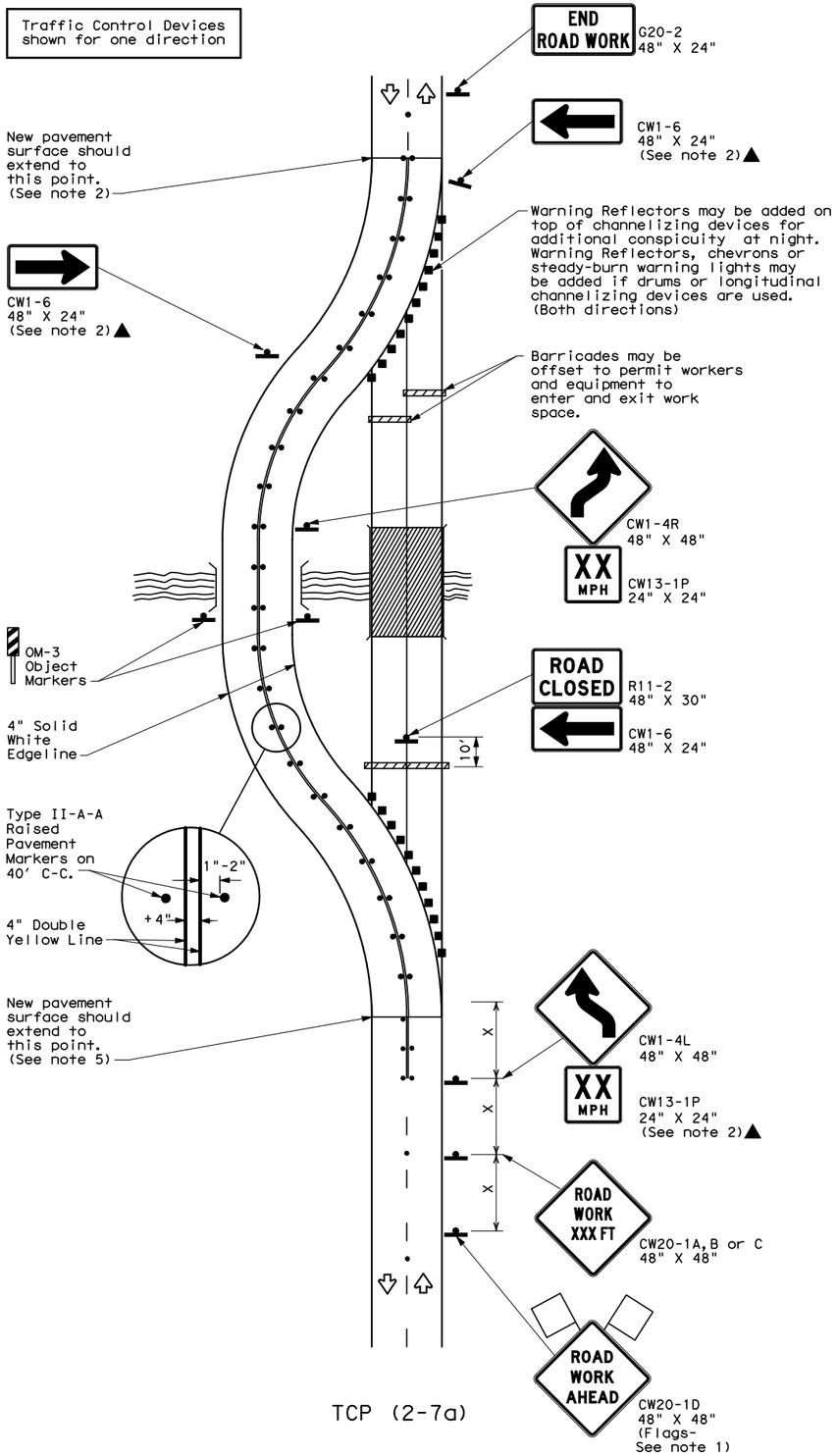

TCP (2-7a)

ROADWAY DIVERSION

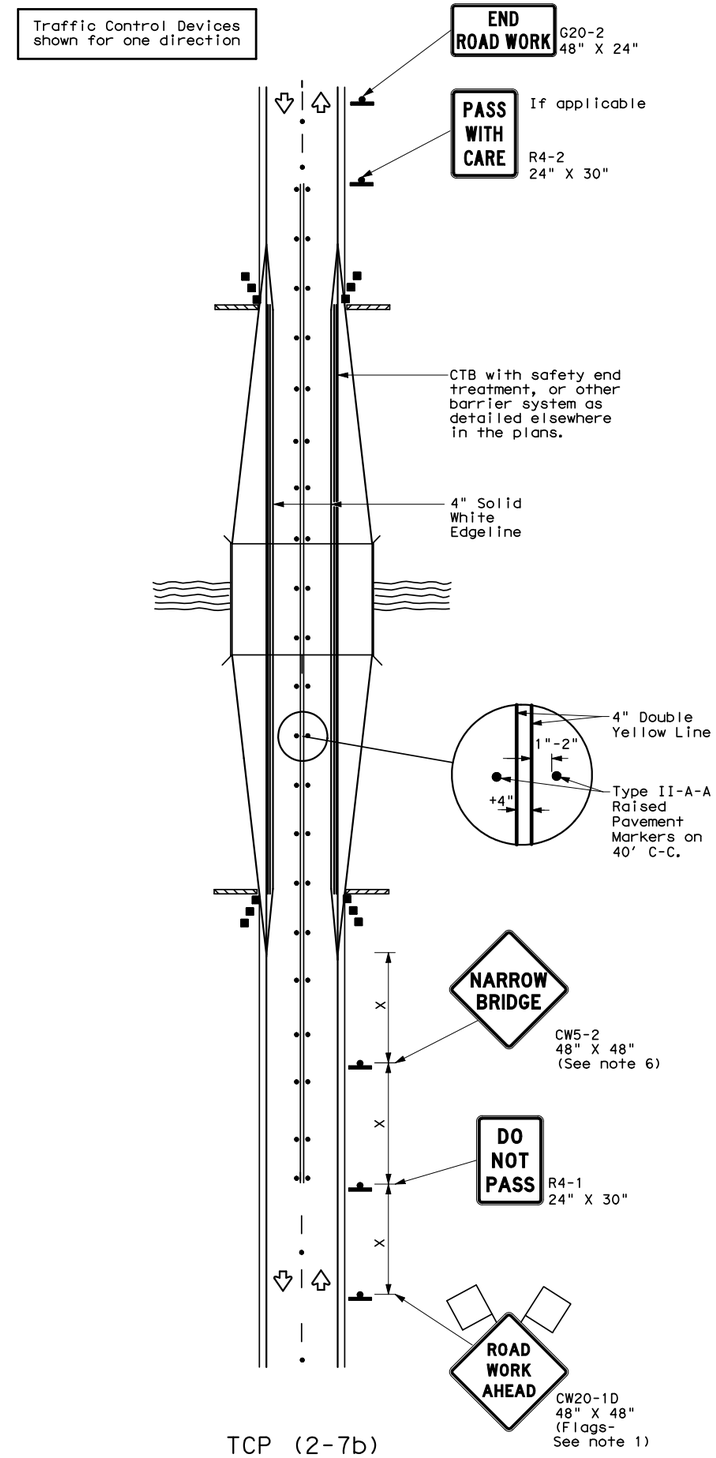

TCP (2-7b)

BRIDGE WIDENING

LEGEND			
	Type 3 Barricade		Channelizing Devices
	Heavy Work Vehicle		Truck Mounted Attenuator (TMA)
	Trailer Mounted Flashing Arrow Board		Raised Pavement Markers Ty II-AA
	Sign		Traffic Flow
	Flag		Flagger

Posted Speed ✳	Formula	Minimum Desirable Taper Lengths ✳✳			Suggested Maximum Spacing of Channelizing Devices		Minimum Sign Spacing "X" Distance	Suggested Longitudinal Buffer Space "B"
		10' Offset	11' Offset	12' Offset	On a Taper	On a Tangent		
30	$L=\frac{WS^2}{60}$	150'	165'	180'	30'	60'	120'	90'
35		205'	225'	245'	35'	70'	160'	120'
40		265'	295'	320'	40'	80'	240'	155'
45	L=WS	450'	495'	540'	45'	90'	320'	195'
50		500'	550'	600'	50'	100'	400'	240'
55		550'	605'	660'	55'	110'	500'	295'
60		600'	660'	720'	60'	120'	600'	350'
65		650'	715'	780'	65'	130'	700'	410'
70		700'	770'	840'	70'	140'	800'	475'
75		750'	825'	900'	75'	150'	900'	540'

✳ Conventional Roads Only

✳✳ Taper lengths have been rounded off.
L=Length of Taper(FT) W=Width of Offset(FT) S=Posted Speed(MPH)

TYPICAL USAGE				
MOBILE	SHORT DURATION	SHORT TERM STATIONARY	INTERMEDIATE TERM STATIONARY	LONG TERM STATIONARY
			✓	✓

GENERAL NOTES

1. Flags attached to signs where shown are REQUIRED.
2. All traffic control devices illustrated are REQUIRED, except those denoted with the triangle symbol may be omitted when stated elsewhere in the plans, or for routine maintenance work, when approved by the Engineer.

TCP (2-7a)

3. Raised pavement markers shall be placed 40 feet c-c on centerline throughout project.
4. Roadway diversion design requirements should be based on posted speed limit or prevailing speed.
5. New pavement surface should be extended across existing roadway edge to a point where existing pavement markings left in place during project do not conflict with construction area pavement marking.

TCP (2-7b)

6. The CW5-2 "Narrow Bridge" sign may be omitted if lane and shoulder widths are maintained.

For construction or maintenance contract work, specific project requirements for shadow vehicles can be found in the project GENERAL NOTES for Item 502, Barricades, Signs and Traffic Handling.

Texas Department of Transportation
Traffic Operations Division

TRAFFIC CONTROL PLAN DIVERSIONS AND NARROW BRIDGES

TCP(2-7)-12

© TxDOT December 1985

DN: TXDOT	CK: TXDOT	DW: TXDOT	CK: TXDOT

REVISIONS
8-95 2-12
1-97
4-98
3-03

CONT	SECT	JOB	HIGHWAY
DIST		COUNTY	SHEET NO.
			24 OF 152

DATE:
FILE:

DISCLAIMER: The use of this standard is governed by the "Texas Engineering Practice Act". No warranty of any kind is made by TxDOT for any purpose whatsoever. TxDOT assumes no responsibility for the conversion of this standard to other formats or for incorrect results or damages resulting from its use.

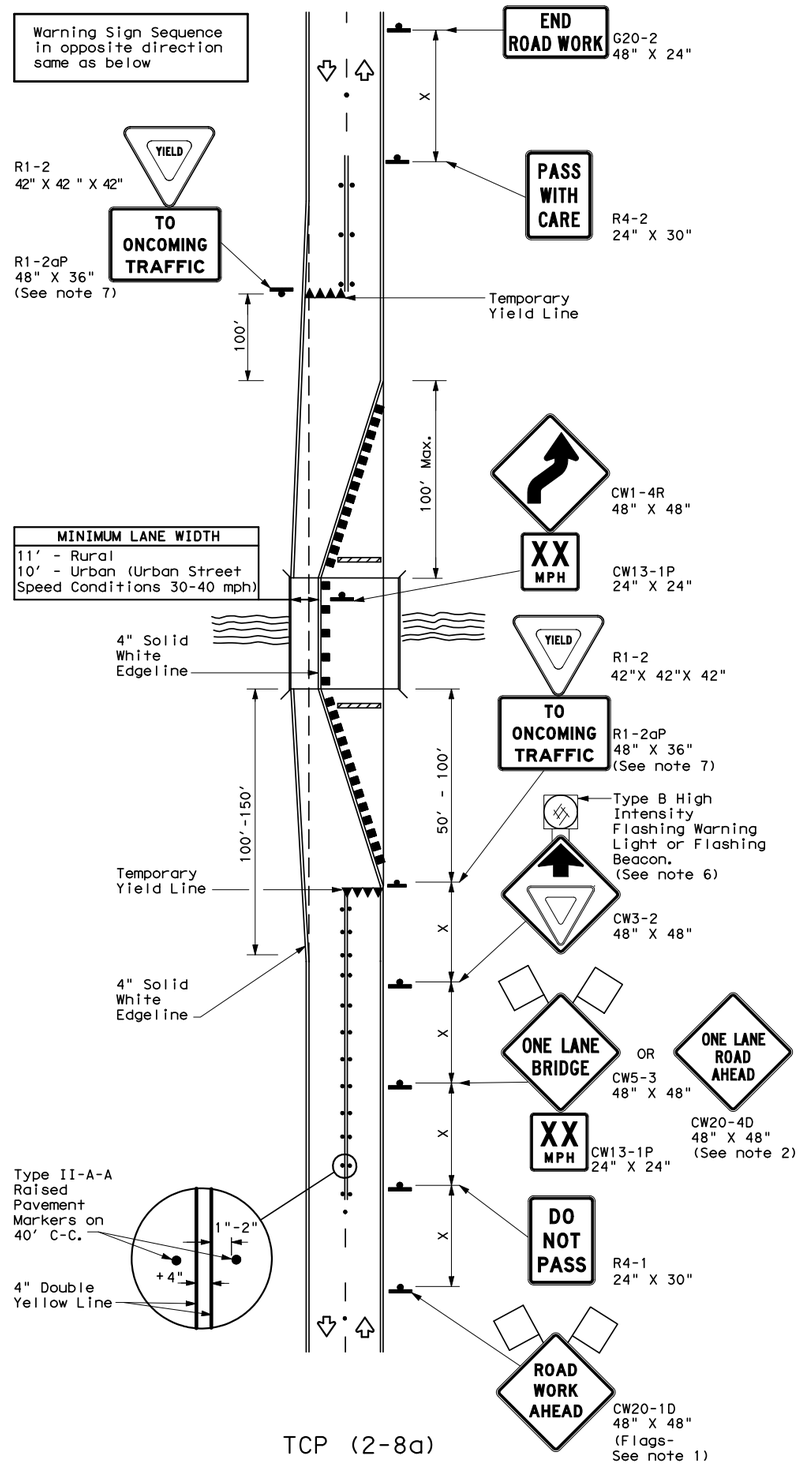

TCP (2-8a)

ONE LANE TWO-WAY
TRAFFIC CONTROL WITH YIELD SIGNS
(Less Than 2000 ADT-See Note 5)

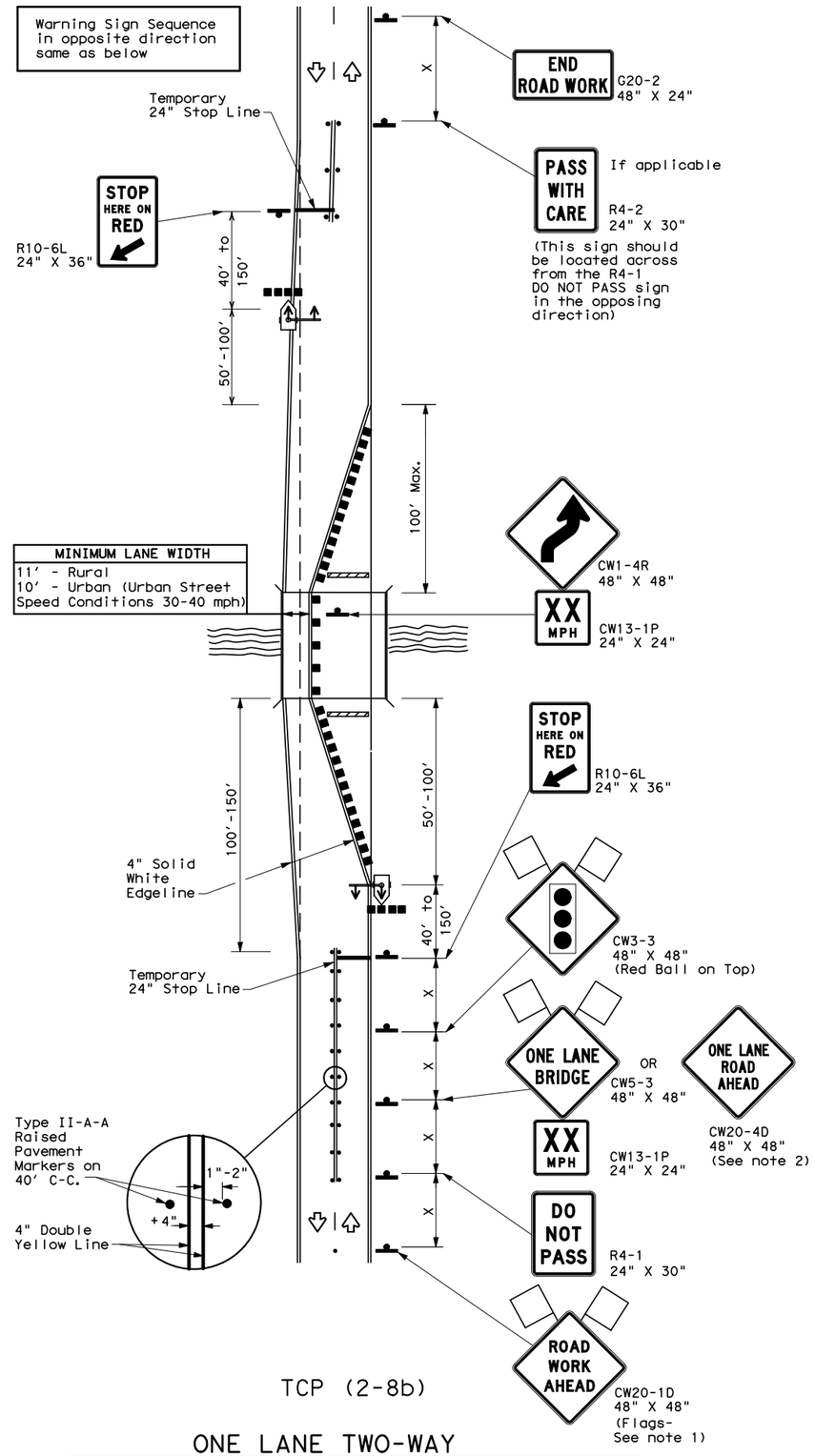

TCP (2-8b)

ONE LANE TWO-WAY
TRAFFIC CONTROL WITH TRAFFIC SIGNAL

LEGEND			
	Type 3 Barricade		Channelizing Devices
	Sign		Traffic Flow
	Flag		Flagger
	Raised Pavement Markers Ty II-AA		Temporary or Portable Traffic Signal

Posted Speed ✳	Formula	Minimum Desirable Taper Lengths ✳✳ 10' Offset	11' Offset	12' Offset	Suggested Maximum Spacing of Channelizing Devices On a Taper	On a Tangent	Minimum Sign Spacing "X" Distance	Suggested Longitudinal Buffer Space "B"	Stopping Sight Distance
30	$L=\frac{WS^2}{60}$	150'	165'	180'	30'	60'	120'	90'	200'
35		205'	225'	245'	35'	70'	160'	120'	250'
40		265'	295'	320'	40'	80'	240'	155'	305'
45	L=WS	450'	495'	540'	45'	90'	320'	195'	360'
50		500'	550'	600'	50'	100'	400'	240'	425'
55		550'	605'	660'	55'	110'	500'	295'	495'
60		600'	660'	720'	60'	120'	600'	350'	570'
65		650'	715'	780'	65'	130'	700'	410'	645'
70		700'	770'	840'	70'	140'	800'	475'	730'
75		750'	825'	900'	75'	150'	900'	540'	820'

✳ Conventional Roads Only
✳✳ Taper lengths have been rounded off.
L=Length of Taper(FT) W=Width of Offset(FT) S=Posted Speed(MPH)

TYPICAL USAGE				
MOBILE	SHORT DURATION	SHORT TERM STATIONARY	INTERMEDIATE TERM STATIONARY	LONG TERM STATIONARY
			✓	✓

GENERAL NOTES

1. Flags attached to signs where shown are REQUIRED.
2. When this TCP is used at a location which does not involve a bridge, a 48" x 48" CW20-4D "ONE LANE ROAD AHEAD" signs should be used in lieu of the CW5-3 "ONE LANE BRIDGE" signs. The CW13-1P Advisory Speed Plaque is required with either warning sign.
3. Raised pavement markers shall be placed 40 feet c-c on centerline between DO NOT PASS signs and stop or yield lines.
4. For intermediate term situations, when it is not feasible to remove and restore pavement markings, the channelization must be made dominant by using a very close spacing. This is especially important in locations of conflicting information, such as where traffic is directed over a double yellow centerline. In such locations a maximum channelizing device spacing of 20 feet is recommended. The 20 foot channelizing device spacing recommendation is intended for the area of conflicting information and not the entire work zone.

TCP (2-8a)

5. Traffic control by CW3-2 "YIELD AHEAD" symbol signs for one lane two-way traffic control operations should be limited to work spaces less than 400 feet long and roadways with less than 2000 ADT. Otherwise, portable traffic signals should be used.
6. If power is available, a flashing beacon should be attached to the CW3-2 "YIELD AHEAD" symbol sign for emphasis.
7. The R1-2 "YIELD" and R1-2aP "TO ONCOMING TRAFFIC" signs and other regulatory signs shall be installed at 7 foot minimum mounting height.

TCP (2-8b)

8. A list of approved Portable Traffic Signals can be found in the "Compliant Work Zone Traffic Control Devices" list.
9. Portable traffic signals should be located to provide adequate stopping sight distance for approaching motorist (See table above).

For construction or maintenance contract work, specific project requirements for shadow vehicles can be found in the project GENERAL NOTES for Item 502, Barricades, Signs and Traffic Handling.

Texas Department of Transportation
Traffic Operations Division

TRAFFIC CONTROL PLAN LONG TERM ONE-LANE TWO-WAY CONTROL

TCP(2-8)-12

©TxDOT December 1985

DN: TXDOT	CK: TXDOT	DW: TXDOT	CK: TXDOT
CONT	SECT	JOB	HIGHWAY
DIST		COUNTY	SHEET NO.
			25 OF 152

REVISIONS
8-95 2-12
1-97
4-98
3-03

DATE:
FILE:

DISCLAIMER:
The use of this standard is governed by the "Texas Engineering Practice Act". No warranty of any kind is made by TxDOT for any purpose whatsoever. TxDOT assumes no responsibility for the conversion of this standard to other formats or for incorrect results or damages resulting from its use.

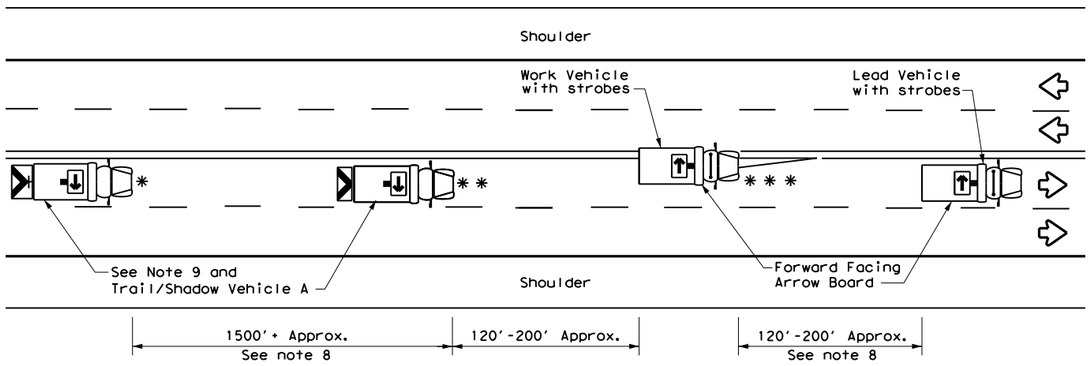

TCP (3-1a)

UNDIVIDED MULTILANE ROADWAY

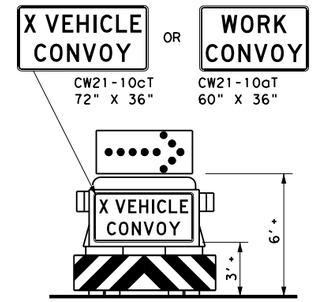

TRAIL/SHADOW VEHICLE A

with RIGHT Directional display Flashing Arrow Board

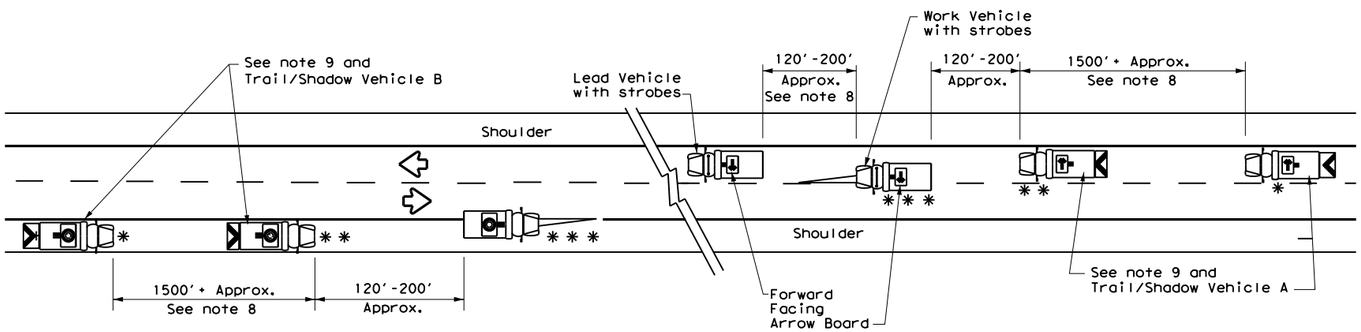

WORK ON SHOULDER

WORK ON TRAVEL LANE

TCP (3-1b)

TWO-WAY ROADWAY WITH PAVED SHOULDERS

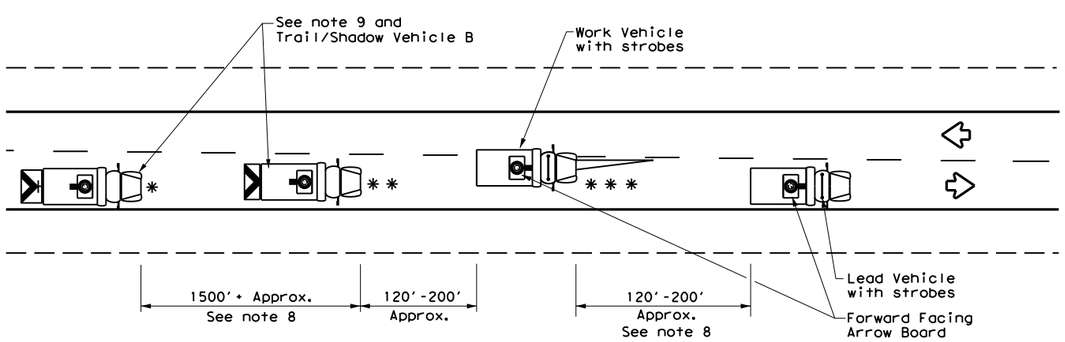

TCP (3-1c)

TWO-WAY ROADWAY WITHOUT PAVED SHOULDERS

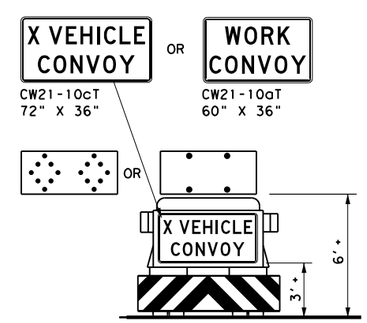

TRAIL/SHADOW VEHICLE B

with Flashing Arrow Board in CAUTION display

LEGEND			
*	Trail Vehicle	ARROW BOARD DISPLAY	
* *	Shadow Vehicle		
* * *	Work Vehicle		RIGHT Directional
	Heavy Work Vehicle		LEFT Directional
	Truck Mounted Attenuator (TMA)		Double Arrow
	Traffic Flow		CAUTION (Alternating Diamond or 4 Corner Flash)

TYPICAL USAGE				
MOBILE	SHORT DURATION	SHORT TERM STATIONARY	INTERMEDIATE TERM STATIONARY	LONG TERM STATIONARY
✓				

GENERAL NOTES

1. TRAIL, SHADOW, and LEAD vehicles shall be equipped with arrow boards as illustrated. When a LEAD vehicle is not used the WORK vehicle must be equipped with an arrow board. The Engineer will determine if the LEAD VEHICLE and/or TRAIL VEHICLE are required based on prevailing roadway conditions, traffic volume, and sight distance restrictions.
2. The use of amber high intensity rotating, flashing, oscillating, or strobe lights on vehicles are required. Blue high intensity rotating, flashing, oscillating or strobe lights when mounted on the driver's side of the vehicle may be operated simultaneously with the amber beacons or strobe lights.
3. The use of truck mounted attenuators (TMA) on the SHADOW VEHICLE and TRAIL VEHICLE are required.
4. Reflective sheeting on the rear of the TMA shall meet or exceed the reflectivity and color requirements of DEPARTMENTAL MATERIAL SPECIFICATION DMS 8300, Type A.
5. Flashing arrow boards shall be Type B or Type C as per the Barricade and Construction (BC) standards. The board shall be controlled from inside the vehicle.
6. Each vehicle shall have two-way radio communication capability.
7. When work convoys must change lanes, the TRAIL VEHICLE should change lanes first to shadow the other convoy vehicles.
8. Vehicle spacing between the TRAIL VEHICLE and the SHADOW VEHICLE will vary depending on sight distance restrictions. Motorists approaching the work convoy should be able to see the TRAIL VEHICLE in time to slow down and/or change lanes as they approach the TRAIL VEHICLE. Vehicle spacing between the WORK VEHICLE and SHADOW VEHICLE and vehicle spacing between WORK VEHICLE and LEAD VEHICLE may vary according to terrain, work activity and other factors.
9. "X VEHICLE CONVOY" (CW21-10cT) or "WORK CONVOY" (CW21-10aT) signs shall be used on TRAIL VEHICLES and SHADOW VEHICLES as shown. As an option 48" X 48" diamond shaped "WORK CONVOY"(CW21-10T) or "X VEHICLE CONVOY" (CW21-10bT) signs may be used where adequate mounting space exists. When used, the X VEHICLE CONVOY sign shall have the number of the convoy vehicles displayed on the sign in the number designation "X" location. The "X VEHICLE CONVOY" sign shall not be used on the SHADOW VEHICLE if a TRAIL VEHICLE is used.
10. On two-lane two-way roadways, the work and protection vehicles should pull over periodically to allow motor vehicle traffic to pass. If motorists are not allowed to pass the work convoy, a "DO NOT PASS" (R4-1) sign should be placed on the back of the rearmost protection vehicle.

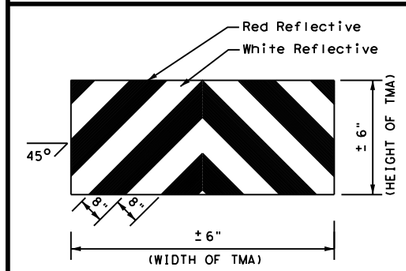

STRIPING FOR TMA

Texas Department of Transportation

Traffic Operations Division Standard

TRAFFIC CONTROL PLAN MOBILE OPERATIONS UNDIVIDED HIGHWAYS

TCP(3-1)-13

FILE: tcp3-1.dgn	DN: TxDOT	CK: TxDOT	DW: TxDOT	CK: TxDOT
© TxDOT December 1985	CONT	SECT	JOB	HIGHWAY
REVISIONS 2-94 4-98 8-95 7-13 1-97	DIST	COUNTY		SHEET NO. 26 OF 152

DATE:
FILE:

DISCLAIMER:
The use of this standard is governed by the "Texas Engineering Practice Act". No warranty of any kind is made by TxDOT for any purpose whatsoever. TxDOT assumes no responsibility for the conversion of this standard to other formats or for incorrect results or damages resulting from its use.

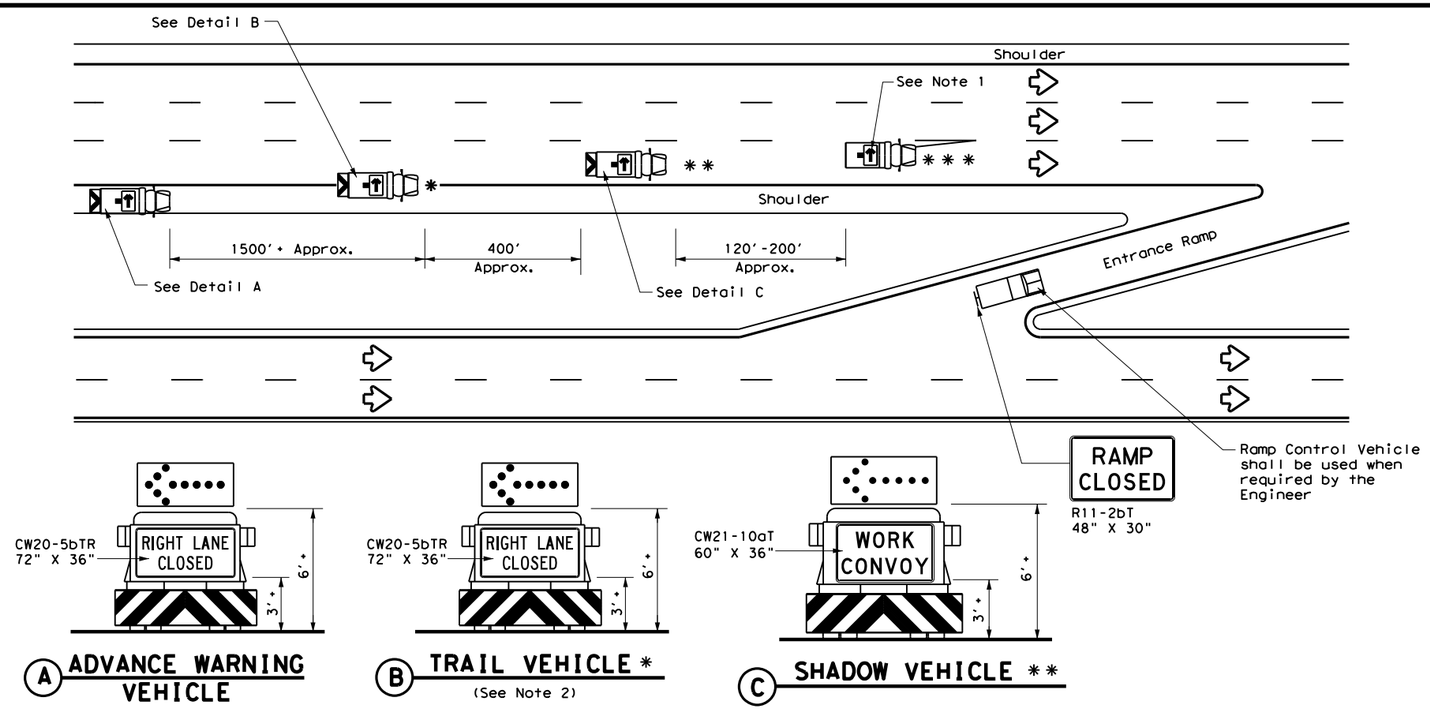

RIGHT LANE CLOSURE ON DIVIDED HIGHWAY - TCP(3-2a)

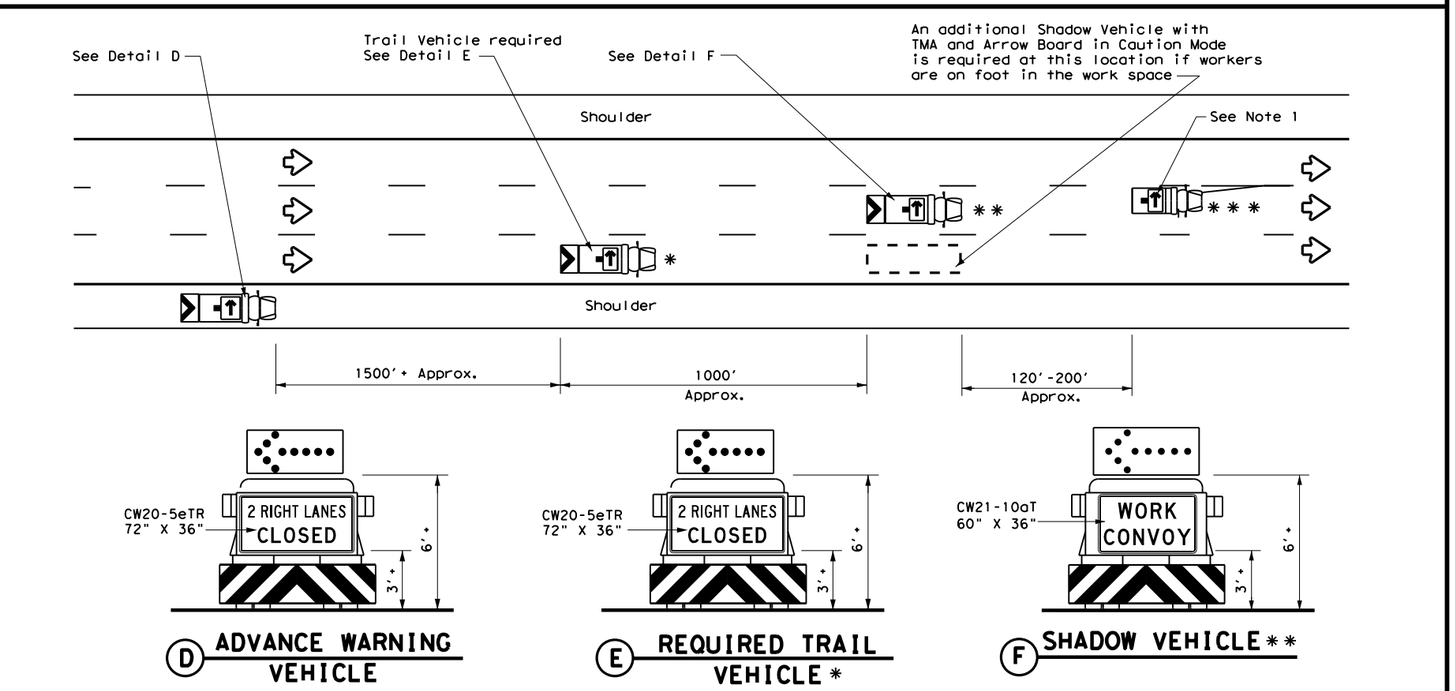

INTERIOR LANE CLOSURE ON MULTI-LANE DIVIDED HIGHWAY - TCP(3-2b)

LEGEND

*	Trail Vehicle	ARROW BOARD DISPLAY	
**	Shadow Vehicle		
***	Work Vehicle		RIGHT Directional
	Heavy Work Vehicle		LEFT Directional
	Truck Mounted Attenuator (TMA)		Double Arrow
	Traffic Flow		CAUTION (Alternating Diamond or 4 Corner Flash)

TYPICAL USAGE				
MOBILE	SHORT DURATION	SHORT TERM STATIONARY	INTERMEDIATE TERM STATIONARY	LONG TERM STATIONARY
✓				

GENERAL NOTES

1. ADVANCE WARNING, TRAIL and SHADOW vehicles shall be equipped with Type B or Type C flashing arrow boards as per the Barricade and Construction (BC) standards. Arrow boards on WORK vehicles will be optional based on the type of work being performed. The arrow boards shall be operated from inside the vehicle.
2. For TCP(3-2a) the Engineer will determine if the TRAIL VEHICLE is required based on prevailing roadway conditions, traffic volume, and sight distance restrictions. All other vehicles shown for both TCP(3-2a) and TCP(3-2b) are required.
3. The use of amber high intensity rotating, flashing, oscillating, or strobe lights on vehicles are required. Blue high intensity rotating, flashing, oscillating or strobe lights when mounted on the driver's side of the vehicle may be operated simultaneously with the amber beacons or strobe lights.
4. The use of truck mounted attenuators (TMA) on the ADVANCE WARNING, SHADOW, and TRAIL vehicles are required.
5. Reflective sheeting on the rear of the TMA shall meet or exceed the reflectivity and color requirements of DMS 8300, Type A.
6. Each vehicle shall have two-way radio communication capability.
7. When work convoys must change lanes, the TRAIL VEHICLE should change lanes first to shadow the other convoy vehicles.
8. Vehicle spacing between the TRAIL VEHICLE and the SHADOW VEHICLE will vary depending on sight distance restrictions. Motorists approaching the work convoy should be able to see the TRAIL VEHICLE in time to slow down and/or change lanes as they approach the TRAIL VEHICLE. Vehicle spacing between the WORK VEHICLE and SHADOW VEHICLE may vary according to terrain, work activity and other factors.
9. Standard 48" X 48" diamond shaped warning signs with the same message as those shown may be used where adequate mounting space exists.
10. The signs shown should be used on the Advance Warning Vehicle. As an option, a portable changeable message sign (PCMS) or a truck mounted changeable message sign (TMCMS) with a minimum character height of 12", and displaying the same legend may be substituted for these signs. An appropriate directional arrow display, simulating the size and legibility of the flashing arrow board, must be used in the second phase of the PCMS/TMCMS message. When this is done, the arrow board will not be required on the Advance Warning Vehicle.
11. Standard diamond shape versions of the CW20-5 series signs may be used as an option if the rectangular signs shown are not available.
12. The principles on this sheet may be used to close lanes from the left side of the roadway considering the number of lanes, shoulder width, sight distance, and ramp frequency.
13. Signs and flashing arrow board modes shall be appropriately altered when implementing left lane closures or interior closures which close the left lanes.
14. The Advance Warning Vehicle may straddle the edgeline when shoulder width makes it necessary.

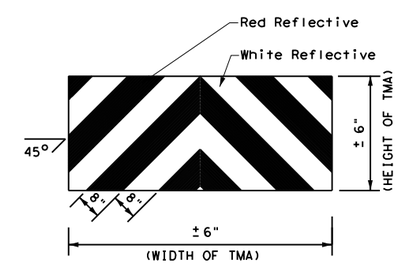

STRIPING FOR TMA

Texas Department of Transportation — Traffic Operations Division Standard

TRAFFIC CONTROL PLAN MOBILE OPERATIONS DIVIDED HIGHWAYS

TCP(3-2)-13

FILE: tcp3-2.dgn	DN: TxDOT	CK: TxDOT	DW: TxDOT	CK: TxDOT
© TxDOT December 1985	CONT	SECT	JOB	HIGHWAY
REVISIONS 2-94 4-98 8-95 7-13 1-97	DIST		COUNTY	SHEET NO. 27 OF 152

DATE:
FILE:

176

DISCLAIMER:
The use of this standard is governed by the "Texas Engineering Practice Act". No warranty of any kind is made by TxDOT for any purpose whatsoever. TxDOT assumes no responsibility for the conversion of this standard to other formats or for incorrect results or damages resulting from its use.

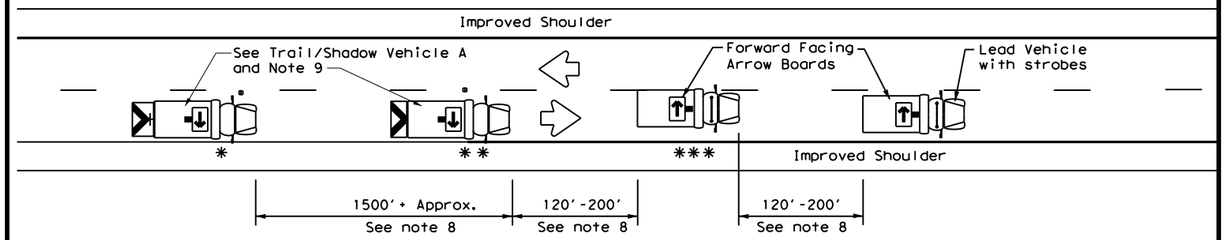

TCP (3-3a)

TWO LANE HIGHWAY WITH PAVED SHOULDERS (WORK ON TRAVEL LANE)

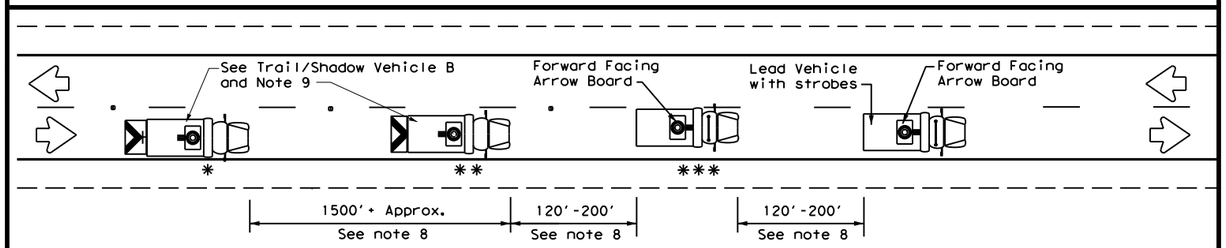

TCP (3-3b)

TWO LANE HIGHWAY WITHOUT PAVED SHOULDERS (WORK ON TRAVEL LANE)

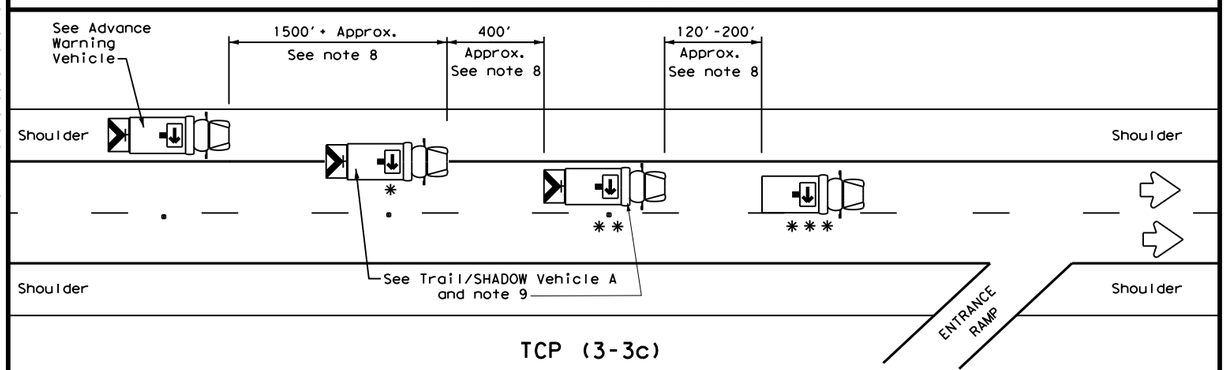

TCP (3-3c)

DIVIDED MULTILANE HIGHWAY

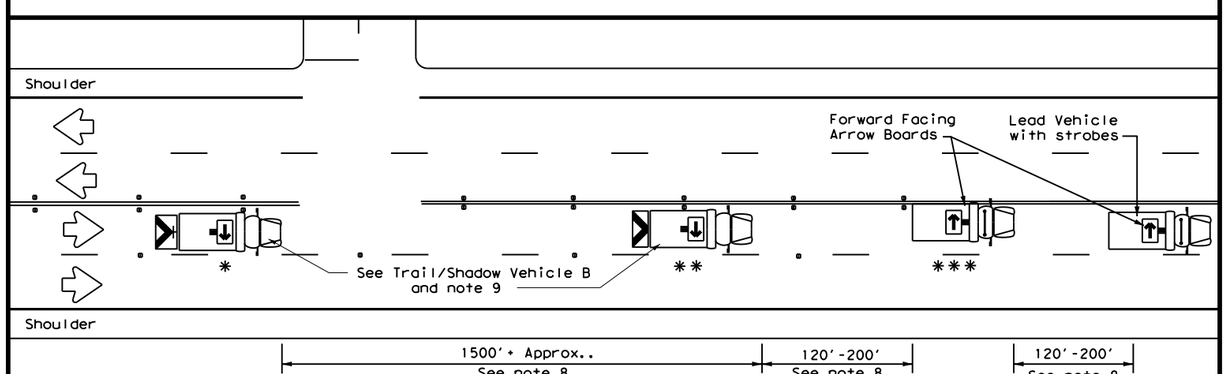

TCP (3-3d)

UNDIVIDED MULTILANE HIGHWAY

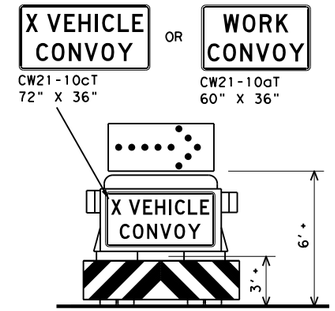

TRAIL/SHADOW VEHICLE A

with RIGHT Directional display
Flashing Arrow Board

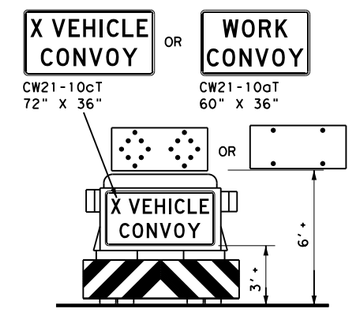

TRAIL/SHADOW VEHICLE B

with Flashing Arrow Board
in Caution Mode

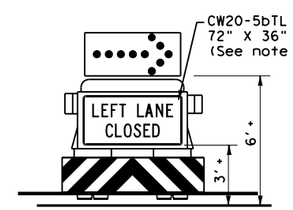

ADVANCE WARNING VEHICLE

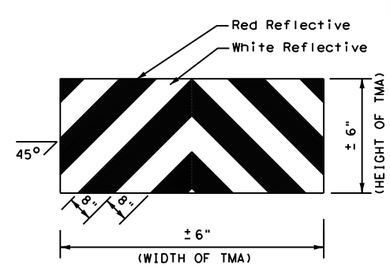

STRIPING FOR TMA

LEGEND			
*	Trail Vehicle	ARROW BOARD DISPLAY	
**	Shadow Vehicle		
***	Work Vehicle		RIGHT Directional
	Heavy Work Vehicle		LEFT Directional
	Truck Mounted Attenuator (TMA)		Double Arrow
	Traffic Flow		CAUTION (Alternating Diamond or 4 Corner Flash)

TYPICAL USAGE				
MOBILE	SHORT DURATION	SHORT TERM STATIONARY	INTERMEDIATE TERM STATIONARY	LONG TERM STATIONARY
✓				

GENERAL NOTES

1. TRAIL, SHADOW, and LEAD vehicles shall be equipped with arrow boards as illustrated. When a LEAD vehicle is not used on two way roads the WORK vehicle must have an arrow board. For divided roadways, the arrow board on the WORK vehicle is optional based on the type of work being performed. The Engineer will determine if the LEAD vehicle and/or TRAIL vehicle are required based on prevailing roadway conditions, traffic volume, and sight distance restrictions.
2. The use of amber high intensity rotating, flashing, oscillating, or strobe lights on vehicles are required. Blue high intensity rotating, flashing, oscillating, or strobe lights when mounted on the driver's side of the vehicle may be operated simultaneously with the amber beacons or strobe lights.
3. The use of truck mounted attenuators (TMA) on the SHADOW VEHICLE, ADVANCE WARNING and TRAIL VEHICLE are required.
4. Reflective sheeting on the rear of the TMA shall meet or exceed the reflectivity and color requirements of DEPARTMENTAL MATERIAL SPECIFICATION DMS 8300, Type A.
5. Flashing arrow boards shall be Type B or Type C as per the Barricade and Construction (BC) standards. The board shall be controlled from inside the vehicle.
6. Each vehicle shall have two-way radio communication capability.
7. When work convoys must change lanes, the TRAIL VEHICLE should change lanes first to shadow the other convoy vehicles.
8. Vehicle spacing between the TRAIL VEHICLE and the SHADOW VEHICLE will vary depending on sight distance restrictions. Motorists approaching the convoy should be able to see the TRAIL VEHICLE in time to slow down and/or change lanes as they approach the TRAIL VEHICLE. Vehicle spacing between the WORK VEHICLE and SHADOW VEHICLE and vehicle spacing between WORK VEHICLE and LEAD VEHICLE may vary according to terrain, work activity and other factors.
9. X VEHICLE CONVOY (CW21-10cT) or WORK CONVOY (CW21-10aT) signs shall be used on TRAIL VEHICLES and SHADOW VEHICLES as shown. As an option 48" x 48" diamond shaped WORK CONVOY (CW21-10T) or X VEHICLE CONVOY (CW21-10bT) signs may be used where adequate mounting space exists. When used, the X VEHICLE CONVOY sign shall have the number of the convoy vehicles displayed on the sign in the number designation "X" location. The X VEHICLE CONVOY sign shall not be used on the SHADOW VEHICLE if a TRAIL VEHICLE is used.
10. For divided highways with two or three lanes in one direction, the appropriate LEFT LANE CLOSED (CW20-5bTL), RIGHT LANE CLOSED (CW20-5bTR), or CENTER LANE CLOSED (CW20-5dT) sign should be used on the Advance Warning Vehicle. As an option, a portable changeable message sign (PCMS) or truck mounted changeable message sign (TMCMS) with a minimum character height of 12", and displaying the same legend may be substituted for these signs. An appropriate directional arrow display, simulating the size and legibility of the flashing arrow board may be used in the second phase of the PCMS/TMCMS message. When this is done, the arrow board will not be required on the Advance Warning Vehicle.
11. A double arrow shall not be displayed on the arrow board on the Advance Warning Vehicle.
12. For divided highways with three or four lanes in each direction, use TCP(3-2).
13. Standard diamond shape versions of the CW20-5 series signs may be used as an option if the rectangular signs shown are not available.
14. The Advance Warning Vehicle may straddle the edgeline when Shoulder width makes it necessary.
15. On two-lane two-way roadways, the work and protection vehicles should pull over periodically to allow motor vehicle traffic to pass. If motorists are not allowed to pass the work convoy, a DO NOT PASS (R4-1) sign should be placed on the back of the rearmost protection vehicle.

Texas Department of Transportation

Traffic Operations Division Standard

TRAFFIC CONTROL PLAN MOBILE OPERATIONS RAISED PAVEMENT MARKER INSTALLATION/ REMOVAL

TCP(3-3)-14

FILE: tcp3-3.dgn	DN: TxDOT	CK: TxDOT	DW: TxDOT	CK: TxDOT
© TxDOT September 1987	CONT	SECT	JOB	HIGHWAY
REVISIONS 2-94 4-98 8-95 7-13 1-97 7-14	DIST	COUNTY		SHEET NO. 28 OF 152

DATE:
FILE:

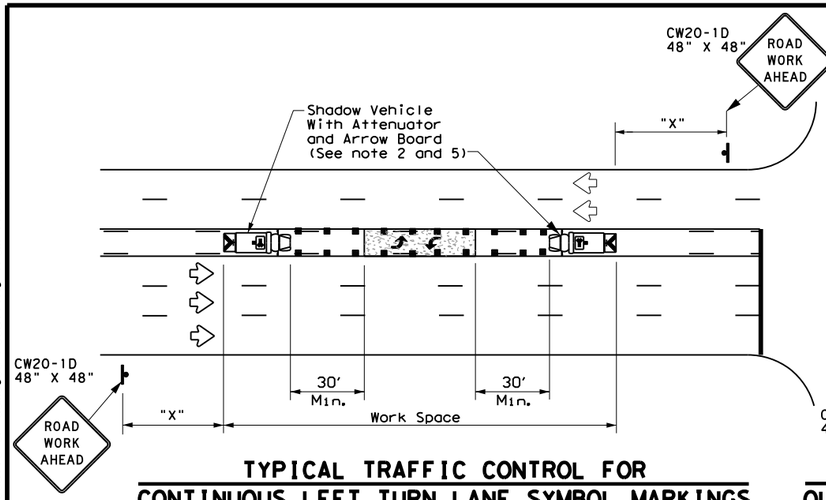

TYPICAL TRAFFIC CONTROL FOR CONTINUOUS LEFT TURN LANE SYMBOL MARKINGS

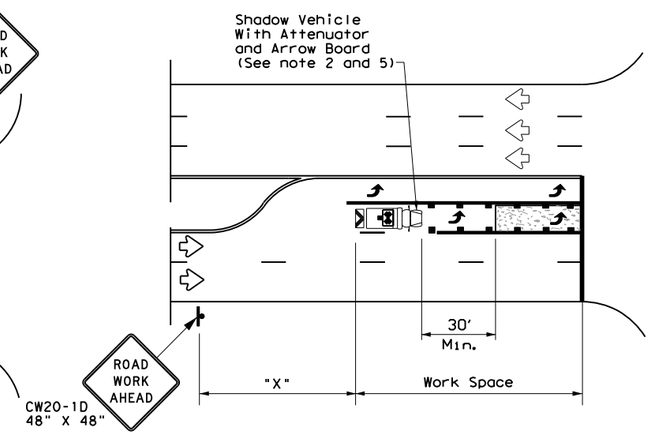

TYPICAL TRAFFIC CONTROL FOR OUTSIDE DUAL LEFT TURN LANE SYMBOL MARKINGS

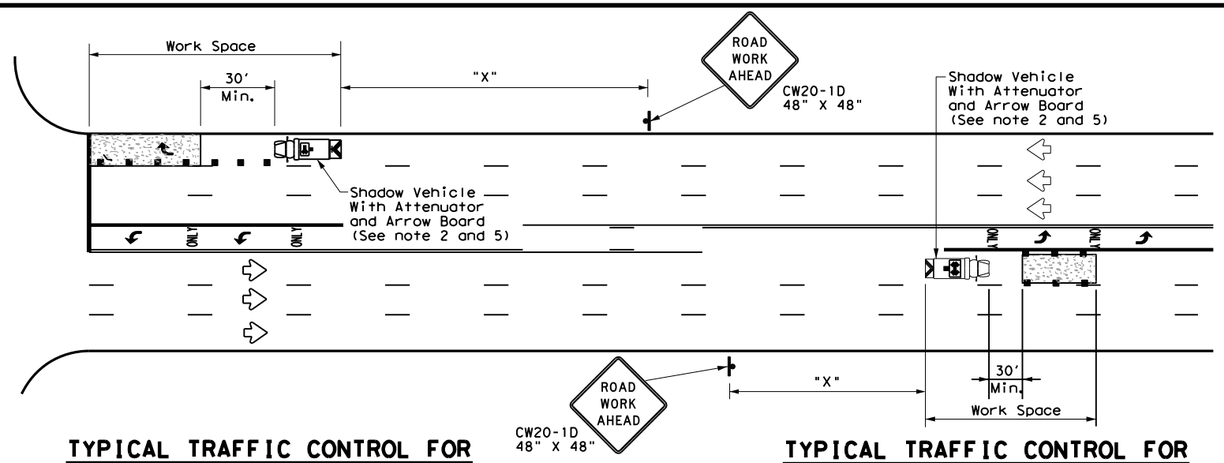

TYPICAL TRAFFIC CONTROL FOR OUTSIDE LANE MARKINGS

TYPICAL TRAFFIC CONTROL FOR INSIDE LANE MARKINGS

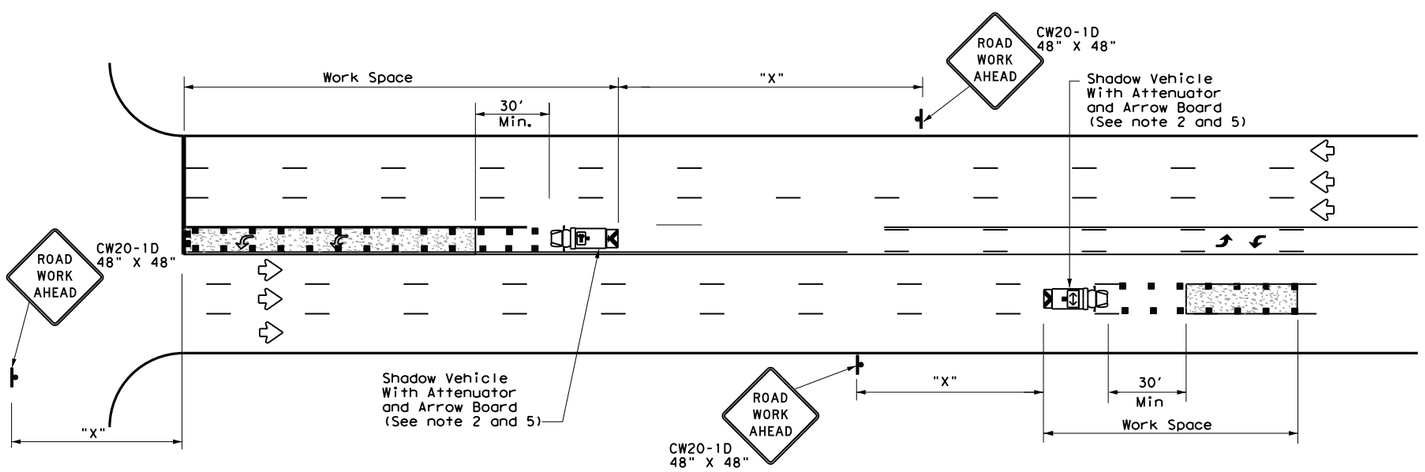

TYPICAL TRAFFIC CONTROL FOR LEFT TURN LANE MARKINGS

TYPICAL TRAFFIC CONTROL FOR CENTER LANE MARKINGS

LEGEND

*	Trail Vehicle	ARROW BOARD DISPLAY	
* *	Shadow Vehicle		
* * *	Work Vehicle		RIGHT Directional
	Heavy Work Vehicle		LEFT Directional
	Truck Mounted Attenuator (TMA)		Double Arrow
	Traffic Flow		Channelizing Devices

Posted Speed *	Formula	Minimum Desirable Taper Lengths **			Suggested Maximum Spacing of Channelizing Devices		Minimum Sign Spacing "X" Distance	Suggested Longitudinal Buffer Space "B"
		10' Offset	11' Offset	12' Offset	On a Taper	On a Tangent		
30	$L = \frac{WS^2}{60}$	150'	165'	180'	30'	60'	120'	90'
35		205'	225'	245'	35'	70'	160'	120'
40		265'	295'	320'	40'	80'	240'	155'
45	L = WS	450'	495'	540'	45'	90'	320'	195'
50		500'	550'	600'	50'	100'	400'	240'
55		550'	605'	660'	55'	110'	500'	295'
60		600'	660'	720'	60'	120'	600'	350'
65		650'	715'	780'	65'	130'	700'	410'
70		700'	770'	840'	70'	140'	800'	475'
75		750'	825'	900'	75'	150'	900'	540'

* Conventional Roads Only

** Taper lengths have been rounded off.
L=Length of Taper(FT) W=Width of Offset(FT) S=Posted Speed(MPH)

TYPICAL USAGE				
MOBILE	SHORT DURATION	SHORT TERM STATIONARY	INTERMEDIATE TERM STATIONARY	LONG TERM STATIONARY
✓				

GENERAL NOTES

1. This traffic control plan is for use on conventional roads posted at 45 mph or less and is intended for mobile operations that move continuously or intermittently (stopping up to approximately 15 minutes) such as short-line striping and in-lane rumble strips. When activities are anticipated to take longer amounts of time or traffic conditions warrant, a short duration or short-term stationary traffic control plan should be used.

2. A Truck Mounted Attenuator shall be used on Shadow Vehicle. Striping on the back panel of all truck mounted attenuators shall be 8" red and white reflective sheeting placed in an inverted "V" design. Reflective sheeting shall meet or exceed the reflectivity and color requirements of departmental material specification DMS-8300, Type A.

3. All traffic control devices shall be in accordance with the "Texas Manual on Uniform Traffic Control Devices" (TMUTCD), latest edition.

4. The use of yellow rotating beacons or strobe lights on vehicles are required. Blue high intensity rotating, flashing, oscillating or strobe lights when mounted on the drivers side of the vehicle may be operated simultaneously with the amber beacons or strobe lights.

5. Flashing arrow board shall be used on Shadow Vehicle. Flashing arrow board shall be Type B or Type C as per BC Standards. The arrow board operation shall be controlled from inside the truck.

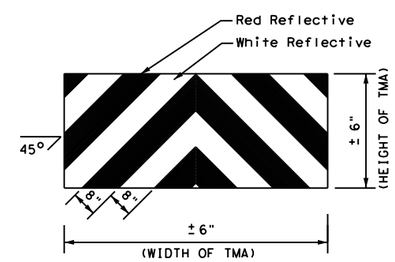

STRIPING FOR TMA

Texas Department of Transportation

Traffic Operations Division Standard

TRAFFIC CONTROL PLAN MOBILE OPERATIONS FOR ISOLATED WORK AREAS UNDIVIDED HIGHWAYS

TCP(3-4)-13

FILE: tcp3-4.dgn	DN: TxDOT	CK: TxDOT	DW: TxDOT	CK: TxDOT
© TxDOT July, 2013	CONT	SECT	JOB	HIGHWAY
REVISIONS	DIST		COUNTY	SHEET NO.
				29 OF 152

DISCLAIMER:
The use of this standard is governed by the "Texas Engineering Practice Act". No warranty of any kind is made by TxDOT for any purpose whatsoever. TxDOT assumes no responsibility for the conversion of this standard to other formats or for incorrect results or damages resulting from its use.

DATE:
FILE:

DISCLAIMER:
The use of this standard is governed by the "Texas Engineering Practice Act". No warranty of any kind is made by TxDOT for any purpose whatsoever. TxDOT assumes no responsibility for the conversion of this standard to other formats or for incorrect results or damages resulting from its use.

BARRICADE AND CONSTRUCTION (BC) STANDARD SHEETS GENERAL NOTES:

1. The Barricade and Construction Standard Sheets (BC sheets) are intended to show typical examples for placement of temporary traffic control devices, construction pavement markings, and typical work zone signs. The information contained in these sheets meet or exceed the requirements shown in the "Texas Manual on Uniform Traffic Control Devices" (TMUTCD).

2. The development and design of the Traffic Control Plan (TCP) is the responsibility of the Engineer.

3. The Contractor may propose changes to the TCP that are signed and sealed by a licensed professional engineer for approval. The Engineer may develop, sign and seal Contractor proposed changes.

4. The Contractor is responsible for installing and maintaining the traffic control devices as shown in the plans. The Contractor may not move or change the approximate location of any device without the approval of the Engineer.

5. Geometric design of lane shifts and detours should, when possible, meet the applicable design criteria contained in manuals such as the American Association of State Highway and Transportation Officials (AASHTO), "A Policy on Geometric Design of Highways and Streets," the TxDOT "Roadway Design Manual" or engineering judgment.

6. When projects abut, the Engineer(s) may omit the END ROAD WORK, TRAFFIC FINES DOUBLE, and other advance warning signs if the signing would be redundant and the work areas appear continuous to the motorists. If the adjacent project is completed first, the Contractor shall erect the necessary warning signs as shown on these sheets, the TCP sheets or as directed by the Engineer. The BEGIN ROAD WORK NEXT X MILES sign shall be revised to show appropriate work zone distance.

7. The Engineer may require duplicate warning signs on the median side of divided highways where median width will permit and traffic volumes justify the signing.

8. All signs shall be constructed in accordance with the details found in the "Standard Highway Sign Designs for Texas," latest edition. Sign details not shown in this manual shall be shown in the plans or the Engineer shall provide a detail to the Contractor before the sign is manufactured.

9. The temporary traffic control devices shown in the illustrations of the BC sheets are examples. As necessary, the Engineer will determine the most appropriate traffic control devices to be used.

10. As shown on BC(2), the OBEY WARNING SIGNS STATE LAW sign, STAY ALERT TALK OR TEXT LATER (see Sign Detail G20-10T) and the WORK ZONE TRAFFIC FINES DOUBLE sign with plaque shall be erected in advance of the CSJ limits. However, the TRAFFIC FINES DOUBLE sign will not be required on projects consisting solely of mobile operation work, such as striping or milling edgeline rumble strips. The BEGIN ROAD WORK NEXT X MILES, CONTRACTOR and END ROAD WORK signs shall be erected at or near the CSJ limits.

11. Except for devices required by Note 10, traffic control devices should be in place only while work is actually in progress or a definite need exists.

12. The Engineer has the final decision on the location of all traffic control devices.

13. Inactive equipment and work vehicles, including workers' private vehicles must be parked away from travel lanes. They should be as close to the right-of-way line as possible, or located behind a barrier or guardrail, or as approved by the Engineer.

WORKER SAFETY APPAREL NOTES:

1. Workers on foot who are exposed to traffic or to construction equipment within the right-of-way shall wear high-visibility safety apparel meeting the requirements of ISEA "American National Standard for High-Visibility Apparel," or equivalent revisions, and labeled as ANSI 107-2004 standard performance for Class 2 or 3 risk exposure. Class 3 garments should be considered for high traffic volume work areas or night time work.

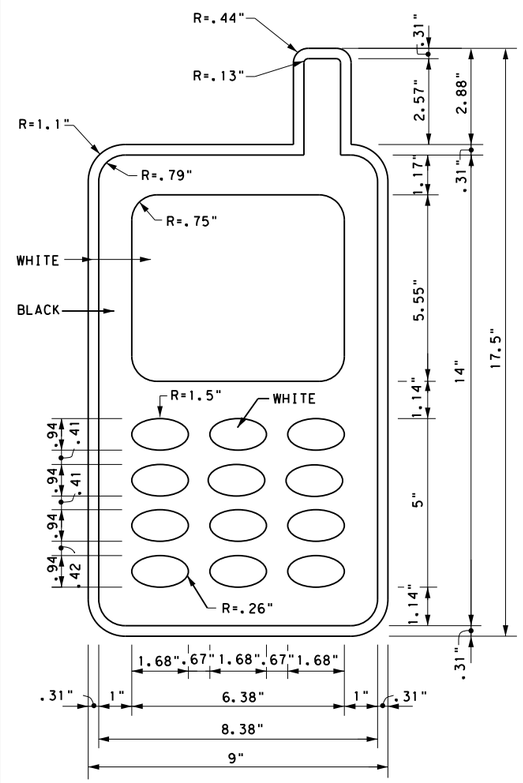

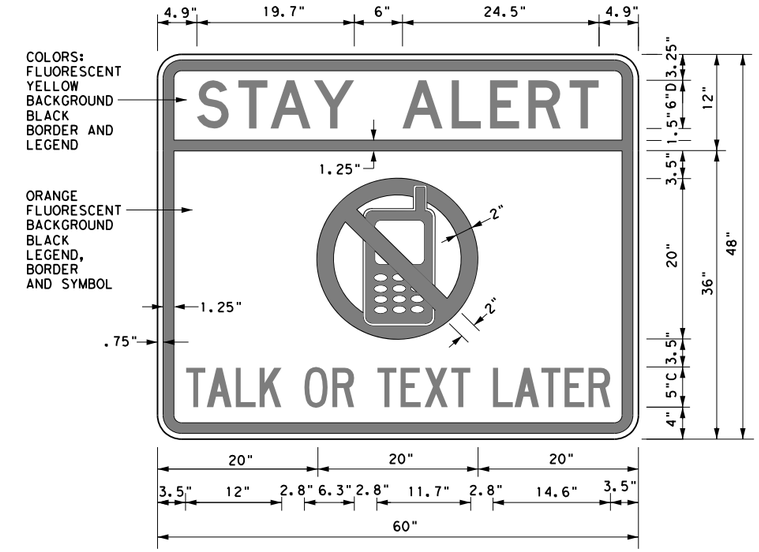

3.0" Radius, 1.25" Border, 0.75" Indent, Black on Yellow;
[STAY ALERT] Font: D
3.0" Radius, 1.25" Border, 0.75" Indent, Black on Orange;
[TALK OR TEXT LATER] Font: C specified length;

SIGN DETAIL (G20-10T)

Only pre-qualified products shall be used. The "Compliant Work Zone Traffic Control Devices List" (CWZTCD) describes pre-qualified products and their sources and may be found on-line at the web address given below or by contacting:

Texas Department of Transportation
Traffic Operations Division - TE
Phone (512) 416-3118

THE DOCUMENTS BELOW CAN BE FOUND ON-LINE AT http://www.txdot.gov
COMPLIANT WORK ZONE TRAFFIC CONTROL DEVICES LIST (CWZTCD)
DEPARTMENTAL MATERIAL SPECIFICATIONS (DMS)
MATERIAL PRODUCER LIST (MPL)
ROADWAY DESIGN MANUAL - SEE "MANUALS (ONLINE MANUALS)"
STANDARD HIGHWAY SIGN DESIGNS FOR TEXAS (SHSD)
TEXAS MANUAL ON UNIFORM TRAFFIC CONTROL DEVICES (TMUTCD)
TRAFFIC ENGINEERING STANDARD SHEETS

Texas Department of Transportation — Traffic Operations Division Standard

BARRICADE AND CONSTRUCTION GENERAL NOTES AND REQUIREMENTS

BC(1)-14

FILE: bc-14.dgn	DN: TxDOT	CK: TxDOT	DW: TxDOT	CK: TxDOT
© TxDOT November 2002	CONT	SECT	JOB	HIGHWAY
REVISIONS 4-03 5-10 8-14 9-07 7-13	DIST		COUNTY	SHEET NO. 30 OF 152

DATE:
FILE:

DISCLAIMER:
The use of this standard is governed by the "Texas Engineering Practice Act". No warranty of any kind is made by TxDOT for any purpose whatsoever. TxDOT assumes no responsibility for the conversion of this standard to other formats or for incorrect results or damages resulting from its use.

TYPICAL LOCATION OF CROSSROAD SIGNS

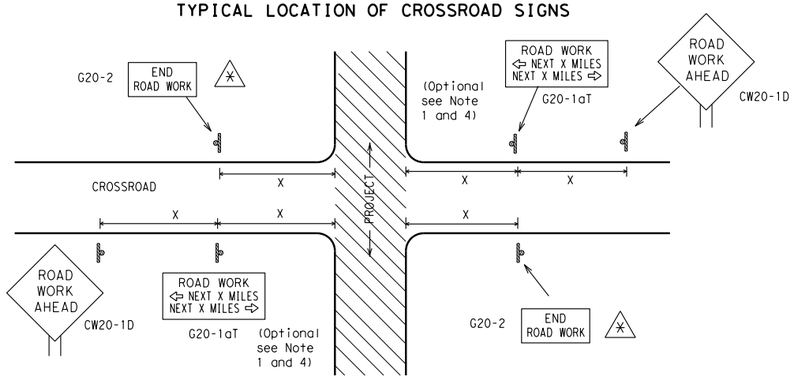

✱ May be mounted on back of "ROAD WORK AHEAD"(CW20-1D) sign with approval of Engineer. (See note 2 below)

1. The typical minimum signing on a crossroad approach should be a "ROAD WORK AHEAD" (CW20-1D)sign and a (G20-2) "END ROAD WORK" sign, unless noted otherwise in plans.
2. The Engineer may use the reduced size 36" x 36" ROAD WORK AHEAD (CW20-1D) sign mounted back to back with the reduced size 36" x 18" "END ROAD WORK"(G20-2) sign on low volume crossroads (see Note 4 under "Typical Construction Warning Sign Size and Spacing"). See the "Standard Highway Sign Designs for Texas" manual for sign details. The Engineer may omit the advance warning signs on low volume crossroads. The Engineer will determine whether a road is low volume. This information shall be shown in the plans.
3. Based on existing field conditions, the Engineer/Inspector may require additional signs such as FLAGGER AHEAD, LOOSE GRAVEL, or other appropriate signs. When additional signs are required, these signs will be considered part of the minimum requirements. The Engineer/Inspector will determine the proper location and spacing of any sign not shown on the BC sheets, Traffic Control Plan sheets or the Work Zone Standard Sheets.
4. The "ROAD WORK NEXT X MILES"(G20-1aT)sign shall be required at high volume crossroads to advise motorists of the length of construction in either direction from the intersection. The Engineer will determine whether a roadway is considered high volume.
5. Additional traffic control devices may be shown elsewhere in the plans for higher volume crossroads.
6. When work occurs in the intersection area, appropriate traffic control devices, as shown elsewhere in the plans or as determined by the Engineer/Inspector, shall be in place.

T-INTERSECTION

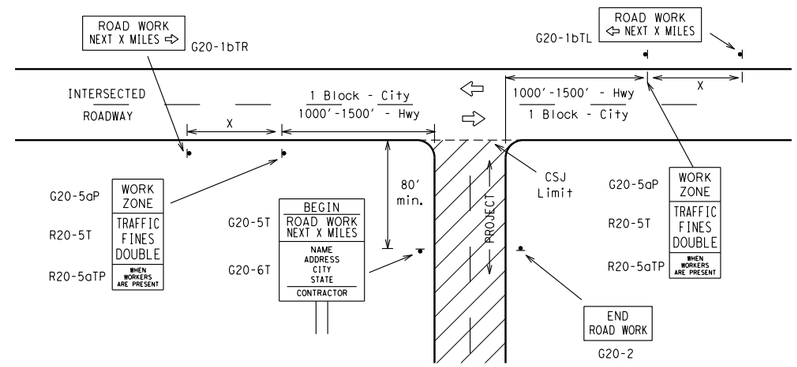

CSJ LIMITS AT T-INTERSECTION

1. The Engineer will determine the types and location of any additional traffic control devices, such as a flagger and accompanying signs, or other signs, that should be used when work is being performed at or near an intersection.
2. If construction closes the road at a T-intersection the Contractor shall place the "CONTRACTOR NAME"(G20-6T) sign behind the Type 3 Barricades for the road closure (see BC(10) also). The "ROAD WORK NEXT X MILES" left arrow(G20-1bTL) and "ROAD WORK NEXT X MILES" right arrow (G20-1bTR)" signs shall be replaced by the detour signing called for in the plans.

TYPICAL CONSTRUCTION WARNING SIGN SIZE AND SPACING[1,5,6]

SIZE

Sign Number or Series	Conventional Road	Expressway/ Freeway
CW20[4] CW21 CW22 CW23 CW25	48" x 48"	48" x 48"
CW1, CW2, CW7, CW8, CW9, CW11, CW14	36" x 36"	48" x 48"
CW3, CW4, CW5, CW6, CW8-3, CW10, CW12	48" x 48"	48" x 48"

SPACING

Posted Speed	Sign Spacing "X" △
MPH	Feet (Apprx.)
30	120
35	160
40	240
45	320
50	400
55	500[2]
60	600[2]
65	700[2]
70	800[2]
75	900[2]
80	1000[2]
✱	✱[3]

✱ For typical sign spacings on divided highways, expressways and freeways, see Part 6 of the "Texas Manual on Uniform Traffic Control Devices" (TMUTCD) typical application diagrams or TCP Standard Sheets.

△ Minimum distance from work area to first Advance Warning sign nearest the work area and/or distance between each additional sign.

GENERAL NOTES

1. Special or larger size signs may be used as necessary.
2. Distance between signs should be increased as required to have 1500 feet advance warning.
3. Distance between signs should be increased as required to have 1/2 mile or more advance warning.
4. 36" x 36" "ROAD WORK AHEAD" (CW20-1D)signs may be used on low volume crossroads at the discretion of the Engineer. See Note 2 under "Typical Location of Crossroad Signs".
5. Only diamond shaped warning sign sizes are indicated.
6. See sign size listing in "TMUTCD", Sign Appendix or the "Standard Highway Sign Designs for Texas" manual for complete list of available sign design sizes.

WORK AREAS IN MULTIPLE LOCATIONS WITHIN CSJ LIMITS

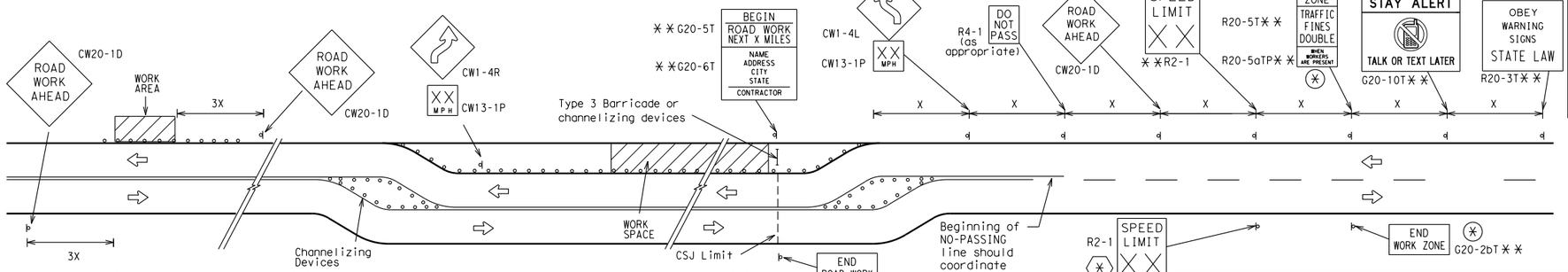

When extended distances occur between minimal work spaces, the Engineer/Inspector should ensure additional "ROAD WORK AHEAD"(CW20-1D)signs are placed in advance of these work areas to remind drivers they are still within the project limits. See the applicable TCP sheets for exact location and spacing of signs and channelizing devices.

SAMPLE LAYOUT OF SIGNING FOR WORK BEGINNING DOWNSTREAM OF THE CSJ LIMITS

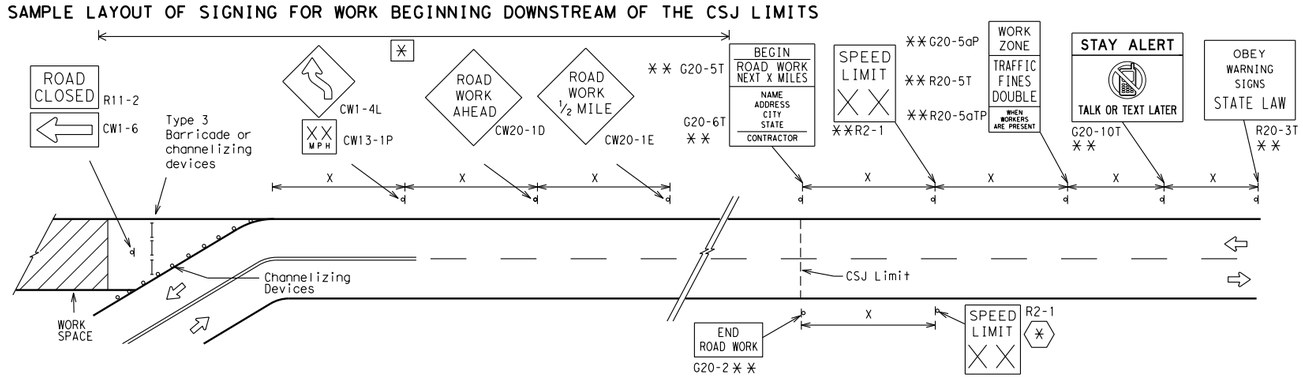

NOTES

The Contractor shall determine the appropriate distance to be placed on the G20-1 series signs and "BEGIN ROAD WORK NEXT X MILES"(G20-5T)sign for each specific project. This distance shall replace the "X" and shall be rounded to the nearest whole mile with the approval of the Engineer. No decimals shall be used.

(✱) The "BEGIN WORK ZONE"(G20-9TP) and "END WORK ZONE" (G20-2bT) shall be used as shown on the sample layout when advance signs are required outside the CSJ Limits. They inform the motorist of entering or leaving a part of the work zone lying outside the CSJ Limits where traffic fines may double if workers are present.

✱✱ Required CSJ Limit signing. See Note 10 on BC(1). TRAFFIC FINES DOUBLE signs will not be required on projects consisting solely of mobile operations work.

[✱] Area for placement of "ROAD WORK AHEAD" (CW20-1D)sign and other signs or devices as called for on the Traffic Control Plan.

(✱) Contractor will install a regulatory speed limit sign at the end of the work zone.

LEGEND	
⊢⊣	Type 3 Barricade
○ ○ ○	Channelizing Devices
▬	Sign
X	See Typical Construction Warning Sign Size and Spacing chart or the TMUTCD for sign spacing requirements.

SHEET 2 OF 12

Texas Department of Transportation — Traffic Operations Division Standard

BARRICADE AND CONSTRUCTION PROJECT LIMIT

BC(2)-14

FILE: bc-14.dgn	DN: TxDOT	CK: TxDOT	DW: TxDOT	CK: TxDOT
© TxDOT November 2002	CONT	SECT	JOB	HIGHWAY
REVISIONS 9-07 8-14 7-13	DIST	COUNTY		SHEET NO. 31 OF 152

DATE:
FILE:

TYPICAL APPLICATION OF WORK ZONE SPEED LIMIT SIGNS

Work zone speed limits shall be regulatory, established in accordance with the "Procedures for Establishing Speed Zones," and approved by the Texas Transportation Commission, or by City Ordinance when within Incorporated City Limits.

Reduced speeds should only be posted in the vicinity of work activity and not throughout the entire project.

Regulatory work zone speed signs (R2-1) shall be removed or covered during periods when they are not needed.

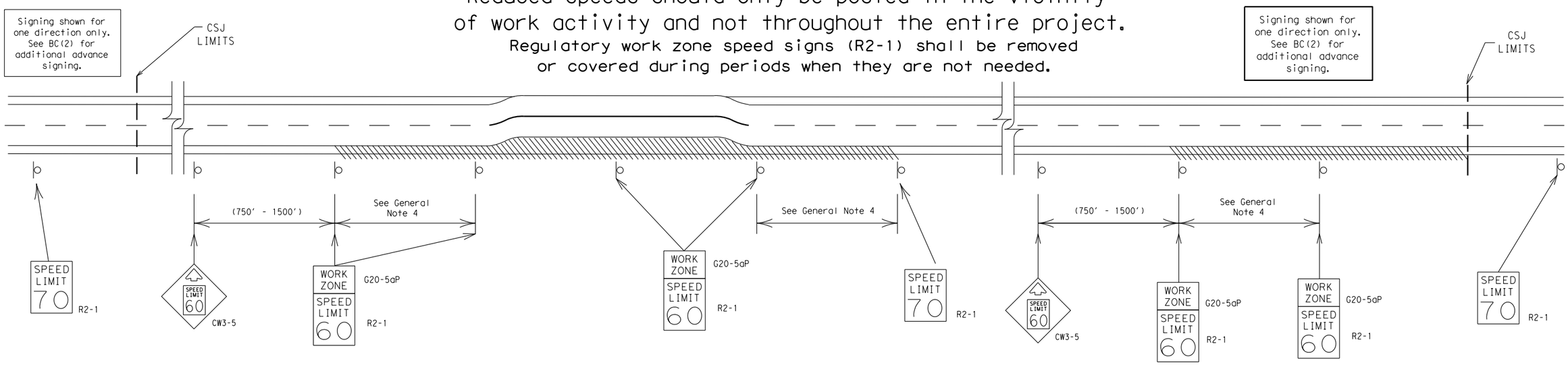

GUIDANCE FOR USE:

LONG/INTERMEDIATE TERM WORK ZONE SPEED LIMITS

This type of work zone speed limit should be included on the design of the traffic control plans when restricted geometrics with a lower design speed are present in the work zone and modification of the geometrics to a higher design speed is not feasible.

Long/Intermediate Term Work Zone Speed Limit signs, when approved as described above, should be posted and visible to the motorist when work activity is present. Work activity may also be defined as a change in the roadway that requires a reduced speed for motorists to safely negotiate the work area, including:

a) rough road or damaged pavement surface
b) substantial alteration of roadway geometrics (diversions)
c) construction detours
d) grade
e) width
f) other conditions readily apparent to the driver

As long as any of these conditions exist, the work zone speed limit signs should remain in place.

SHORT TERM WORK ZONE SPEED LIMITS

This type of work zone speed limit may be included on the design of the traffic control plans when workers or equipment are not behind concrete barrier, when work activity is within 10 feet of the traveled way or actually in the travelled way.

Short Term Work Zone Speed Limit signs should be posted and visible to the motorists only when work activity is present. When work activity is not present, signs shall be removed or covered.
(See Removing or Covering on BC(4)).

GENERAL NOTES

1. Regulatory work zone speed limits should be used only for sections of construction projects where speed control is of major importance.
2. Regulatory work zone speed limit signs shall be placed on supports at a 7 foot minimum mounting height.
3. Speed zone signs are illustrated for one direction of travel and are normally posted for each direction of travel.
4. Frequency of work zone speed limit signs should be:
   40 mph and greater 0.2 to 2 miles
   35 mph and less 0.2 to 1 mile
5. Regulatory speed limit signs shall have black legend and border on a white reflective background (See "Reflective Sheeting" on BC(4)).
6. Fabrication, erection and maintenance of the"ADVANCE SPEED LIMIT"(CW3-5)sign, "WORK ZONE"(G20-5aP) plaque and the "SPEED LIMIT"(R2-1)signs shall not be paid for directly, but shall be considered subsidiary to Item 502.
7. Turning signs from view, laying signs over or down will not be allowed, unless as otherwise noted under "REMOVING OR COVERING" on BC(4).
8. Techniques that may help reduce traffic speeds include but are not limited to:
   A. Law enforcement.
   B. Flagger stationed next to sign.
   C. Portable changeable message sign (PCMS).
   D. Low-power (drone) radar transmitter.
   E. Speed monitor trailers or signs.
9. Speeds shown on details above are for illustration only.
   Work Zone Speed Limits should only be posted as approved for each project.
10. For more specific guidance concerning the type of work, work zone conditions and factors impacting allowable regulatory construction speed zone reduction see TxDOT form #1204 in the TxDOT e-form system.

DISCLAIMER:
The use of this standard is governed by the "Texas Engineering Practice Act". No warranty of any kind is made by TxDOT for any purpose whatsoever. TxDOT assumes no responsibility for the conversion of this standard to other formats or for incorrect results or damages resulting from its use.

DATE:
FILE:

SHEET 3 OF 12

Texas Department of Transportation — Traffic Operations Division Standard

BARRICADE AND CONSTRUCTION WORK ZONE SPEED LIMIT

BC(3)-14

FILE: bc-14.dgn	DN: TxDOT	CK: TxDOT	DW: TxDOT	CK: TxDOT
©TxDOT November 2002	CONT	SECT	JOB	HIGHWAY
REVISIONS 9-07 8-14 7-13	DIST	COUNTY		SHEET NO. 32 OF 152

DISCLAIMER:
The use of this standard is governed by the "Texas Engineering Practice Act". No warranty of any kind is made by TxDOT for any purpose whatsoever. TxDOT assumes no responsibility for the conversion of this standard to other formats or for incorrect results or damages resulting from its use.

TYPICAL MINIMUM CLEARANCES FOR LONG TERM AND INTERMEDIATE TERM SIGNS

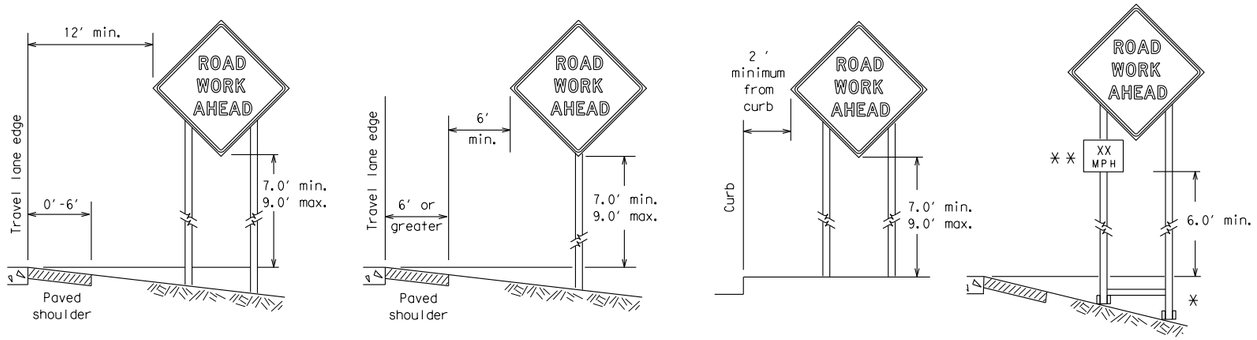

✳ When placing skid supports on unlevel ground, the leg post lengths must be adjusted so the sign appears straight and plumb. Objects shall NOT be placed under skids as a means of leveling.

✳✳ When plaques are placed on dual-leg supports, they should be attached to the upright nearest the travel lane. Supplemental plaques (advisory or distance) should not cover the surface of the parent sign.

ATTACHMENT FOR SIGN SUPPORTS

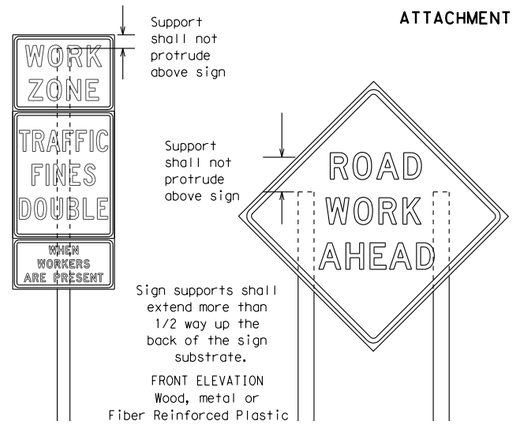

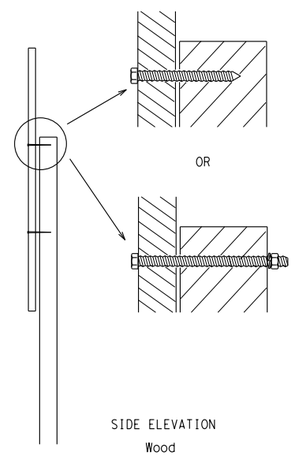

Attachment to wooden supports will be by bolts and nuts or screws. Use TxDOT's or manufacturer's recommended procedures for attaching sign substrates to other types of sign supports

Nails shall NOT be allowed. Each sign shall be attached directly to the sign support. Multiple signs shall not be joined or spliced by any means. Wood supports shall not be extended or repaired by splicing or other means.

Splicing embedded perforated square metal tubing in order to extend post height will only be allowed when the splice is made using four bolts, two above and two below the spice point. Splice must be located entirely behind the sign substrate, not near the base of the support. Splice insert lengths should be at least 5 times nominal post size, centered on the splice and of at least the same gauge material.

STOP/SLOW PADDLES

1. STOP/SLOW paddles are the primary method to control traffic by flaggers. The STOP/SLOW paddle size should be 24" x 24" as detailed below.
2. When used at night, the STOP/SLOW paddle shall be retroreflectorized.
3. STOP/SLOW paddles may be attached to a staff with a minimum length of 6′ to the bottom of the sign.
4. Any lights incorporated into the STOP or SLOW paddle faces shall only be as specifically described in Section 6E.03 Hand Signaling Devices in the TMUTCD.

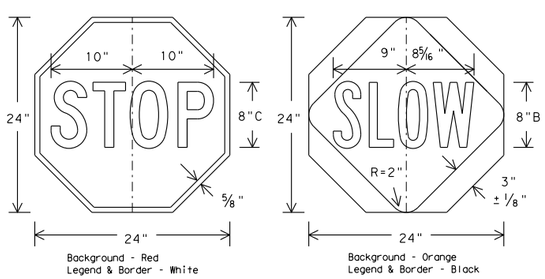

CONTRACTOR REQUIREMENTS FOR MAINTAINING PERMANENT SIGNS WITHIN THE PROJECT LIMITS

1. Permanent signs are used to give notice of traffic laws or regulations, call attention to conditions that are potentially hazardous to traffic operations, show route designations, destinations, directions, distances, services, points of interest, and other geographical, recreational, or cultural information. Drivers proceeding through a work zone need the same, if not better route guidance as normally installed on a roadway without construction.
2. When permanent regulatory or warning signs conflict with work zone conditions, remove or cover the permanent signs until the permanent sign message matches the roadway condition.
3. When existing permanent signs are moved and relocated due to construction purposes, they shall be visible to motorists at all times.
4. If existing signs are to be relocated on their original supports, they shall be installed on crashworthy bases as shown on the SMD Standard sheets. The signs shall meet the required mounting heights shown on the BC Sheets or the SMD Standards. This work should be paid for under the appropriate pay item for relocating existing signs.
5. If permanent signs are to be removed and relocated using temporary supports, the Contractor shall use crashworthy supports as shown on the BC sheets or the CWZTCD. The signs shall meet the required mounting heights shown on the BC Sheets or the SMD Standards during construction. This work should be paid for under the appropriate pay item for relocating existing signs.
6. Any sign or traffic control device that is struck or damaged by the Contractor or his/her construction equipment shall be replaced as soon as possible by the Contractor to ensure proper guidance for the motorists. This will be subsidiary to Item 502.

GENERAL NOTES FOR WORK ZONE SIGNS

1. Contractor shall install and maintain signs in a straight and plumb condition and/or as directed by the Engineer.
2. Wooden sign posts shall be painted white.
3. Barricades shall NOT be used as sign supports.
4. All signs shall be installed in accordance with the plans or as directed by the Engineer. Signs shall be used to regulate, warn, and guide the traveling public safely through the work zone.
5. The Contractor may furnish either the sign design shown in the plans or in the "Standard Highway Sign Designs for Texas" (SHSD). The Engineer/Inspector may require the Contractor to furnish other work zone signs that are shown in the TMUTCD but may have been omitted from the plans. Any variation in the plans shall be documented by written agreement between the Engineer and the Contractor's Responsible Person. All changes must be documented in writing before being implemented. This can include documenting the changes in the Inspector's TxDOT diary and having both the Inspector and Contractor initial and date the agreed upon changes.
6. The Contractor shall furnish sign supports listed in the "Compliant Work Zone Traffic Control Device List" (CWZTCD). The Contractor shall install the sign support in accordance with the manufacturer's recommendations. If there is a question regarding installation procedures, the Contractor shall furnish the Engineer a copy of the manufacturer's installation recommendations so the Engineer can verify the correct procedures are being followed.
7. The Contractor is responsible for installing signs on approved supports and replacing signs with damaged or cracked substrates and/or damaged or marred reflective sheeting as directed by the Engineer/Inspector.
8. Identification markings may be shown only on the back of the sign substrate. The maximum height of letters and/or company logos used for identification shall be 1 inch.
9. The Contractor shall replace damaged wood posts. New or damaged wood sign posts shall not be spliced.

DURATION OF WORK (as defined by the "Texas Manual on Uniform Traffic Control Devices" Part 6)

1. The types of sign supports, sign mounting height, the size of signs, and the type of sign substrates can vary based on the type of work being performed. The Engineer is responsible for selecting the appropriate size sign for the type of work being performed. The Contractor is responsible for ensuring the sign support, sign mounting height and substrate meets manufacturer's recommendations in regard to crashworthiness and duration of work requirements.
   a. Long-term stationary - work that occupies a location more than 3 days.
   b. Intermediate-term stationary - work that occupies a location more than one daylight period up to 3 days, or nighttime work lasting more than one hour.
   c. Short-term stationary - daytime work that occupies a location for more than 1 hour in a single daylight period.
   d. Short, duration - work that occupies a location up to 1 hour.
   e. Mobile - work that moves continuously or intermittently (stopping for up to approximately 15 minutes.)

SIGN MOUNTING HEIGHT

1. The bottom of Long-term/Intermediate-term signs shall be at least 7 feet, but not more than 9 feet, above the paved surface, except as shown for supplemental plaques mounted below other signs.
2. The bottom of Short-term/Short Duration signs shall be a minimum of 1 foot above the pavement surface but no more than 2 feet above the ground.
3. Long-term/Intermediate-term Signs may be used in lieu of Short-term/Short Duration signing.
4. Short-term/Short Duration signs shall be used only during daylight and shall be removed at the end of the workday or raised to appropriate Long-term/Intermediate sign height.
5. Regulatory signs shall be mounted at least 7 feet, but not more than 9 feet, above the paved surface regardless of work duration.

SIZE OF SIGNS

1. The Contractor shall furnish the sign sizes shown on BC (2) unless otherwise shown in the plans or as directed by the Engineer.

SIGN SUBSTRATES

1. The Contractor shall ensure the sign substrate is installed in accordance with the manufacturer's recommendations for the type of sign support that is being used. The CWZTCD lists each substrate that can be used on the different types and models of sign supports.
2. "Mesh" type materials are NOT an approved sign substrate, regardless of the tightness of the weave.
3. All wooden individual sign panels fabricated from 2 or more pieces shall have one or more plywood cleat, 1/2" thick by 6" wide, fastened to the back of the sign and extending fully across the sign. The cleat shall be attached to the back of the sign using wood screws that do not penetrate the face of the sign panel. The screws shall be placed on both sides of the splice and spaced at 6" centers. The Engineer may approve other methods of splicing the sign face.

REFLECTIVE SHEETING

1. All signs shall be retroreflective and constructed of sheeting meeting the color and retro-reflectivity requirements of DMS-8300 for rigid signs or DMS-8310 for roll-up signs. The web address for DMS specifications is shown on BC(1).
2. White sheeting, meeting the requirements of DMS-8300 Type A, shall be used for signs with a white background.
3. Orange sheeting, meeting the requirements of DMS-8300 Type B_{FL} or Type C_{FL}, shall be used for rigid signs with orange backgrounds.

SIGN LETTERS

1. All sign letters and numbers shall be clear, and open rounded type uppercase alphabet letters as approved by the Federal Highway Administration (FHWA) and as published in the "Standard Highway Sign Design for Texas" manual. Signs, letters and numbers shall be of first class workmanship in accordance with Department Standards and Specifications.

REMOVING OR COVERING

1. When sign messages may be confusing or do not apply, the signs shall be removed or completely covered.
2. Long-term stationary or intermediate stationary signs installed on square metal tubing may be turned away from traffic 90 degrees when the sign message is not applicable. This technique may not be used for signs installed in the median of divided highways or near any intersections where the sign may be seen from approaching traffic.
3. Signs installed on wooden skids shall not be turned at 90 degree angles to the roadway. These signs should be removed or completely covered when not required.
4. When signs are covered, the material used shall be opaque, such as heavy mil black plastic, or other materials which will cover the entire sign face and maintain their opaque properties under automobile headlights at night, without damaging the sign sheeting.
5. Burlap shall NOT be used to cover signs.
6. Duct tape or other adhesive material shall NOT be affixed to a sign face.
7. Signs and anchor stubs shall be removed and holes backfilled upon completion of work.

SIGN SUPPORT WEIGHTS

1. Where sign supports require the use of weights to keep from turning over, the use of sandbags with dry, cohesionless sand should be used.
2. The sandbags will be tied shut to keep the sand from spilling and to maintain a constant weight.
3. Rock, concrete, iron, steel or other solid objects shall not be permitted for use as sign support weights.
4. Sandbags should weigh a minimum of 35 lbs and a maximum of 50 lbs.
5. Sandbags shall be made of a durable material that tears upon vehicular impact. Rubber (such as tire inner tubes) shall NOT be used.
6. Rubber ballasts designed for channelizing devices should not be used for ballast on portable sign supports. Sign supports designed and manufactured with rubber bases may be used when shown on the CWZTCD list.
7. Sandbags shall only be placed along or laid over the base supports of the traffic control device and shall not be suspended above ground level or hung with rope, wire, chains or other fasteners. Sandbags shall be placed along the length of the skids to weigh down the sign support.
8. Sandbags shall NOT be placed under the skid and shall not be used to level sign supports placed on slopes.

FLAGS ON SIGNS

1. Flags may be used to draw attention to warning signs. When used the flag shall be 16 inches square or larger and shall be orange or fluorescent red-orange in color. Flags shall not be allowed to cover any portion of the sign face.

Texas Department of Transportation — Traffic Operations Division Standard

BARRICADE AND CONSTRUCTION TEMPORARY SIGN NOTES

BC(4)-14

FILE: bc-14.dgn	DN: TxDOT	CK: TxDOT	DW: TxDOT	CK: TxDOT
© TxDOT November 2002	CONT	SECT	JOB	HIGHWAY
REVISIONS 9-07 8-14 7-13	DIST		COUNTY	SHEET NO. 33 OF 152

DATE:
FILE:

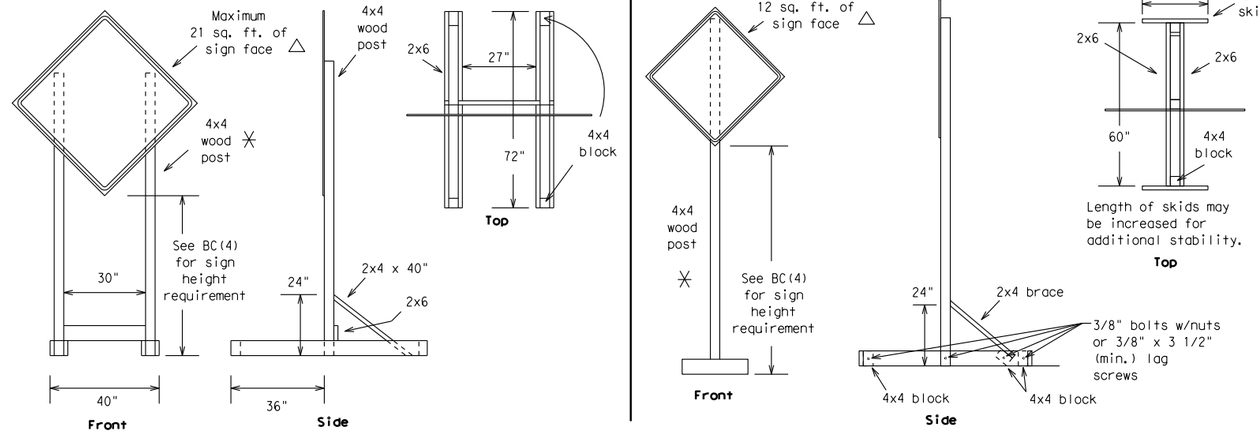

SKID MOUNTED WOOD SIGN SUPPORTS

LONG/INTERMEDIATE TERM STATIONARY - PORTABLE SKID MOUNTED SIGN SUPPORTS □

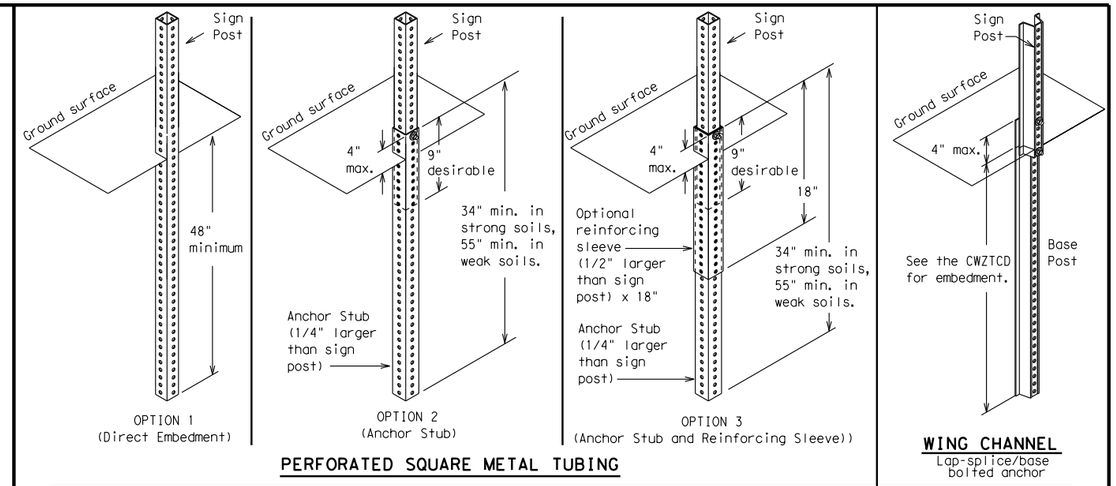

PERFORATED SQUARE METAL TUBING

WING CHANNEL
Lap-splice/base bolted anchor

GROUND MOUNTED SIGN SUPPORTS

Refer to the CWZTCD and the manufacturer's installation procedure for each type sign support.
The maximum sign square footage shall adhere to the manufacturer's recommendation.
Two post installations can be used for larger signs.

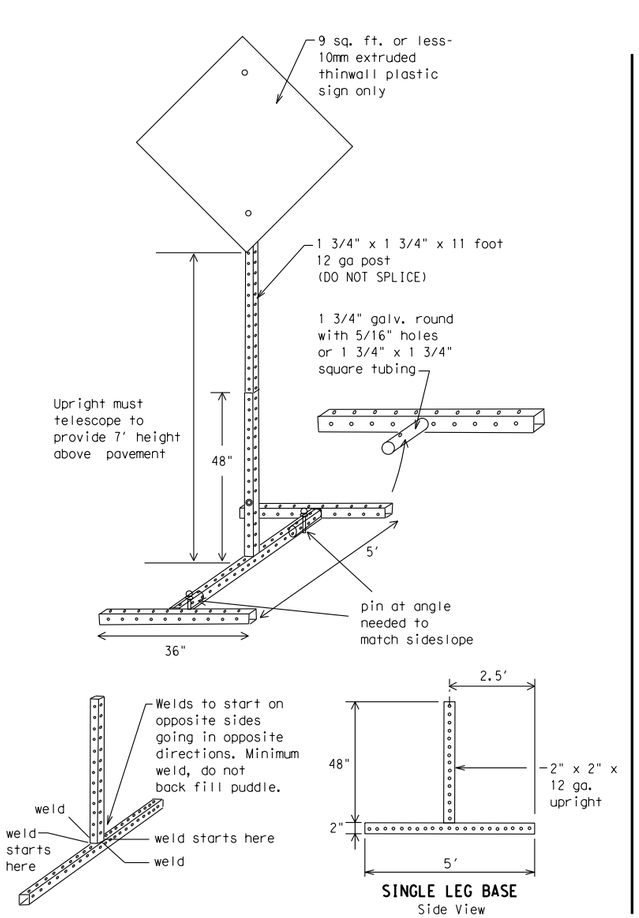

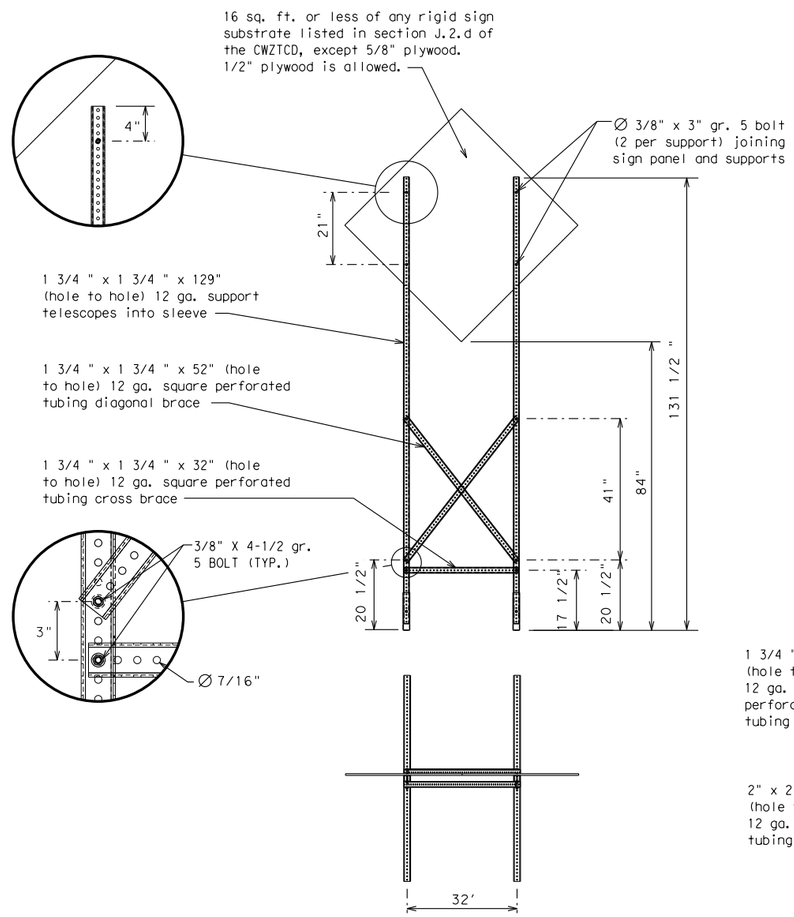

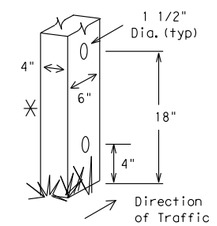

Nominal Post Size	Number of Posts	Maximum Sq. feet of Sign Face	Minimum Soil Embedment	Drilled Hole(s) Required
4 x 4	1	12	36"	NO
4 x 4	2	21	36"	NO
4 x 6	1	21	36"	YES
4 x 6	2	36	36"	YES

WOOD POST SYSTEM FOR GROUND MOUNTED SIGN SUPPORTS

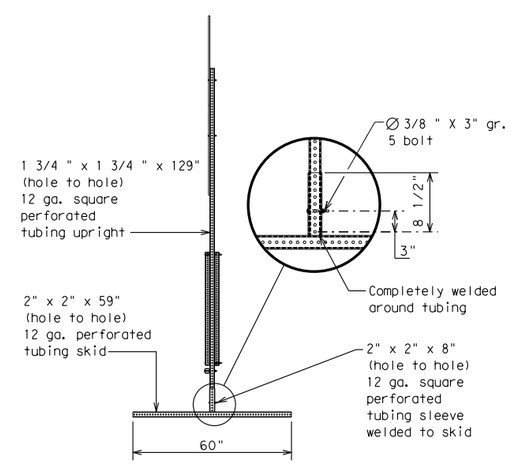

SKID MOUNTED PERFORATED SQUARE STEEL TUBING SIGN SUPPORTS

WEDGE ANCHORS

Both steel and plastic Wedge Anchor Systems as shown on the SMD Standard Sheets may be used as temporary sign supports for signs up to 10 square feet of sign face. They may be set in concrete or in sturdy soils if approved by the Engineer. (See web address for "Traffic Engineering Standard Sheets" on BC(1)).

OTHER DESIGNS

MORE DETAILS OF APPROVED LONG/INTERMEDIATE AND SHORT TERM SUPPORTS CAN BE FOUND ON THE CWZTCD LIST. SEE BC(1) FOR WEBSITE LOCATION.

GENERAL NOTES

1. Nails may be used in the assembly of wooden sign supports, but 3/8" bolts with nuts or 3/8" x 3 1/2" lag screws must be used on every joint for final connection.
2. No more than 2 sign posts shall be placed within a 7 ft. circle, except for specific materials noted on the CWZTCD List.
3. When project is completed, all sign supports and foundations shall be removed from the project site. This will be considered subsidiary to Item 502.

□ See BC(4) for definition of "Work Duration."

✳ Wood sign posts MUST be one piece. Splicing will NOT be allowed. Posts shall be painted white.

△ See the CWZTCD for the type of sign substrate that can be used for each approved sign support.

SHEET 5 OF 12

Texas Department of Transportation — Traffic Operations Division Standard

BARRICADE AND CONSTRUCTION TYPICAL SIGN SUPPORT

BC(5)-14

FILE: bc-14.dgn	DN: TxDOT	CK: TxDOT	DW: TxDOT	CK: TxDOT
© TxDOT November 2002	CONT	SECT	JOB	HIGHWAY
REVISIONS 9-07 8-14 7-13	DIST	COUNTY		SHEET NO. 34 OF 152

99

DISCLAIMER:
The use of this standard is governed by the "Texas Engineering Practice Act". No warranty of any kind is made by TxDOT for any purpose whatsoever. TxDOT assumes no responsibility for the conversion of this standard to other formats or for incorrect results or damages resulting from its use.

DATE:
FILE:

WHEN NOT IN USE, REMOVE THE PCMS FROM THE RIGHT-OF-WAY OR PLACE THE PCMS BEHIND BARRIER OR GUARDRAIL WITH SIGN PANEL TURNED PARALLEL TO TRAFFIC

PORTABLE CHANGEABLE MESSAGE SIGNS

1. The Engineer/Inspector shall approve all messages used on portable changeable message signs (PCMS).
2. Messages on PCMS should contain no more than 8 words (about four to eight characters per word), not including simple words such as "TO," "FOR," "AT," etc.
3. Messages should consist of a single phase, or two phases that alternate. Three-phase messages are not allowed. Each phase of the message should convey a single thought, and must be understood by itself.
4. Use the word "EXIT" to refer to an exit ramp on a freeway; i.e., "EXIT CLOSED." Do not use the term "RAMP."
5. Always use the route or interstate designation (IH, US, SH, FM) along with the number when referring to a roadway.
6. When in use the bottom of a stationary PCMS message panel should be a minimum 7 feet above the roadway, where possible.
7. The message term "WEEKEND" should be used only if the work is to start on Saturday morning and end by Sunday evening at midnight. Actual days and hours of work should be displayed on the PCMS if work is to begin on Friday evening and/or continue into Monday morning.
8. The Engineer/Inspector may select one of two options which are available for displaying a two-phase message on a PCMS. Each phase may be displayed for either four seconds each or for three seconds each.
9. Do not "flash" messages or words included in a message. The message should be steady burn or continuous while displayed.
10. Do not present redundant information on a two-phase message; i.e., keeping two lines of the message the same and changing the third line.
11. Do not use the word "Danger" in message.
12. Do not display the message "LANES SHIFT LEFT" or "LANES SHIFT RIGHT" on a PCMS. Drivers do not understand the message.
13. Do not display messages that scroll horizontally or vertically across the face of the sign.
14. The following table lists abbreviated words and two-word phrases that are acceptable for use on a PCMS. Both words in a phrase must be displayed together. Words or phrases not on this list should not be abbreviated, unless shown in the TMUTCD.
15. PCMS character height should be at least 18 inches for trailer mounted units. They should be visible from at least 1/2 (.5) mile and the text should be legible from at least 600 feet at night and 800 feet in daylight. Truck mounted units must have a character height of 10 inches and must be legible from at least 400 feet.
16. Each line of text should be centered on the message board rather than left or right justified.
17. If disabled, the PCMS should default to an illegible display that will not alarm motorists and will only be used to alert workers that the PCMS has malfunctioned. A pattern such as a series of horizontal solid bars is appropriate.

WORD OR PHRASE	ABBREVIATION
Access Road	ACCS RD
Alternate	ALT
Avenue	AVE
Best Route	BEST RTE
Boulevard	BLVD
Bridge	BRDG
Cannot	CANT
Center	CTR
Construction Ahead	CONST AHD
CROSSING	XING
Detour Route	DETOUR RTE
Do Not	DONT
East	E
Eastbound	(route) E
Emergency	EMER
Emergency Vehicle	EMER VEH
Entrance, Enter	ENT
Express Lane	EXP LN
Expressway	EXPWY
XXXX Feet	XXXX FT
Fog Ahead	FOG AHD
Freeway	FRWY, FWY
Freeway Blocked	FWY BLKD
Friday	FRI
Hazardous Driving	HAZ DRIVING
Hazardous Material	HAZMAT
High-Occupancy	HOV
Vehicle Highway	HWY
Hour(s)	HR, HRS
Information	INFO
It Is	ITS
Junction	JCT
Left	LFT
Left Lane	LFT LN
Lane Closed	LN CLOSED
Lower Level	LWR LEVEL
Maintenance	MAINT

WORD OR PHRASE	ABBREVIATION
Major	MAJ
Miles	MI
Miles Per Hour	MPH
Minor	MNR
Monday	MON
Normal	NORM
North	N
Northbound	(route) N
Parking	PKING
Road	RD
Right Lane	RT LN
Saturday	SAT
Service Road	SERV RD
Shoulder	SHLDR
Slippery	SLIP
South	S
Southbound	(route) S
Speed	SPD
Street	ST
Sunday	SUN
Telephone	PHONE
Temporary	TEMP
Thursday	THURS
To Downtown	TO DWNTN
Traffic	TRAF
Travelers	TRVLRS
Tuesday	TUES
Time Minutes	TIME MIN
Upper Level	UPR LEVEL
Vehicles (s)	VEH, VEHS
Warning	WARN
Wednesday	WED
Weight Limit	WT LIMIT
West	W
Westbound	(route) W
Wet Pavement	WET PVMT
Will Not	WONT

Roadway designation # IH-number, US-number, SH-number, FM-number

RECOMMENDED PHASES AND FORMATS FOR PCMS MESSAGES DURING ROADWORK ACTIVITIES

(The Engineer may approve other messages not specifically covered here.)

Phase 1: Condition Lists

Road/Lane/Ramp Closure List

FREEWAY CLOSED X MILE	FRONTAGE ROAD CLOSED
ROAD CLOSED AT SH XXX	SHOULDER CLOSED XXX FT
ROAD CLSD AT FM XXXX	RIGHT LN CLOSED XXX FT
RIGHT X LANES CLOSED	RIGHT X LANES OPEN
CENTER LANE CLOSED	DAYTIME LANE CLOSURES
NIGHT LANE CLOSURES	I-XX SOUTH EXIT CLOSED
VARIOUS LANES CLOSED	EXIT XXX CLOSED X MILE
EXIT CLOSED	RIGHT LN TO BE CLOSED
MALL DRIVEWAY CLOSED	X LANES CLOSED TUE - FRI
XXXXXXXX BLVD CLOSED	

Other Condition List

ROADWORK XXX FT	ROAD REPAIRS XXXX FT
FLAGGER XXXX FT	LANE NARROWS XXXX FT
RIGHT LN NARROWS XXXX FT	TWO-WAY TRAFFIC XX MILE
MERGING TRAFFIC XXXX FT	CONST TRAFFIC XXX FT
LOOSE GRAVEL XXXX FT	UNEVEN LANES XXXX FT
DETOUR X MILE	ROUGH ROAD XXXX FT
ROADWORK PAST SH XXXX	ROADWORK NEXT FRI-SUN
BUMP XXXX FT	US XXX EXIT X MILES
TRAFFIC SIGNAL XXXX FT	LANES SHIFT *

* LANES SHIFT in Phase 1 must be used with STAY IN LANE in Phase 2.

Phase 2: Possible Component Lists

Action to Take/Effect on Travel List

MERGE RIGHT	FORM X LINES RIGHT
DETOUR NEXT X EXITS	USE XXXXX RD EXIT
USE EXIT XXX	USE EXIT I-XX NORTH
STAY ON US XXX SOUTH	USE I-XX E TO I-XX N
TRUCKS USE US XXX N	WATCH FOR TRUCKS
WATCH FOR TRUCKS	EXPECT DELAYS
EXPECT DELAYS	PREPARE TO STOP
REDUCE SPEED XXX FT	END SHOULDER USE
USE OTHER ROUTES	WATCH FOR WORKERS
STAY IN LANE *	

Location List

AT FM XXXX

BEFORE RAILROAD CROSSING

NEXT X MILES

PAST US XXX EXIT

XXXXXXX TO XXXXXXX

US XXX TO FM XXXX

Warning List

SPEED LIMIT XX MPH

MAXIMUM SPEED XX MPH

MINIMUM SPEED XX MPH

ADVISORY SPEED XX MPH

RIGHT LANE EXIT

USE CAUTION

DRIVE SAFELY

DRIVE WITH CARE

** Advance Notice List

TUE-FRI XX AM- X PM

APR XX- XX X PM-X AM

BEGINS MONDAY

BEGINS MAY XX

MAY X-X XX PM - XX AM

NEXT FRI-SUN

XX AM TO XX PM

NEXT TUE AUG XX

TONIGHT XX PM- XX AM

** See Application Guidelines Note 6.

APPLICATION GUIDELINES

1. Only 1 or 2 phases are to be used on a PCMS.
2. The 1st phase (or both) should be selected from the "Road/Lane/Ramp Closure List" and the "Other Condition List".
3. A 2nd phase can be selected from the "Action to Take/Effect on Travel, Location, General Warning, or Advance Notice Phase Lists".
4. A Location Phase is necessary only if a distance or location is not included in the first phase selected.
5. If two PCMS are used in sequence, they must be separated by a minimum of 1000 ft. Each PCMS shall be limited to two phases, and should be understandable by themselves.
6. For advance notice, when the current date is within seven days of the actual work date, calendar days should be replaced with days of the week. Advance notification should typically be for no more than one week prior to the work.

WORDING ALTERNATIVES

1. The words RIGHT, LEFT and ALL can be interchanged as appropriate.
2. Roadway designations IH, US, SH, FM and LP can be interchanged as appropriate.
3. EAST, WEST, NORTH and SOUTH (or abbreviations E, W, N and S) can be interchanged as appropriate.
4. Highway names and numbers replaced as appropriate.
5. ROAD, HIGHWAY and FREEWAY can be interchanged as needed.
6. AHEAD may be used instead of distances if necessary.
7. FT and MI, MILE and MILES interchanged as appropriate.
8. AT, BEFORE and PAST interchanged as needed.
9. Distances or AHEAD can be eliminated from the message if a location phase is used.

PCMS SIGNS WITHIN THE R.O.W. SHALL BE BEHIND GUARDRAIL OR CONCRETE BARRIER OR SHALL HAVE A MINIMUM OF FOUR (4) PLASTIC DRUMS PLACED PERPENDICULAR TO TRAFFIC ON THE UPSTREAM SIDE OF THE PCMS, WHEN EXPOSED TO ONE DIRECTION OF TRAFFIC. WHEN EXPOSED TO TWO WAY TRAFFIC, THE FOUR DRUMS SHOULD BE PLACED WITH ONE DRUM AT EACH OF THE FOUR CORNERS OF THE UNIT.

FULL MATRIX PCMS SIGNS

1. When Full Matrix PCMS signs are used, the character height and legibility/visibility requirements shall be maintained as listed in Note 15 under "PORTABLE CHANGEABLE MESSAGE SIGNS" above.
2. When symbol signs, such as the "Flagger Symbol"(CW20-7) are represented graphically on the Full Matrix PCMS sign and, with the approval of the Engineer, it shall maintain the legibility/visibility requirement listed above.
3. When symbol signs are represented graphically on the Full Matrix PCMS, they shall only supplement the use of the static sign represented, and shall not substitute for, or replace that sign.
4. A full matrix PCMS may be used to simulate a flashing arrow board provided it meets the visibility, flash rate and dimming requirements on BC(7), for the same size arrow.

DISCLAIMER:
The use of this standard is governed by the "Texas Engineering Practice Act". No warranty of any kind is made by TxDOT for any purpose whatsoever. TxDOT assumes no responsibility for the conversion of this standard to other formats or for incorrect results or damages resulting from its use.

DATE:
FILE:

Texas Department of Transportation — Traffic Operations Division Standard

BARRICADE AND CONSTRUCTION PORTABLE CHANGEABLE MESSAGE SIGN (PCMS)

BC(6)-14

FILE: bc-14.dgn	DN: TxDOT	CK: TxDOT	DW: TxDOT	CK: TxDOT
© TxDOT November 2002	CONT	SECT	JOB	HIGHWAY
REVISIONS 9-07 8-14 7-13	DIST		COUNTY	SHEET NO. 35 OF 152

100

DISCLAIMER:
The use of this standard is governed by the "Texas Engineering Practice Act". No warranty of any kind is made by TxDOT for any purpose whatsoever. TxDOT assumes no responsibility for the conversion of this standard to other formats or for incorrect results or damages resulting from its use.

1. Barrier Reflectors shall be pre-qualified, and conform to the color and reflectivity requirements of DMS-8600. A list of prequalified Barrier Reflectors can be found at the Material Producer List web address shown on BC(1).
2. Color of Barrier Reflectors shall be as specified in the TMUTCD. The cost of the reflectors shall be considered subsidiary to Item 512.

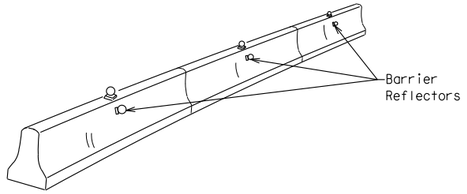

CONCRETE TRAFFIC BARRIER (CTB)

3. Where traffic is on one side of the CTB, two (2) Barrier Reflectors shall be mounted in approximately the midsection of each section of CTB. An alternate mounting location is uniformly spaced at one end of each CTB. This will allow for attachment of a barrier grapple without damaging the reflector. The Barrier Reflector mounted on the side of the CTB shall be located directly below the reflector mounted on top of the barrier, as shown in the detail above.
4. Where CTB separates two-way traffic, three barrier reflectors shall be mounted on each section of CTB. The reflector unit on top shall have two yellow reflective faces (Bi-Directional)while the reflectors on each side of the barrier shall have one yellow reflective face, as shown in the detail above.
5. When CTB separates traffic traveling in the same direction, no barrier reflectors will be required on top of the CTB.
6. Barrier Reflector units shall be yellow or white in color to match the edgeline being supplemented.
7. Maximum spacing of Barrier Reflectors is forty (40) feet.
8. Pavement markers or temporary flexible-reflective roadway marker tabs shall NOT be used as CTB delineation.
9. Attachment of Barrier Reflectors to CTB shall be per manufacturer's recommendations.
10. Missing or damaged Barrier Reflectors shall be replaced as directed by the Engineer.
11. Single slope barriers shall be delineated as shown on the above detail.

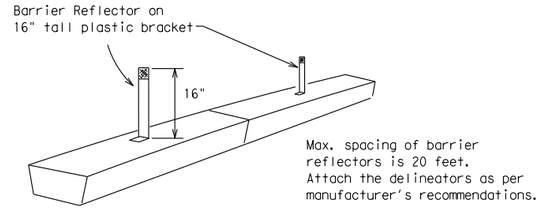

LOW PROFILE CONCRETE BARRIER (LPCB)

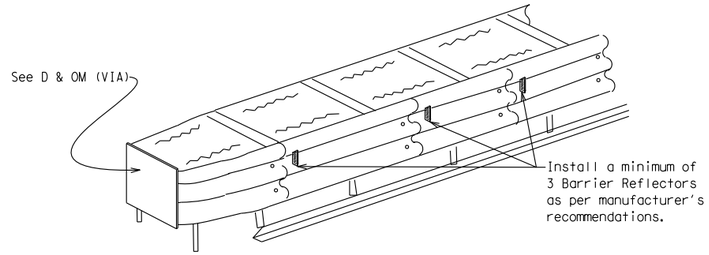

DELINEATION OF END TREATMENTS

END TREATMENTS FOR CTB'S USED IN WORK ZONES

End treatments used on CTB's in work zones shall meet crashworthy standards as defined in the National Cooperative Highway Research Report 350. Refer to the CWZTCD List for approved end treatments and manufacturers.

BARRIER REFLECTORS FOR CONCRETE TRAFFIC BARRIER AND ATTENUATORS

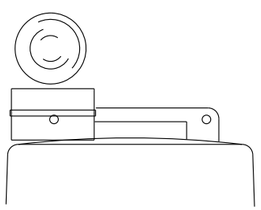

Type C Warning Light or approved substitute mounted on a drum adjacent to the travel way.

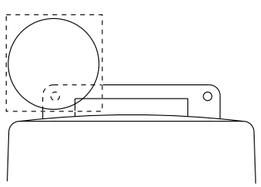

Warning reflector may be round or square.Must have a yellow reflective surface area of at least 30 square inches

WARNING LIGHTS

1. Warning lights shall meet the requirements of the TMUTCD.
2. Warning lights shall NOT be installed on barricades.
3. Type A-Low Intensity Flashing Warning Lights are commonly used with drums. They are intended to warn of or mark a potentially hazardous area. Their use shall be as indicated on this sheet and/or other sheets of the plans by the designation "FL". The Type A Warning Lights shall not be used with signs manufactured with Type B_{FL} or C_{FL} Sheeting meeting the requirements of Departmental Material Specification DMS-8300.
4. Type-C and Type D 360 degree Steady Burn Lights are intended to be used in a series for delineation to supplement other traffic control devices. Their use shall be as indicated on this sheet and/or other sheets of the plans by the designation "SB".
5. The Engineer/Inspector or the plans shall specify the location and type of warning lights to be installed on the traffic control devices.
6. When required by the Engineer, the Contractor shall furnish a copy of the warning lights certification. The warning light manufacturer will certify the warning lights meet the requirements of the latest ITE Purchase Specifications for Flashing and Steady-Burn Warning Lights.
7. When used to delineate curves, Type-C and Type D Steady Burn Lights should only be placed on the outside of the curve, not the inside.
8. The location of warning lights and warning reflectors on drums shall be as shown elsewhere in the plans.

WARNING LIGHTS MOUNTED ON PLASTIC DRUMS

1. Type A flashing warning lights are intended to warn drivers that they are approaching or are in a potentially hazardous area.
2. Type A random flashing warning lights are not intended for delineation and shall not be used in a series.
3. A series of sequential flashing warning lights placed on channelizing devices to form a merging taper may be used for delineation. If used, the successive flashing of the sequential warning lights should occur from the beginning of the taper to the end of the merging taper in order to identify the desired vehicle path. The rate of flashing for each light shall be 65 flashes per minute, plus or minus 10 flashes.
4. Type C and D steady-burn warning lights are intended to be used in a series to delineate the edge of the travel lane on detours, on lane changes, on lane closures, and on other similar conditions.
5. Type A, Type C and Type D warning lights shall be installed at locations as detailed on other sheets in the plans.
6. Warning lights shall not be installed on a drum that has a sign, chevron or vertical panel.
7. The maximum spacing for warning lights on drums should be identical to the channelizing device spacing.

WARNING REFLECTORS MOUNTED ON PLASTIC DRUMS AS A SUBSTITUTE FOR TYPE C (STEADY BURN) WARNING LIGHTS

1. A warning reflector or approved substitute may be mounted on a plastic drum as a substitute for a Type C, steady burn warning light at the discretion of the Contractor unless otherwise noted in the plans.
2. The warning reflector shall be yellow in color and shall be manufactured using a sign substrate approved for use with plastic drums listed on the CWZTCD.
3. The warning reflector shall have a minimum retroreflective surface area (one-side) of 30 square inches.
4. Round reflectors shall be fully reflectorized, including the area where attached to the drum.
5. Square substrates must have a minimum of 30 square inches of reflectorized sheeting. They do not have to be reflectorized where it attaches to the drum.
6. The side of the warning reflector facing approaching traffic shall have sheeting meeting the color and retroreflectivity requirements for DMS 8300-Type B or Type C.
7. When used near two-way traffic, both sides of the warning reflector shall be reflectorized.
8. The warning reflector should be mounted on the side of the handle nearest approaching traffic.
9. The maximum spacing for warning reflectors should be identical to the channelizing device spacing requirements.

Arrow Boards may be located behind channelizing devices in place for a shoulder taper or merging taper, otherwise they shall be delineated with four (4) channelizing devices placed perpendicular to traffic on the upstream side of traffic.

1. The Flashing Arrow Board should be used for all lane closures on multi-lane roadways, or slow moving maintenance or construction activities on the travel lanes.
2. Flashing Arrow Boards should not be used on two-lane, two-way roadways, detours, diversions or work on shoulders unless the "CAUTION" display (see detail below) is used.
3. The Engineer/Inspector shall choose all appropriate signs, barricades and/or other traffic control devices that should be used in conjunction with the Flashing Arrow Board.
4. The Flashing Arrow Board should be able to display the following symbols:

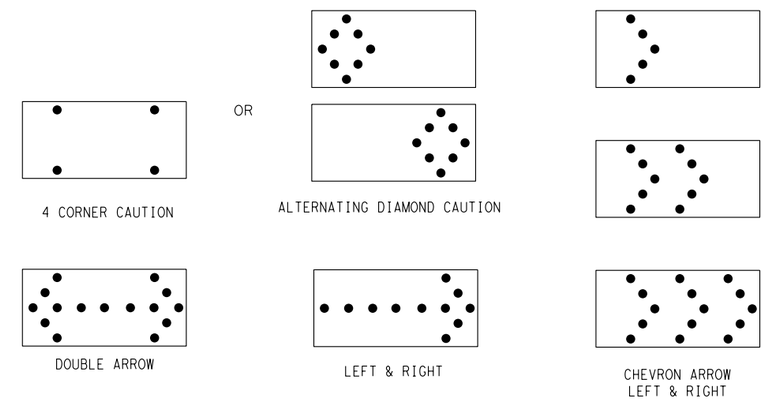

5. The "CAUTION" display consists of four corner lamps flashing simultaneously, or the Alternating Diamond Caution mode as shown.
6. The straight line caution display is NOT ALLOWED.
7. The Flashing Arrow Board shall be capable of minimum 50 percent dimming from rated lamp voltage. The flashing rate of the lamps shall not be less than 25 nor more than 40 flashes per minute.
8. Minimum lamp "on time" shall be approximately 50 percent for the flashing arrow and equal intervals of 25 percent for each sequential phase of the flashing chevron.
9. The sequential arrow display is NOT ALLOWED.
10. The flashing arrow display is the TxDOT standard; however, the sequential Chevron display may be used during daylight operations.
11. The Flashing Arrow Board shall be mounted on a vehicle, trailer or other suitable support.
12. A Flashing Arrow Board SHALL NOT BE USED to laterally shift traffic.
13. A full matrix PCMS may be used to simulate a Flashing Arrow Board provided it meets visibility, flash rate and dimming requirements on this sheet for the same size arrow.
14. Minimum mounting height of trailer mounted Arrow Boards should be 7 feet from roadway to bottom of panel.

REQUIREMENTS

TYPE	MINIMUM SIZE	MINIMUM NUMBER OF PANEL LAMPS	MINIMUM VISIBILITY DISTANCE
B	30 x 60	13	3/4 mile
C	48 x 96	15	1 mile

ATTENTION

Flashing Arrow Boards shall be equipped with automatic dimming devices.

WHEN NOT IN USE, REMOVE THE ARROW BOARD FROM THE RIGHT-OF-WAY OR PLACE THE ARROW BOARD BEHIND CONCRETE TRAFFIC BARRIER OR GUARDRAIL.

FLASHING ARROW BOARDS

TRUCK-MOUNTED ATTENUATORS

1. Truck-mounted attenuators (TMA) used on TxDOT facilities must meet the requirements outlined in the National Cooperative Highway Research Report No. 350 (NCHRP 350) or the Manual for Assessing Safety Hardware (MASH).
2. Refer to the CWZTCD for the requirements of Level 2 or Level 3 TMAs.
3. Refer to the CWZTCD for a list of approved TMAs.
4. TMAs are required on freeways unless otherwise noted in the plans.
5. A TMA should be used anytime that it can be positioned 30 to 100 feet in advance of the area of crew exposure without adversely affecting the work performance.
6. The only reason a TMA should not be required is when a work area is spread down the roadway and the work crew is an extended distance from the TMA.

Texas Department of Transportation — Traffic Operations Division Standard

BARRICADE AND CONSTRUCTION ARROW PANEL, REFLECTORS, WARNING LIGHTS & ATTENUATOR

BC(7)-14

FILE: bc-14.dgn	DN: TxDOT	CK: TxDOT	DW: TxDOT	CK: TxDOT
© TxDOT November 2002	CONT	SECT	JOB	HIGHWAY
REVISIONS 9-07 8-14 7-13	DIST		COUNTY	SHEET NO. 36 OF 152

101

DATE:
FILE:

DISCLAIMER:
The use of this standard is governed by the "Texas Engineering Practice Act". No warranty of any kind is made by TxDOT for any purpose whatsoever. TxDOT assumes no responsibility for the conversion of this standard to other formats or for incorrect results or damages resulting from its use.

DATE:
FILE:

GENERAL NOTES

1. For long term stationary work zones on freeways, drums shall be used as the primary channelizing device.
2. For intermediate term stationary work zones on freeways, drums should be used as the primary channelizing device but may be replaced in tangent sections by vertical panels, or 42" two-piece cones. In tangent sections one-piece cones may be used with the approval of the Engineer but only if personnel are present on the project at all times to maintain the cones in proper position and location.
3. For short term stationary work zones on freeways, drums are the preferred channelizing device but may be replaced in tapers, transitions and tangent sections by vertical panels, two-piece cones or one-piece cones as approved by the Engineer.
4. Drums and all related items shall comply with the requirements of the current version of the "Texas Manual on Uniform Traffic Control Devices" (TMUTCD) and the "Compliant Work Zone Traffic Control Devices List" (CWZTCD).
5. Drums, bases, and related materials shall exhibit good workmanship and shall be free from objectionable marks or defects that would adversely affect their appearance or serviceability.
6. The Contractor shall have a maximum of 24 hours to replace any plastic drums identified for replacement by the Engineer/Inspector. The replacement device must be an approved device.

GENERAL DESIGN REQUIREMENTS

Pre-qualified plastic drums shall meet the following requirements:

1. Plastic drums shall be a two-piece design; the "body" of the drum shall be the top portion and the "base" shall be the bottom.
2. The body and base shall lock together in such a manner that the body separates from the base when impacted by a vehicle traveling at a speed of 20 MPH or greater but prevents accidental separation due to normal handling and/or air turbulence created by passing vehicles.
3. Plastic drums shall be constructed of lightweight flexible, and deformable materials. The Contractor shall NOT use metal drums or single piece plastic drums as channelization devices or sign supports.
4. Drums shall present a profile that is a minimum of 18 inches in width at the 36 inch height when viewed from any direction. The height of drum unit (body installed on base) shall be a minimum of 36 inches and a maximum of 42 inches.
5. The top of the drum shall have a built-in handle for easy pickup and shall be designed to drain water and not collect debris. The handle shall have a minimum of two widely spaced 9/16 inch diameter holes to allow attachment of a warning light, warning reflector unit or approved compliant sign.
6. The exterior of the drum body shall have a minimum of four alternating orange and white retroreflective circumferential stripes not less than 4 inches nor greater than 8 inches in width. Any non-reflectorized space between any two adjacent stripes shall not exceed 2 inches in width.
7. Bases shall have a maximum width of 36 inches, a maximum height of 4 inches, and a minimum of two footholds of sufficient size to allow base to be held down while separating the drum body from the base.
8. Plastic drums shall be constructed of ultra-violet stabilized, orange, high-density polyethylene (HDPE) or other approved material.
9. Drum body shall have a maximum unballasted weight of 11 lbs.
10. Drum and base shall be marked with manufacturer's name and model number.

RETROREFLECTIVE SHEETING

1. The stripes used on drums shall be constructed of sheeting meeting the color and retroreflectivity requirements of Departmental Materials Specification DMS-8300, "Sign Face Materials." Type A reflective sheeting shall be supplied unless otherwise specified in the plans.
2. The sheeting shall be suitable for use on and shall adhere to the drum surface such that, upon vehicular impact, the sheeting shall remain adhered in-place and exhibit no delaminating, cracking, or loss of retroreflectivity other than that loss due to abrasion of the sheeting surface.

BALLAST

1. Unballasted bases shall be large enough to hold up to 50 lbs. of sand. This base, when filled with the ballast material, should weigh between 35 lbs (minimum) and 50 lbs (maximum). The ballast may be sand in one to three sandbags separate from the base, sand in a sand-filled plastic base, or other ballasting devices as approved by the Engineer. Stacking of sandbags will be allowed, however height of sandbags above pavement surface may not exceed 12 inches.
2. Bases with built-in ballast shall weigh between 40 lbs. and 50 lbs. Built-in ballast can be constructed of an integral crumb rubber base or a solid rubber base.
3. Recycled truck tire sidewalls may be used for ballast on drums approved for this type of ballast on the CWZTCD list.
4. The ballast shall not be heavy objects, water, or any material that would become hazardous to motorists, pedestrians, or workers when the drum is struck by a vehicle.
5. When used in regions susceptible to freezing, drums shall have drainage holes in the bottoms so that water will not collect and freeze becoming a hazard when struck by a vehicle.
6. Ballast shall not be placed on top of drums.
7. Adhesives may be used to secure base of drums to pavement.

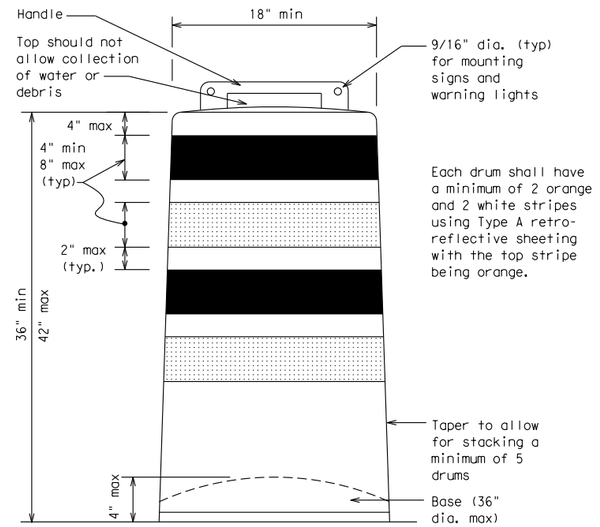

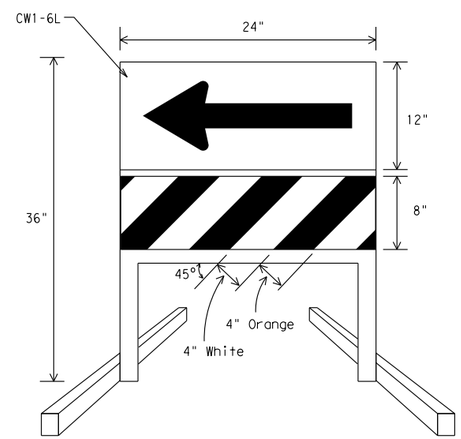

DIRECTION INDICATOR BARRICADE

1. The Direction Indicator Barricade may be used in tapers, transitions, and other areas where specific directional guidance to drivers is necessary.
2. If used, the Direction Indicator Barricade should be used in series to direct the driver through the transition and into the intended travel lane.
3. The Direction Indicator Barricade shall consist of One-Direction Large Arrow (CW1-6) sign in the size shown with a black arrow on a background of Type B_{FL} or Type C_{FL} Orange retroreflective sheeting above a rail with Type A retroreflective sheeting in alternating 4" white and orange stripes sloping downward at an angle of 45 degrees in the direction road users are to pass. Sheeting types shall be as per DMS 8300.
4. Double arrows on the Direction Indicator Barricade will not be allowed.
5. Approved manufacturers are shown on the CWZTCD List. Ballast shall be as approved by the manufacturers instructions.

This detail is not intended for fabrication. See note 3 and the CWZTCD list for providers of approved Detectable Pedestrian Barricades

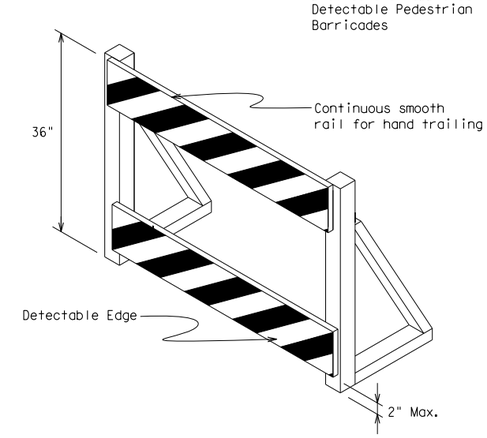

DETECTABLE PEDESTRIAN BARRICADES

1. When existing pedestrian facilities are disrupted, closed, or relocated in a TTC zone, the temporary facilities shall be detectable and include accessibility features consistent with the features present in the existing pedestrian facility.
2. Where pedestrians with visual disabilities normally use the closed sidewalk, a device that is detectable by a person with a visual disability traveling with the aid of a long cane shall be placed across the full width of the closed sidewalk.
3. Detectable pedestrian barricades similar to the one pictured above, longitudinal channelizing devices, some concrete barriers, and wood or chain link fencing with a continuous detectable edging can satisfactorily delineate a pedestrian path.
4. Tape, rope, or plastic chain strung between devices are not detectable, do not comply with the design standards in the "Americans with Disabilities Act Accessibility Guidelines for Buildings and Facilities (ADAAG)" and should not be used as a control for pedestrian movements.
5. Warning lights shall not be attached to detectable pedestrian barricades.
6. Detectable pedestrian barricades may use 8" nominal barricade rails as shown on BC(10) provided that the top rail provides a smooth continuous rail suitable for hand trailing with no splinters, burrs, or sharp edges.

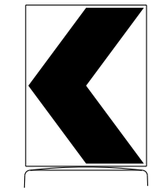

18" x 24" Sign
(Maximum Sign Dimension)
Chevron CW1-8, Opposing Traffic Lane Divider, Driveway sign D70a, Keep Right R4 series or other signs as approved by Engineer

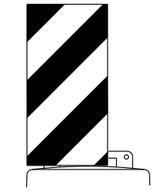

12" x 24"
Vertical Panel
mount with diagonals sloping down towards travel way

Plywood, Aluminum or Metal sign substrates shall NOT be used on plastic drums

SIGNS, CHEVRONS, AND VERTICAL PANELS MOUNTED ON PLASTIC DRUMS

1. Signs used on plastic drums shall be manufactured using substrates listed on the CWZTCD.
2. Chevrons and other work zone signs with an orange background shall be manufactured with Type B_{FL} or Type C_{FL} Orange sheeting meeting the color and retroreflectivity requirements of DMS-8300, "Sign Face Material," unless otherwise specified in the plans.
3. Vertical Panels shall be manufactured with orange and white sheeting meeting the requirements of DMS-8300 Type A Diagonal stripes on Vertical Panels shall slope down toward the intended traveled lane.
4. Other sign messages (text or symbolic) may be used as approved by the Engineer. Sign dimensions shall not exceed 18 inches in width or 24 inches in height, except for the R9 series signs discussed in note 8 below.
5. Signs shall be installed using a 1/2 inch bolt (nominal) and nut, two washers, and one locking washer for each connection.
6. Mounting bolts and nuts shall be fully engaged and adequately torqued. Bolts should not extend more than 1/2 inch beyond nuts.
7. Chevrons may be placed on drums on the outside of curves, on merging tapers or on shifting tapers. When used in these locations they may be placed on every drum or spaced not more than on every third drum. A minimum of three (3) should be used at each location called for in the plans.
8. R9-9, R9-10, R9-11 and R9-11a Sidewalk Closed signs which are 24 inches wide may be mounted on plastic drums, with approval of the Engineer.

Texas Department of Transportation

Traffic Operations Division Standard

BARRICADE AND CONSTRUCTION CHANNELIZING DEVICES

BC(8)-14

FILE: bc-14.dgn	DN: TxDOT	CK: TxDOT	DW: TxDOT	CK: TxDOT
© TxDOT November 2002	CONT	SECT	JOB	HIGHWAY
REVISIONS				
4-03 7-13	DIST		COUNTY	SHEET NO.
9-07 8-14				37 OF 152

DISCLAIMER:
The use of this standard is governed by the "Texas Engineering Practice Act". No warranty of any kind is made by TxDOT for any purpose whatsoever. TxDOT assumes no responsibility for the conversion of this standard to other formats or for incorrect results or damages resulting from its use.

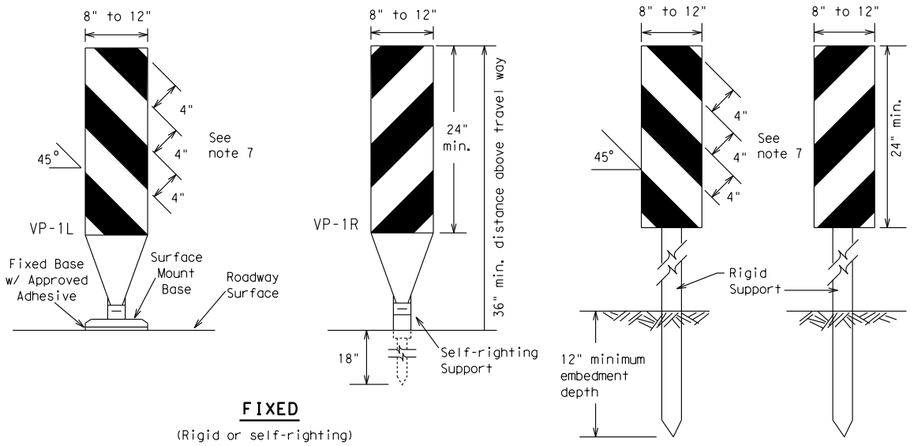

FIXED

(Rigid or self-righting)

DRIVEABLE

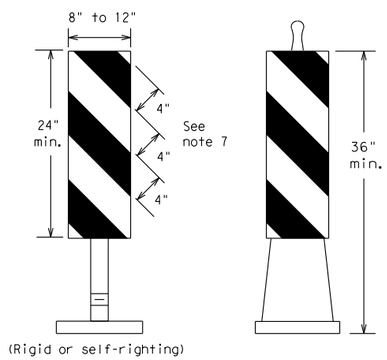

(Rigid or self-righting)

PORTABLE

1. Vertical Panels (VP's) are normally used to channelize traffic or divide opposing lanes of traffic.
2. VP's may be used in daytime or nighttime situations. They may be used at the edge of shoulder drop-offs and other areas such as lane transitions where positive daytime and nighttime delineation is required. The Engineer/Inspector shall refer to the Roadway Design Manual Appendix B "Treatment of Pavement Drop-offs in Work Zones" for additional guidelines on the use of VP's for drop-offs.
3. VP's should be mounted back to back if used at the edge of cuts adjacent to two-way two lane roadways. Stripes are to be reflective orange and reflective white and should always slope downward toward the travel lane.
4. VP's used on expressways and freeways or other high speed roadways, may have more than 270 square inches of retroreflective area facing traffic.
5. Self-righting supports are available with portable base. See "Compliant Work Zone Traffic Control Devices List" (CWZTCD).
6. Sheeting for the VP's shall be retroreflective Type A conforming to Departmental Material Specification DMS-8300, unless noted otherwise.
7. Where the height of reflective material on the vertical panel is 36 inches or greater, a panel stripe of 6 inches shall be used.

VERTICAL PANELS (VPs)

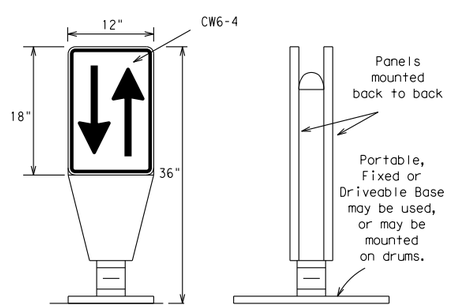

1. Opposing Traffic Lane Dividers (OTLD) are delineation devices designed to convert a normal one-way roadway section to two-way operation. OTLD's are used on temporary centerlines. The upward and downward arrows on the sign's face indicate the direction of traffic on either side of the divider. The base is secured to the pavement with an adhesive or rubber weight to minimize movement caused by a vehicle impact or wind gust.
2. The OTLD may be used in combination with 42" cones or VPs.
3. Spacing between the OTLD shall not exceed 500 feet. 42" cones or VPs placed between the OTLD's should not exceed 100 foot spacing.
4. The OTLD shall be orange with a black non-reflective legend. Sheeting for the OTLD shall be retroreflective Type B_{FL} or Type C_{FL} conforming to Departmental Material Specification DMS-8300, unless noted otherwise. The legend shall meet the requirements of DMS-8300.

OPPOSING TRAFFIC LANE DIVIDERS (OTLD)

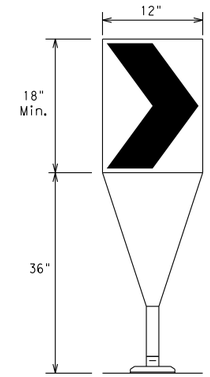

Fixed Base w/ Approved Adhesive (Driveable Base, or Flexible Support can be used)

1. The chevron shall be a vertical rectangle with a minimum size of 12 by 18 inches.
2. Chevrons are intended to give notice of a sharp change of alignment with the direction of travel and provide additional emphasis and guidance for vehicle operators with regard to changes in horizontal alignment of the roadway.
3. Chevrons, when used, shall be erected on the outside of a sharp curve or turn, or on the far side of an intersection. They shall be in line with and at right angles to approaching traffic. Spacing should be such that the motorist always has three in view, until the change in alignment eliminates its need.
4. To be effective, the chevron should be visible for at least 500 feet.
5. Chevrons shall be orange with a black nonreflective legend. Sheeting for the chevron shall be retroreflective Type B_{FL} or Type C_{FL} conforming to Departmental Material Specification DMS-8300, unless noted otherwise. The legend shall meet the requirements of DMS-8300.
6. For Long Term Stationary use on tapers or transitions on freeways and divided highways self-righting chevrons may be used to supplement plastic drums but not to replace plastic drums.

CHEVRONS

GENERAL NOTES

1. Work Zone channelizing devices illustrated on this sheet may be installed in close proximity to traffic and are suitable for use on high or low speed roadways. The Engineer/Inspector shall ensure that spacing and placement is uniform and in accordance with the "Texas Manual on Uniform Traffic Control Devices" (TMUTCD).
2. Channelizing devices shown on this sheet may have a driveable, fixed or portable base. The requirement for self-righting channelizing devices must be specified in the General Notes or other plan sheets.
3. Channelizing devices on self-righting supports should be used in work zone areas where channelizing devices are frequently impacted by errant vehicles or vehicle related wind gusts making alignment of the channelizing devices difficult to maintain. Locations of these devices shall be detailed elsewhere in the plans. These devices shall conform to the TMUTCD and the "Compliant Work Zone Traffic Control Devices List" (CWZTCD).
4. The Contractor shall maintain devices in a clean condition and replace damaged, nonreflective, faded, or broken devices and bases as required by the Engineer/Inspector. The Contractor shall be required to maintain proper device spacing and alignment.
5. Portable bases shall be fabricated from virgin and/or recycled rubber. The portable bases shall weigh a minimum of 30 lbs.
6. Pavement surfaces shall be prepared in a manner that ensures proper bonding between the adhesives, the fixed mount bases and the pavement surface. Adhesives shall be prepared and applied according to the manufacturer's recommendations.
7. The installation and removal of channelizing devices shall not cause detrimental effects to the final pavement surfaces, including pavement surface discoloration or surface integrity. Driveable bases shall not be permitted on final pavement surfaces. The Engineer/Inspector shall approve all application and removal procedures of fixed bases.

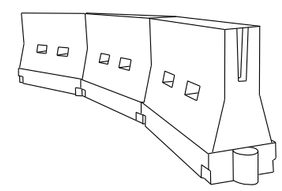

LONGITUDINAL CHANNELIZING DEVICES (LCD)

1. LCDs are crashworthy, lightweight, deformable devices that are highly visible, have good target value and can be connected together. They are not designed to contain or redirect a vehicle on impact.
2. LCDs may be used instead of a line of cones or drums.
3. LCDs shall be placed in accordance to application and installation requirements specific to the device, and used only when shown on the CWZTCD list.
4. LCDs should not be used to provide positive protection for obstacles, pedestrians or workers.
5. LCDs shall be supplemented with retroreflective delineation as required for temporary barriers on BC(7) when placed roughly parallel to the travel lanes.
6. LCDs used as barricades placed perpendicular to traffic should have at least one row of reflective sheeting meeting the requirements for barricade rails as shown on BC(10) placed near the top of the LCD along the full length of the device.

WATER BALLASTED SYSTEMS USED AS BARRIERS

1. Water ballasted systems used as barriers shall not be used solely to channelize road users, but also to protect the work space per the appropriate NCHRP 350 crashworthiness requirements based on roadway speed and barrier application.
2. Water ballasted systems used to channelize vehicular traffic shall be supplemented with retroreflective delineation or channelizing devices to improve daytime/nighttime visibility. They may also be supplemented with pavement markings.
3. Water ballasted systems used as barriers shall be placed in accordance to application and installation requirements specific to the device, and used only when shown on the CWZTCD list.
4. Water ballasted systems used as barriers should not be used for a merging taper except in low speed (less than 45 MPH) urban areas. When used on a taper in a low speed urban area, the taper shall be delineated and the taper length should be designed to optimize road user operations considering the available geometric conditions.
5. When water ballasted systems used as barriers have blunt ends exposed to traffic, they should be attenuated as per manufacturer recommendations or flared to a point outside the clear zone.

If used to channelize pedestrians, longitudinal channelizing devices or water ballasted systems must have a continuous detectable bottom for users of long canes and the top of the unit shall not be less than 32 inches in height.

HOLLOW OR WATER BALLASTED SYSTEMS USED AS LONGITUDINAL CHANNELIZING DEVICES OR BARRIERS

Posted Speed *	Formula	Minimum Desirable Taper Lengths **			Suggested Maximum Spacing of Channelizing Devices	
		10' Offset	11' Offset	12' Offset	On a Taper	On a Tangent
30	$L = \frac{WS^2}{60}$	150'	165'	180'	30'	60'
35		205'	225'	245'	35'	70'
40		265'	295'	320'	40'	80'
45	L = WS	450'	495'	540'	45'	90'
50		500'	550'	600'	50'	100'
55		550'	605'	660'	55'	110'
60		600'	660'	720'	60'	120'
65		650'	715'	780'	65'	130'
70		700'	770'	840'	70'	140'
75		750'	825'	900'	75'	150'
80		800'	880'	960'	80'	160'

** Taper lengths have been rounded off.
L=Length of Taper (FT.) W=Width of Offset (FT.)
S=Posted Speed (MPH)

SUGGESTED MAXIMUM SPACING OF CHANNELIZING DEVICES AND MINIMUM DESIRABLE TAPER LENGTHS

Texas Department of Transportation — Traffic Operations Division Standard

BARRICADE AND CONSTRUCTION CHANNELIZING DEVICES

BC(9)-14

FILE: bc-14.dgn	DN: TxDOT	CK: TxDOT	DW: TxDOT	CK: TxDOT
© TxDOT November 2002	CONT	SECT	JOB	HIGHWAY
REVISIONS 9-07 8-14 7-13	DIST		COUNTY	SHEET NO. 38 OF 152

DATE:
FILE:

TYPE 3 BARRICADES

1. Refer to the Compliant Work Zone Traffic Control Devices List (CWZTCD) for details of the Type 3 Barricades and a list of all materials used in the construction of Type 3 Barricades.
2. Type 3 Barricades shall be used at each end of construction projects closed to all traffic.
3. Barricades extending across a roadway should have stripes that slope downward in the direction toward which traffic must turn in detouring. When both right and left turns are provided, the chevron striping may slope downward in both directions from the center of the barricade. Where no turns are provided at a closed road striping should slope downward in both directions toward the center of roadway.
4. Striping of rails, for the right side of the roadway, should slope downward to the left. For the left side of the roadway, striping should slope downward to the right.
5. Identification markings may be shown only on the back of the barricade rails. The maximum height of letters and/or company logos used for identification shall be 1".
6. Barricades shall not be placed parallel to traffic unless an adequate clear zone is provided.
7. Warning lights shall NOT be installed on barricades.
8. Where barricades require the use of weights to keep from turning over, the use of sandbags with dry, cohesionless sand is recommended. The sandbags will be tied shut to keep the sand from spilling and to maintain a constant weight. Sand bags shall not be stacked in a manner that covers any portion of a barricade rails reflective sheeting. Rock, concrete, iron, steel or other solid objects will NOT be permitted. Sandbags should weigh a minimum of 35 lbs and a maximum of 50 lbs. Sandbags shall be made of a durable material that tears upon vehicular impact. Rubber (such as tire inner tubes) shall not be used for sandbags. Sandbags shall only be placed along or upon the base supports of the device and shall not be suspended above ground level or hung with rope, wire, chains or other fasteners.
9. Sheeting for barricades shall be retroreflective Type A conforming to Departmental Material Specification DMS-8300 unless otherwise noted.

Barricades shall NOT be used as a sign support.

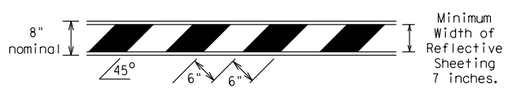

TYPICAL STRIPING DETAIL FOR BARRICADE RAIL

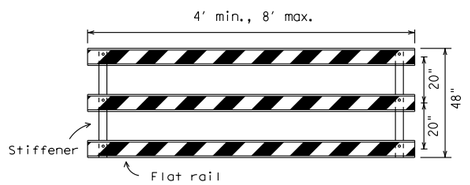

Stiffener may be inside or outside of support, but no more than 2 stiffeners shall be allowed on one barricade.

TYPICAL PANEL DETAIL FOR SKID OR POST TYPE BARRICADES

Each roadway of a divided highway shall be barricaded in the same manner.

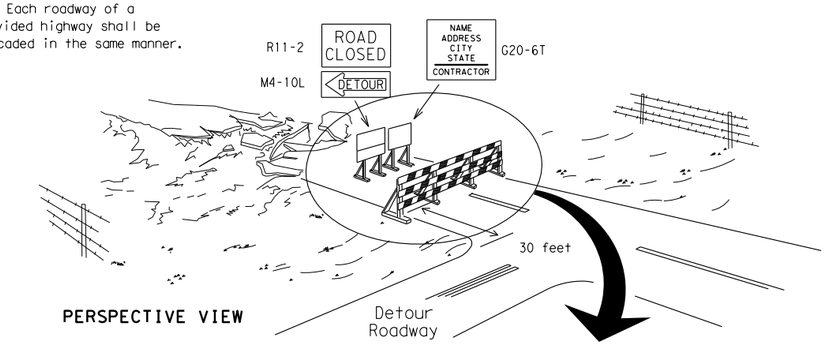

PERSPECTIVE VIEW

The three rails on Type 3 barricades shall be reflectorized orange and reflective white stripes on one side facing one-way traffic and both sides for two-way traffic.

Barricade striping should slant downward in the direction of detour.

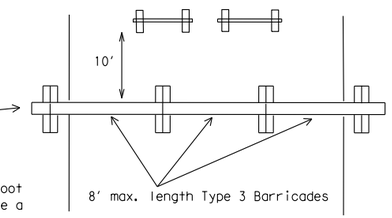

PLAN VIEW

1. Signs should be mounted on independent supports at a 7 foot mounting height in center of roadway. The signs should be a minimum of 10 feet behind Type 3 Barricades.
2. Advance signing shall be as specified elsewhere in the plans.

TYPE 3 BARRICADE (POST AND SKID) TYPICAL APPLICATION

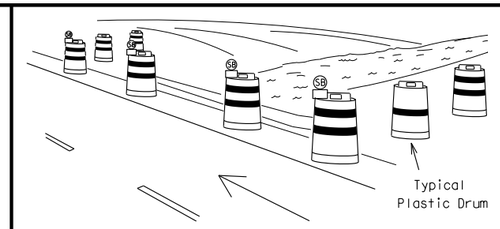

PERSPECTIVE VIEW

1. Where positive redirectional capability is provided, drums may be omitted.
2. Plastic construction fencing may be used with drums for safety as required in the plans.
3. Vertical Panels on flexible support may be substituted for drums when the shoulder width is less than 4 feet.
4. When the shoulder width is greater than 12 feet, steady-burn lights may be omitted if drums are used.
5. Drums must extend the length of the culvert widening.

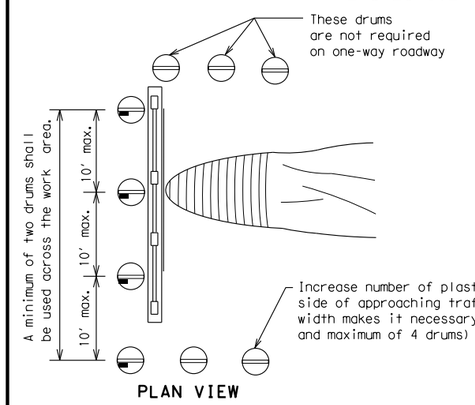

PLAN VIEW

LEGEND	
	Plastic drum
	Plastic drum with steady burn light or yellow warning reflector
SB	Steady burn warning light or yellow warning reflector

CULVERT WIDENING OR OTHER ISOLATED WORK WITHIN THE PROJECT LIMITS

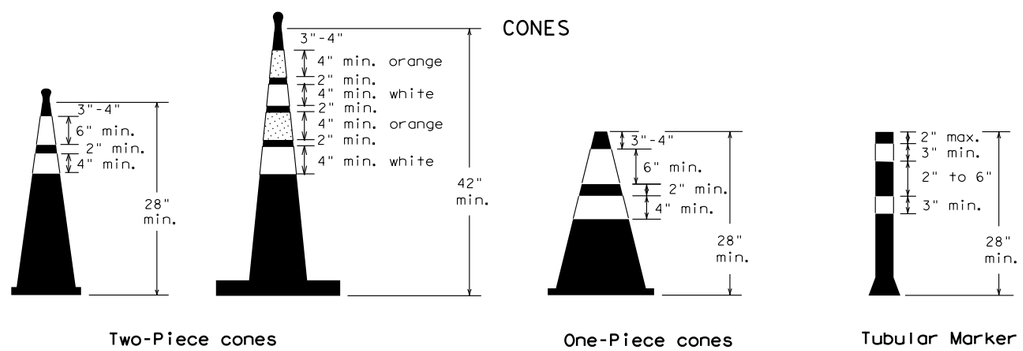

Two-Piece cones

One-Piece cones

Tubular Marker

28" Cones shall have a minimum weight of 9 1/2 lbs.

42" 2-piece cones shall have a minimum weight of 30 lbs. including base.

1. Traffic cones and tubular markers shall be predominantly orange, and meet the height and weight requirements shown above.
2. One-piece cones have the body and base of the cone molded in one consolidated unit. Two-piece cones have a cone shaped body and a separate rubber base, or ballast, that is added to keep the device upright and in place.
3. Two-piece cones may have a handle or loop extending up to 8" above the minimum height shown, in order to aid in retrieving the device.
4. Cones or tubular markers used at night shall have white or white and orange reflective bands as shown above. The reflective bands shall have a smooth, sealed outer surface and meet the requirements of Departmental Material Specification DMS-8300 Type A.
5. 28" cones and tubular markers are generally suitable for short duration and short-term stationary work as defined on BC(4). These should not be used for intermediate-term or long-term stationary work unless personnel is on-site to maintain them in their proper upright position.
6. 42" two-piece cones, vertical panels or drums are suitable for all work zone durations.
7. Cones or tubular markers used on each project should be of the same size and shape.

THIS DEVICE SHALL NOT BE USED ON PROJECTS LET AFTER MARCH 2014.

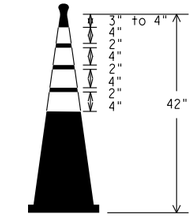

EDGELINE CHANNELIZER

1. This device is intended only for use in place of a vertical panel to channelize traffic by indicating the edge of the travel lane. It is not intended to be used in transitions or tapers.
2. This device shall not be used to separate lanes of traffic (opposing or otherwise) or warn of objects.
3. This device is based on a 42 inch, two-piece cone with an alternate striping pattern: four 4 inch retroreflective bands, with an approximate 2 inch gap between bands. The color of the band should correspond to the color of the edgeline (yellow for left edgeline, white for right edgeline) for which the device is substituted or for which it supplements. The reflectorized bands shall be retroreflective Type A conforming to Departmental Material Specification DMS-8300, unless otherwise noted.
4. The base must weigh a minimum of 30 lbs.

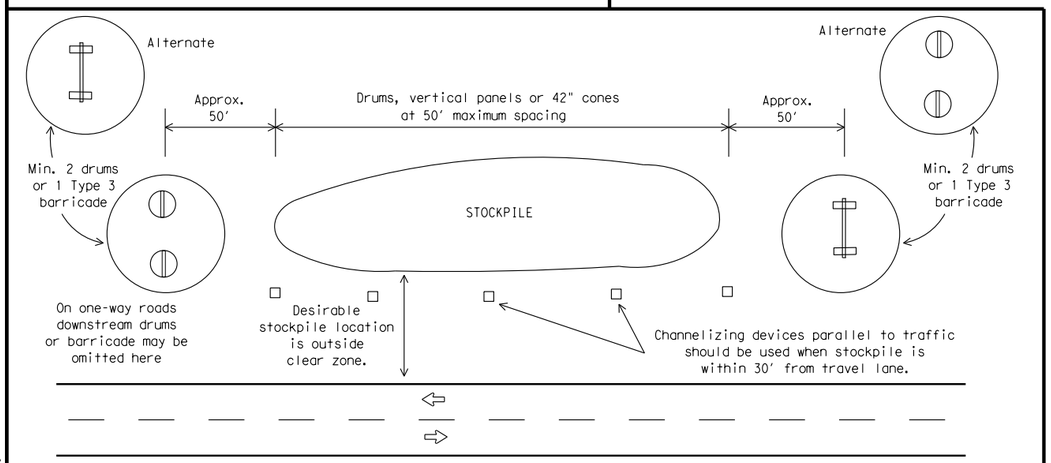

TRAFFIC CONTROL FOR MATERIAL STOCKPILES

DISCLAIMER:
The use of this standard is governed by the "Texas Engineering Practice Act". No warranty of any kind is made by TxDOT for any purpose whatsoever. TxDOT assumes no responsibility for the conversion of this standard to other formats or for incorrect results or damages resulting from its use.

SHEET 10 OF 12

Texas Department of Transportation — Traffic Operations Division Standard

BARRICADE AND CONSTRUCTION CHANNELIZING DEVICES

BC(10)-14

FILE: bc-14.dgn	DN: TxDOT	CK: TxDOT	DW: TxDOT	CK: TxDOT
© TxDOT November 2002	CONT	SECT	JOB	HIGHWAY
REVISIONS 9-07 8-14 7-13	DIST		COUNTY	SHEET NO. 39 OF 152

DATE:
FILE:

DISCLAIMER:
The use of this standard is governed by the "Texas Engineering Practice Act". No warranty of any kind is made by TxDOT for any purpose whatsoever. TxDOT assumes no responsibility for the conversion of this standard to other formats or for incorrect results or damages resulting from its use.

WORK ZONE PAVEMENT MARKINGS

GENERAL

1. The Contractor shall be responsible for maintaining work zone and existing pavement markings, in accordance with the standard specifications and special provisions, on all roadways open to traffic within the CSJ limits unless otherwise stated in the plans.
2. Color, patterns and dimensions shall be in conformance with the "Texas Manual on Uniform Traffic Control Devices" (TMUTCD).
3. Additional supplemental pavement marking details may be found in the plans or specifications.
4. Pavement markings shall be installed in accordance with the TMUTCD and as shown on the plans.
5. When short term markings are required on the plans, short term markings shall conform with the TMUTCD, the plans and details as shown on the Standard Plan Sheet WZ(STPM).
6. When standard pavement markings are not in place and the roadway is opened to traffic, DO NOT PASS signs shall be erected to mark the beginning of the sections where passing is prohibited and PASS WITH CARE signs at the beginning of sections where passing is permitted.
7. All work zone pavement markings shall be installed in accordance with Item 662, "Work Zone Pavement Markings."

RAISED PAVEMENT MARKERS

1. Raised pavement markers are to be placed according to the patterns on BC(12).
2. All raised pavement markers used for work zone markings shall meet the requirements of Item 672, "RAISED PAVEMENT MARKERS" and Departmental Material Specification DMS-4200 or DMS-4300.

PREFABRICATED PAVEMENT MARKINGS

1. Removable prefabricated pavement markings shall meet the requirements of DMS-8241.
2. Non-removable prefabricated pavement markings (foil back) shall meet the requirements of DMS-8240.

MAINTAINING WORK ZONE PAVEMENT MARKINGS

1. The Contractor will be responsible for maintaining work zone pavement markings within the work limits.
2. Work zone pavement markings shall be inspected in accordance with the frequency and reporting requirements of work zone traffic control device inspections as required by Form 599.
3. The markings should provide a visible reference for a minimum distance of 300 feet during normal daylight hours and 160 feet when illuminated by automobile low-beam headlights at night, unless sight distance is restricted by roadway geometrics.
4. Markings failing to meet this criteria within the first 30 days after placement shall be replaced at the expense of the Contractor as per Specification Item 662.

REMOVAL OF PAVEMENT MARKINGS

1. Pavement markings that are no longer applicable, could create confusion or direct a motorist toward or into the closed portion of the roadway shall be removed or obliterated before the roadway is opened to traffic.
2. The above shall not apply to detours in place for less than three days, where flaggers and/or sufficient channelizing devices are used in lieu of markings to outline the detour route.
3. Pavement markings shall be removed to the fullest extent possible, so as not to leave a discernable marking. This shall be by any method approved by TxDOT Specification Item 677 for "Eliminating Existing Pavement Markings and Markers".
4. The removal of pavement markings may require resurfacing or seal coating portions of the roadway as described in Item 677.
5. Subject to the approval of the Engineer, any method that proves to be successful on a particular type pavement may be used.
6. Blast cleaning may be used but will not be required unless specifically shown in the plans.
7. Over-painting of the markings SHALL NOT BE permitted.
8. Removal of raised pavement markers shall be as directed by the Engineer.
9. Removal of existing pavement markings and markers will be paid for directly in accordance with Item 677, "ELIMINATING EXISTING PAVEMENT MARKINGS AND MARKERS," unless otherwise stated in the plans.
10. Black-out marking tape may be used to cover conflicting existing markings for periods less than two weeks when approved by the Engineer.

Temporary Flexible-Reflective Roadway Marker Tabs

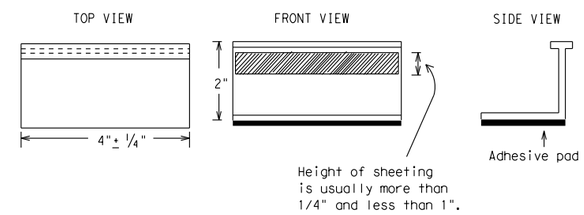

STAPLES OR NAILS SHALL NOT BE USED TO SECURE TEMPORARY FLEXIBLE-REFLECTIVE ROADWAY MARKER TABS TO THE PAVEMENT SURFACE

1. Temporary flexible-reflective roadway marker tabs used as guidemarks shall meet the requirements of DMS-8242.
2. Tabs detailed on this sheet are to be inspected and accepted by the Engineer or designated representative. Sampling and testing is not normally required, however at the option of the Engineer, either "A" or "B" below may be imposed to assure quality before placement on the roadway.
   A. Select five (5) or more tabs at random from each lot or shipment and submit to the Construction Division, Materials and Pavement Section to determine specification compliance.
   B. Select five (5) tabs and perform the following test. Affix five (5) tabs at 24 inch intervals on an asphaltic pavement in a straight line. Using a medium size passenger vehicle or pickup, run over the markers with the front and rear tires at a speed of 35 to 40 miles per hour, four (4) times in each direction. No more than one (1) out of the five (5) reflective surfaces shall be lost or displaced as a result of this test.
3. Small design variances may be noted between tab manufacturers.
4. See Standard Sheet WZ(STPM) for tab placement on new pavements. See Standard Sheet TCP(7-1) for tab placement on seal coat work.

RAISED PAVEMENT MARKERS USED AS GUIDEMARKS

1. Raised pavement markers used as guidemarks shall be from the approved product list, and meet the requirements of DMS-4200.
2. All temporary construction raised pavement markers provided on a project shall be of the same manufacturer.
3. Adhesive for guidemarks shall be bituminous material hot applied or butyl rubber pad for all surfaces, or thermoplastic for concrete surfaces.

Guidemarks shall be designated as:
YELLOW - (two amber reflective surfaces with yellow body).
WHITE - (one silver reflective surface with white body).

DEPARTMENTAL MATERIAL SPECIFICATIONS	
PAVEMENT MARKERS (REFLECTORIZED)	DMS-4200
TRAFFIC BUTTONS	DMS-4300
EPOXY AND ADHESIVES	DMS-6100
BITUMINOUS ADHESIVE FOR PAVEMENT MARKERS	DMS-6130
PERMANENT PREFABRICATED PAVEMENT MARKINGS	DMS-8240
TEMPORARY REMOVABLE, PREFABRICATED PAVEMENT MARKINGS	DMS-8241
TEMPORARY FLEXIBLE, REFLECTIVE ROADWAY MARKER TABS	DMS-8242

A list of prequalified reflective raised pavement markers, non-reflective traffic buttons, roadway marker tabs and other pavement markings can be found at the Material Producer List web address shown on BC(1).

Texas Department of Transportation — Traffic Operations Division Standard

BARRICADE AND CONSTRUCTION PAVEMENT MARKINGS

BC(11)-14

FILE: bc-14.dgn	DN: TxDOT	CK: TxDOT	DW: TxDOT	CK: TxDOT
© TxDOT February 1998	CONT	SECT	JOB	HIGHWAY
REVISIONS 2-98 9-07, 1-02 7-13, 11-02 8-14	DIST	COUNTY		SHEET NO. 40 OF 152

DATE:
FILE:

PAVEMENT MARKING PATTERNS

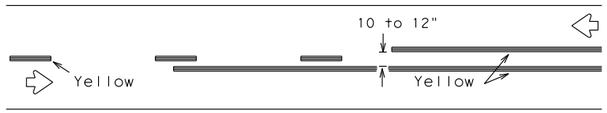

REFLECTORIZED PAVEMENT MARKINGS - PATTERN A

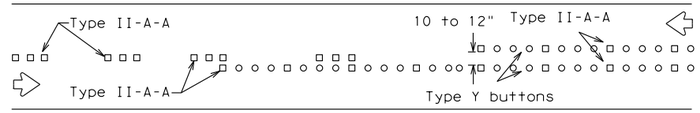

RAISED PAVEMENT MARKERS - PATTERN A

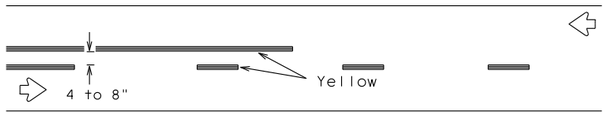

REFLECTORIZED PAVEMENT MARKINGS - PATTERN B

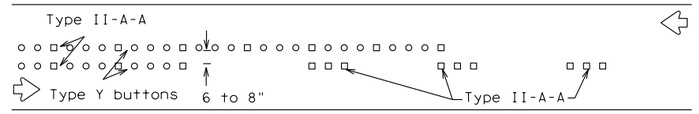

RAISED PAVEMENT MARKERS - PATTERN B

Pattern A is the TXDOT Standard, however Pattern B may be used if approved by the Engineer.
Prefabricated markings may be substituted for reflectorized pavement markings.

CENTER LINE & NO-PASSING ZONE BARRIER LINES FOR TWO-LANE, TWO-WAY HIGHWAYS

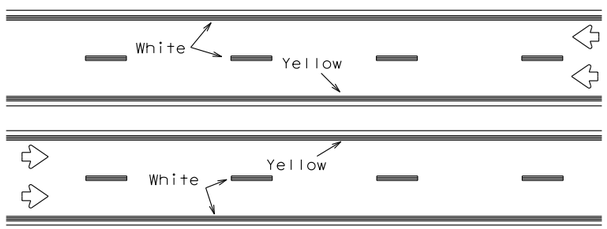

REFLECTORIZED PAVEMENT MARKINGS

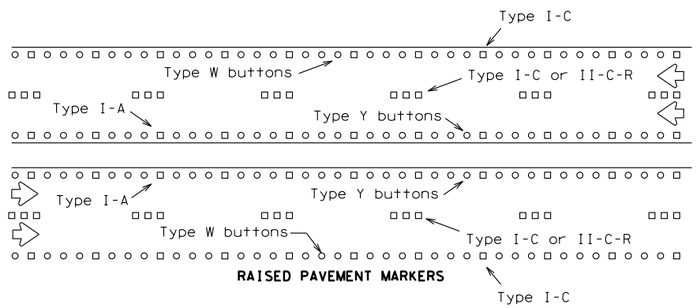

RAISED PAVEMENT MARKERS

Prefabricated markings may be substituted for reflectorized pavement markings.

EDGE & LANE LINES FOR DIVIDED HIGHWAY

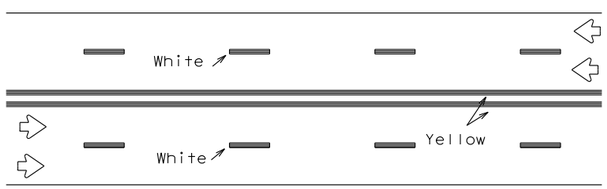

REFLECTORIZED PAVEMENT MARKINGS

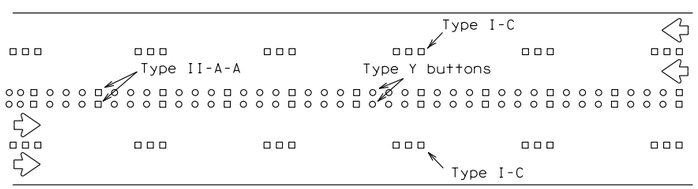

RAISED PAVEMENT MARKERS

Prefabricated markings may be substituted for reflectorized pavement markings.

LANE & CENTER LINES FOR MULTILANE UNDIVIDED HIGHWAYS

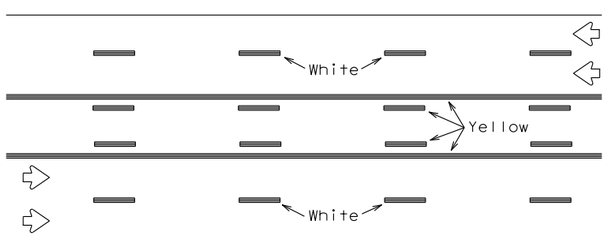

REFLECTORIZED PAVEMENT MARKINGS

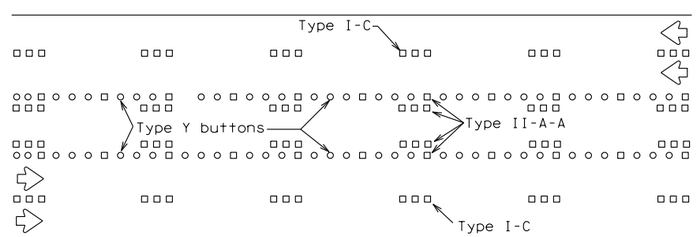

RAISED PAVEMENT MARKERS

Prefabricated markings may be substituted for reflectorized pavement markings.

TWO-WAY LEFT TURN LANE

STANDARD WORK ZONE PAVEMENT MARKINGS DETAILS

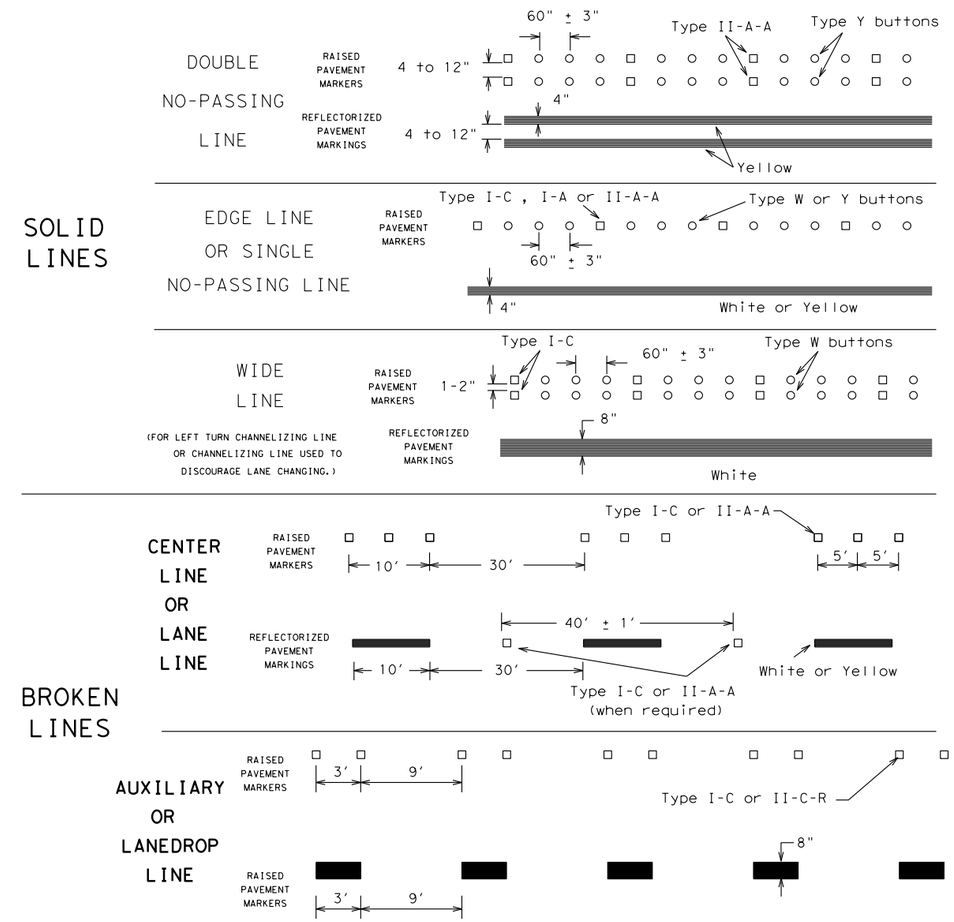

REMOVABLE MARKINGS WITH RAISED PAVEMENT MARKERS

If raised pavement markers are used to supplement REMOVABLE markings, the markers shall be applied to the top of the tape at the approximate mid length of tape used for broken lines or at 20 foot spacing for solid lines. This allows an easier removal of raised pavement markers and tape.

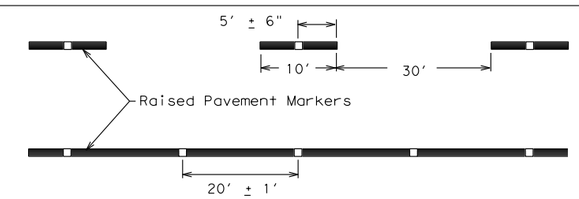

Centerline only - not to be used on edge lines

SHEET 12 OF 12

Raised pavement markers used as standard pavement markings shall be from the approved products list and meet the requirements of Item 672 "RAISED PAVEMENT MARKERS."

Texas Department of Transportation — Traffic Operations Division Standard

BARRICADE AND CONSTRUCTION PAVEMENT MARKING PATTERNS

BC(12)-14

FILE: bc-14.dgn	DN: TxDOT	CK: TxDOT	DW: TxDOT	CK: TxDOT
© TxDOT February 1998	CONT	SECT	JOB	HIGHWAY
REVISIONS 1-97 9-07				
2-98 7-13	DIST	COUNTY		SHEET NO.
11-02 8-14				41 OF 152

106

DISCLAIMER:
The use of this standard is governed by the "Texas Engineering Practice Act". No warranty of any kind is made by TxDOT for any purpose whatsoever. TxDOT assumes no responsibility for the conversion of this standard to other formats or for incorrect results or damages resulting from its use.

DATE:
FILE:

DISCLAIMER:
The use of this standard is governed by the "Texas Engineering Practice Act". No warranty of any kind is made by TxDOT for any purpose whatsoever. TxDOT assumes no responsibility for the conversion of this standard to other formats or for incorrect results or damages resulting from its use.

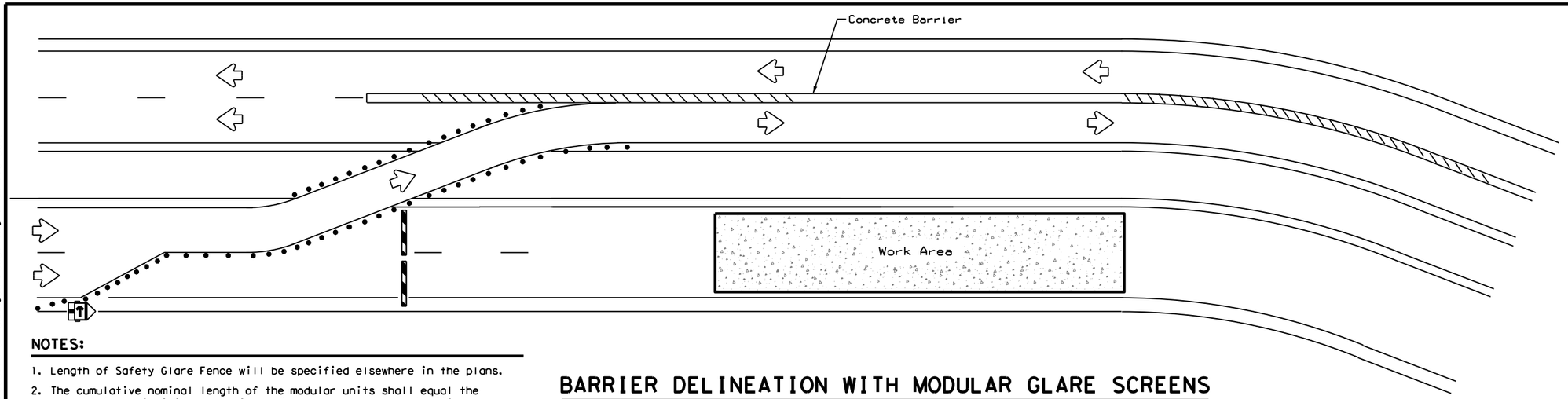

LEGEND	
	Type 3 Barricade
• • •	Channelizing Devices
	Trailer Mounted Flashing Arrow Board
	Sign
\\\\	Safety glare fence

BARRIER DELINEATION WITH MODULAR GLARE SCREENS

NOTES:

1. Length of Safety Glare Fence will be specified elsewhere in the plans.
2. The cumulative nominal length of the modular units shall equal the length of the individual sections of temporary concrete traffic barrier on which they are installed so the joint between barrier sections will not be spanned by any one unit.
3. Panel/blades will be designed such that reflective sheeting conforming with Departmental Material Specification DMS-8300, Sign Face Materials, Type B or C Yellow, minimum size of 2 inches by 12 inches can be attached to the edge of the panel/blade. The sheeting shall be attached to one panel/blade per section of concrete barrier not to exceed a spacing of 30 feet. Barrier reflectors are not necessary when panel/blades are installed with reflective sheeting as described.
4. Payment for these devices will be under statewide Special Specification "Modular Glare Screens for Headlight Barrier."
5. This detail is only intended to show types of locations where Glare Screens would be appropriate. Required signing and other devices shall be as shown elsewhere in the plans.

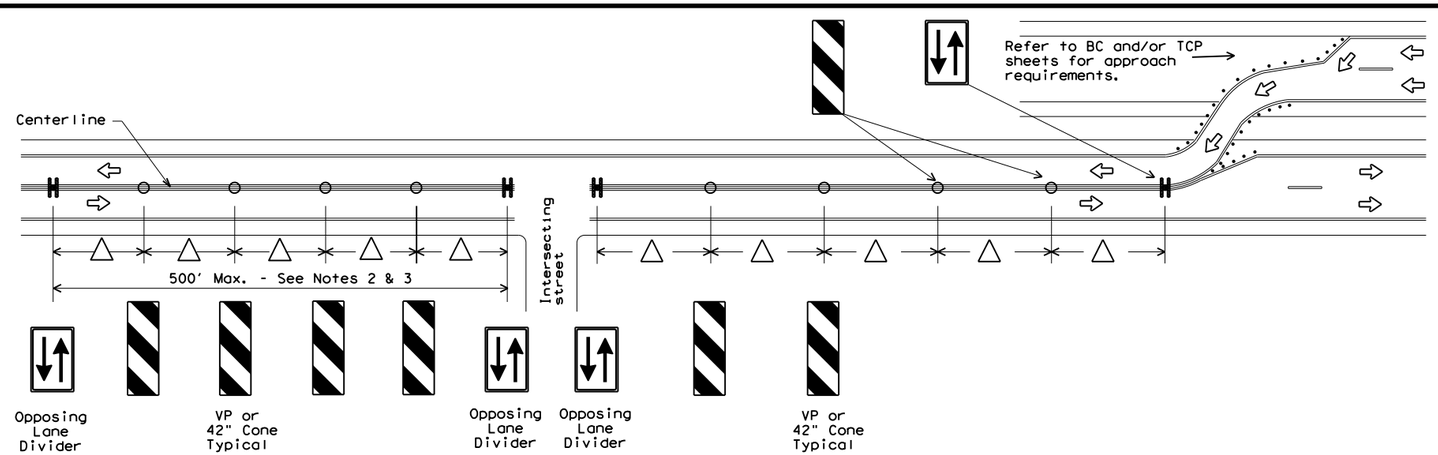

VERTICAL PANELS & OPPOSING TRAFFIC LANE DIVIDERS (OTLD) SEPARATING TWO-WAY TRAFFIC ON NORMALLY DIVIDED HIGHWAYS

NOTES:

1. When two-lane, two way traffic control must be maintained on one roadway of a normally divided highway, opposing traffic shall be separated with either temporary traffic barriers, channelizing devices, or a temporary raised island throughout the length of the two way operation. The above Typical Application is intended to show the appropriate application of channelizing devices when they are used for this purpose. This is not a traffic control plan. If this detail is to be used for other types of roads or applications, those locations should be stated elsewhere in the plans.
2. △ Space devices according to the Tangent Spacing shown on the Device Spacing table on BC(9) but not exceeding 100'.
3. Every fifth device should be an OTLD except when spaced closer to accommodate an intersection. An OTLD should be the first device on each side of intersecting streets or roads.
4. Locations where surface mount bases with adhesives or self-righting devices will be required in order to maintain them in their proper position should be noted elsewhere in the plans.

DEPARTMENTAL MATERIAL SPECIFICATIONS	
SIGN FACE MATERIALS	DMS-8300
DELINEATORS AND OBJECT MARKERS	DMS-8600
MODULAR GLARE SCREENS FOR HEADLIGHT BARRIER	DMS-8610

Only pre-qualified products shall be used. A copy of the "Compliant Work Zone Traffic Control Devices List" (CWZTCD) describes pre-qualified products and their sources and may be found at the following web address:
http://www.txdot.gov/txdot_library/publications/construction.htm

Texas Department of Transportation — Traffic Operations Division Standard

TRAFFIC CONTROL PLAN TYPICAL DETAILS

WZ(TD)-13

FILE: wztd-13.dgn	DN: TxDOT	CK: TxDOT	DW: TxDOT	CK: TxDOT
© TxDOT February 1998	CONT	SECT	JOB	HIGHWAY
REVISIONS 4-98 3-03 7-13	DIST		COUNTY	SHEET NO. 42 OF 152

DATE:
FILE:

110

DISCLAIMER:
The use of this standard is governed by the "Texas Engineering Practice Act". No warranty of any kind is made by TxDOT for any purpose whatsoever. TxDOT assumes no responsibility for the conversion of this standard to other formats or for incorrect results or damages resulting from its use.

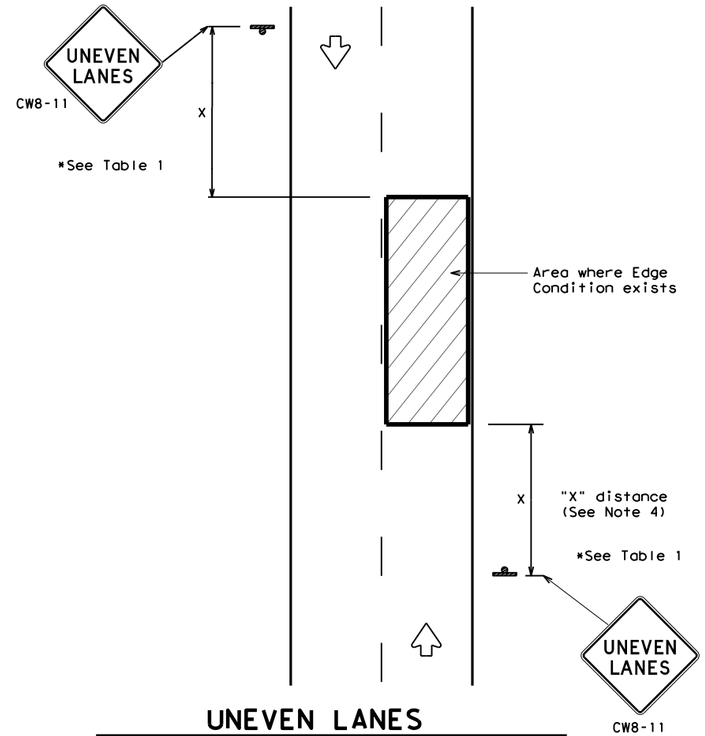

UNEVEN LANES
TWO LANE CONVENTIONAL ROAD

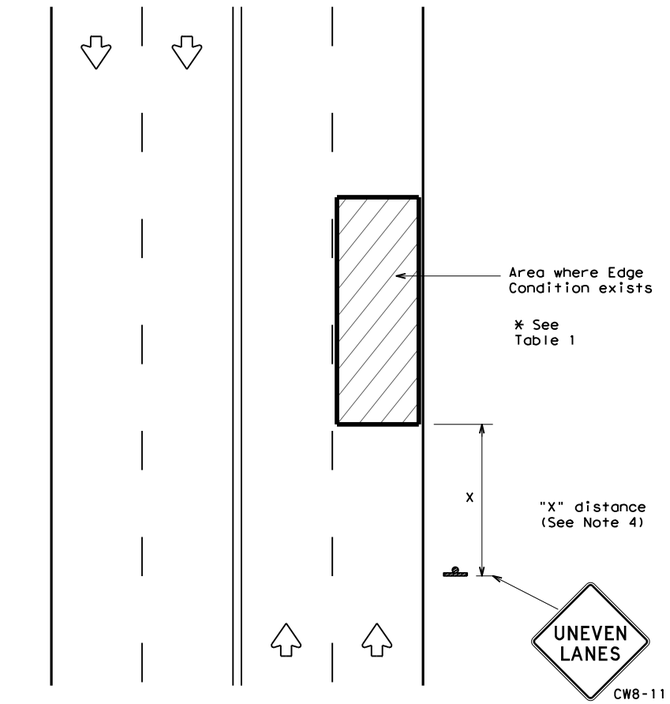

UNEVEN LANES
FOUR LANE CONVENTIONAL ROAD

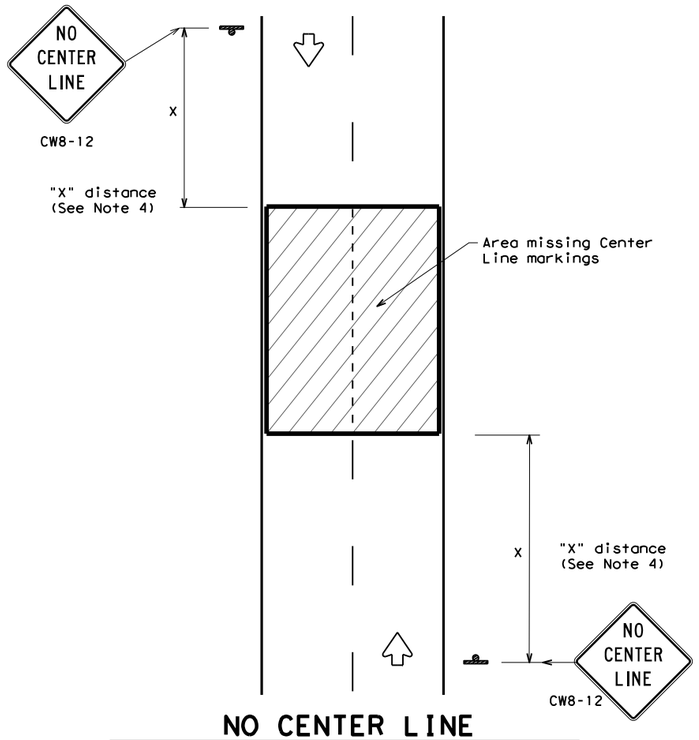

NO CENTER LINE
TWO LANE CONVENTIONAL ROAD

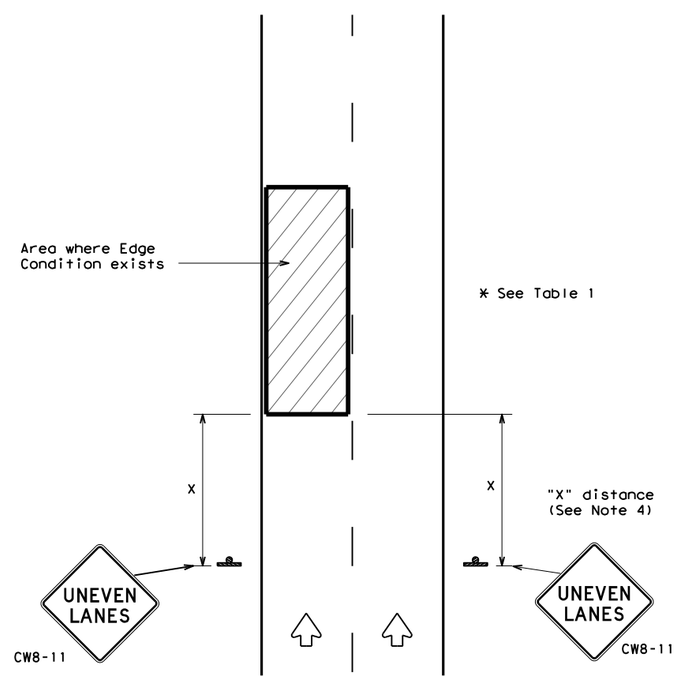

UNEVEN LANES
DIVIDED ROADWAY

DEPARTMENTAL MATERIAL SPECIFICATIONS	
PERMANENT PREFABRICATED PAVEMENT MARKINGS	DMS-8240
TEMPORARY (REMOVABLE) PREFABRICATED PAVEMENT MARKINGS	DMS-8241
SIGN FACE MATERIALS	DMS-8300

COLOR	USAGE	SHEETING MATERIAL
ORANGE	BACKGROUND	TYPE B_{FL} OR TYPE C_{FL} SHEETING
BLACK	LEGEND & BORDERS	ACRYLIC NON-REFLECTIVE SHEETING

GENERAL NOTES

1. If spalling or holes occur, ROUGH ROAD (CW8-8) signs should be placed in advance of the condition and be repeated every two miles where the condition persists.
2. UNEVEN LANES (CW8-11) signs shall be installed in advance of the condition and repeated every mile. Signs installed along the uneven lane condition may be supplemented with the NEXT XX MILES (CW7-3aP) plaque or Advisory Speed (CW13-1P) plaque.
3. NO CENTER LINE (CW8-12) signs and temporary pavement markings as per the WZ(STPM) standard shall be installed if yellow centerlines separating two way traffic are obscured or obliterated. Repeat NO CENTER LINE signs every two miles where the center line markings are not in place. The signs and markings shall remain in place until permanent pavement markings are installed.
4. Signs shall be spaced at the distances recommended as per BC standards.
5. Additional signs may be required as directed by the Engineer. Signs shall remain in place until final surface is applied. Signs shall be considered subsidiary to Item 502 "BARRICADES, SIGNS AND TRAFFIC HANDLING."
6. Signs shall be fabricated and mounted on supports as shown on the BC standards and/or listed on the "Compliant Work Zone Traffic Control Devices" list.
7. Short term markings shall not be used to simulate edge lines.
8. All signs shall be constructed in accordance with the details found in the "Standard Highway Sign Designs for Texas," latest edition.

TABLE 1

Edge Condition	Edge Height (D)	* Warning Devices
① 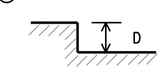	Less than or equal to: 1¼" (maximum-planing) 1½" (typical-overlay)	Sign: CW8-11
	Distance "D" may be a maximum of 1 1/4 " for planing operations and 2" for overlay operations if uneven lanes with edge condition 1 are open to traffic after work operations cease.	
② 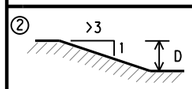	Less than or equal to 3"	Sign: CW8-11
③ 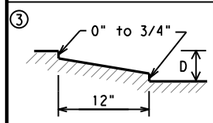 Notched Wedge Joint	Distance "D" may be a maximum of 3" if uneven lanes with edge condition 2 or 3 are open to traffic after work operations cease. Uneven lanes should not be open to traffic when "D" is greater than 3".	

TRAFFIC CONTROL DURING PLANING, OVERLAY AND LEVELING OPERATIONS ARE SHOWN ELSEWHERE IN THE PLANS.

MINIMUM WARNING SIGN SIZE	
Conventional roads	36" x 36"
Freeways/expressways, divided roadways	48" x 48"

Texas Department of Transportation

Traffic Operations Division Standard

SIGNING FOR UNEVEN LANES

WZ(UL)-13

FILE: wzul-13.dgn	DN: TxDOT	CK: TxDOT	DW: TxDOT	CK: TxDOT
©TxDOT April 1992	CONT	SECT	JOB	HIGHWAY
REVISIONS				
8-95 2-98 7-13	DIST		COUNTY	SHEET NO.
1-97 3-03				43 OF 152

DATE:
FILE:

112

DISCLAIMER:
The use of this standard is governed by the "Texas Engineering Practice Act". No warranty of any kind is made by TxDOT for any purpose whatsoever. TxDOT assumes no responsibility for the conversion of this standard to other formats or for incorrect results or damages resulting from its use.

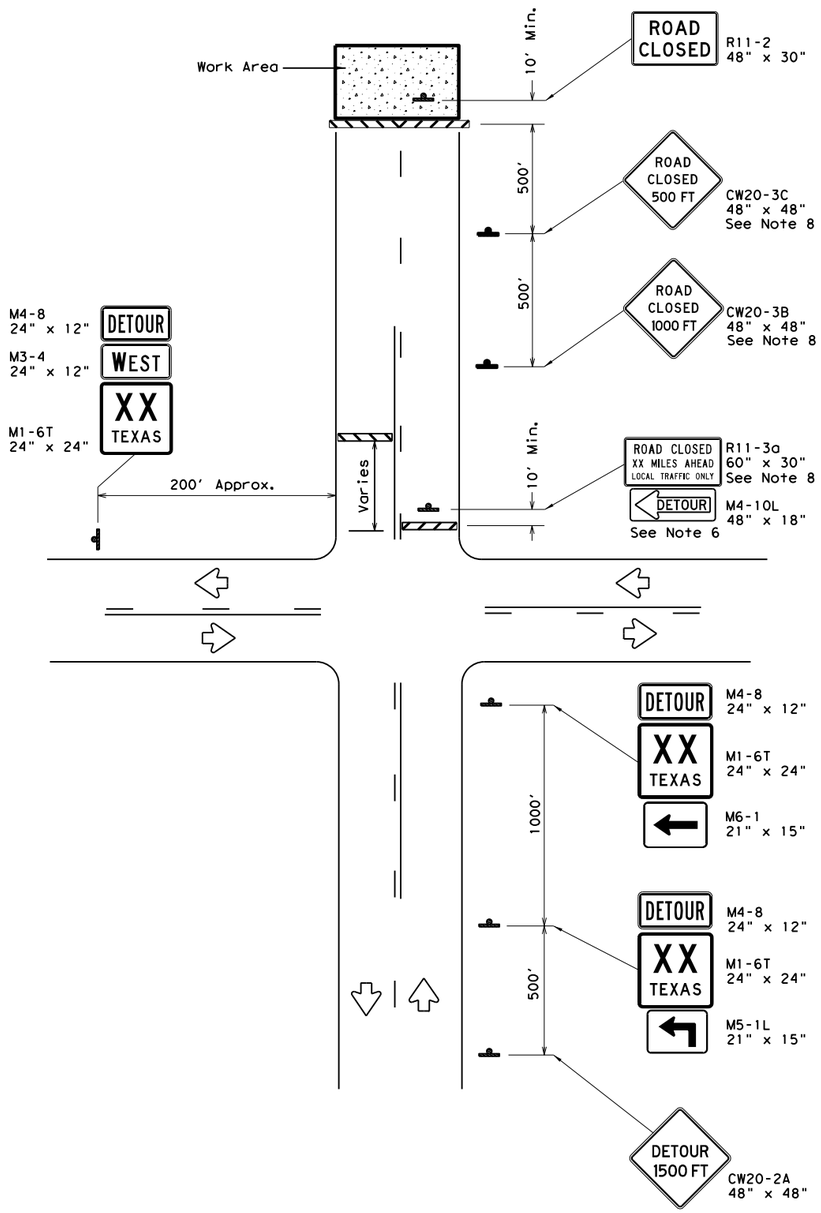

ROAD CLOSURE BEYOND THE INTERSECTION

Signing for a Numbered Route with an Off-Site Detour

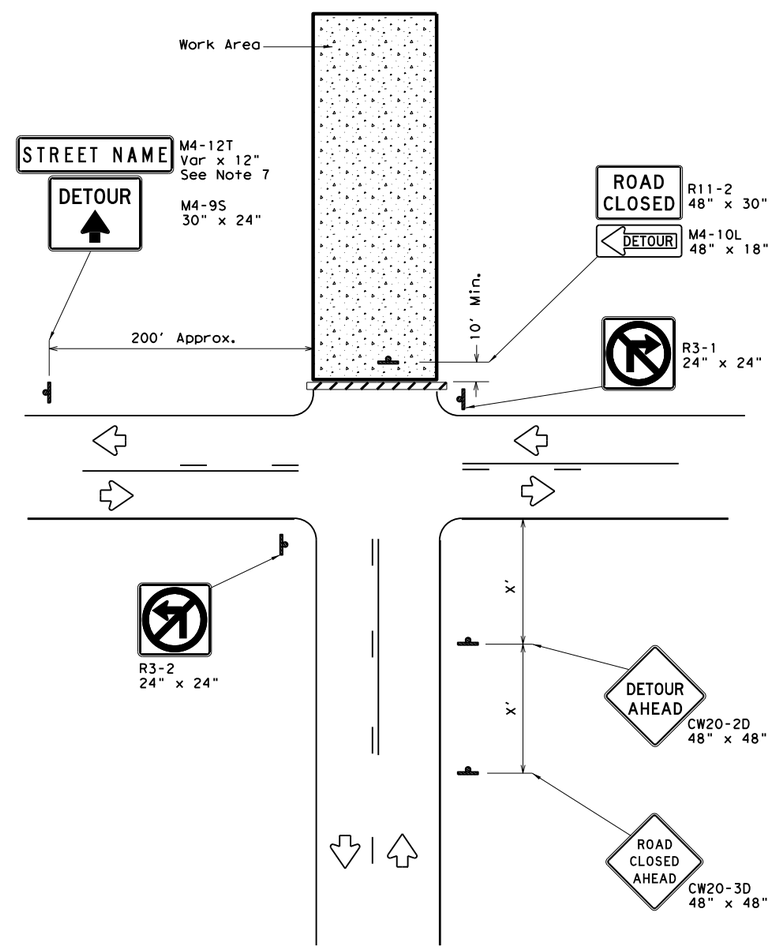

ROAD CLOSURE AT THE INTERSECTION

Signing for an Un-numbered Route with an Off-Site Detour

LEGEND	
	Type 3 Barricade
	Sign

Posted Speed *	Minimum Sign Spacing "X" Distance
30	120'
35	160'
40	240'
45	320'
50	400'
55	500'
60	600'
65	700'
70	800'
75	900'

* Conventional Roads Only

GENERAL NOTES

1. This sheet is intended to provide details for temporary work zone road closures. For permanent road closure details see the D&OM standards.
2. Barricades used shall meet the requirements shown on Barricade and Construction Standard BC(10) and listed on the Compliant Work Zone Traffic Control Devices list (CWZTCD).
3. Stockpiled materials shall not be placed on the traffic side of barricades.
4. Barricades at the road closure should extend from pavement edge to pavement edge.
5. Detour signing shown is intended to illustrate the type of signing that is appropriate for numbered routes or un-numbered routes as labeled. It does not indicate the full extent of detour signing required. Detour routes should be signed as shown elsewhere in the plans.
6. If the road is open for a significant distance beyond the intersection or there are significant origin/destination points beyond the intersection, the signs and barricades at this location should be located at the edge of the traveled way.
7. The Street Name (M4-12T) sign is to be placed above the DETOUR (M4-9S) sign.
8. For urban areas where there is a shorter distance between the intersection and the actual closure location, the ROAD CLOSED XX MILES AHEAD (R11-3a) sign may be replaced with a ROAD CLOSED TO THRU TRAFFIC (R11-4) sign. If adequate space does not exist between the intersection and the closure a single ROAD CLOSED AHEAD (CW20-3D) sign spaced as per the table above may replace the ROAD CLOSED 1000 FT (CW20-3B) and ROAD CLOSED 500 FT (CW20-3C) signs.
9. Signs and barricades shown shall be subsidiary to Item 502. Locations where these details will be required shall be as shown elsewhere in the plans.

Texas Department of Transportation

Traffic Operations Division Standard

WORK ZONE ROAD CLOSURE DETAILS

WZ(RCD)-13

FILE: wzrcd-13.dgn	DN: TxDOT	CK: TxDOT	DW: TxDOT	CK: TxDOT
©TxDOT August 1995	CONT	SECT	JOB	HIGHWAY
REVISIONS				
1-97 4-98 7-13	DIST	COUNTY		SHEET NO.
2-98 3-03				44 OF 152

DATE:
FILE:

DISCLAIMER:
The use of this standard is governed by the "Texas Engineering Practice Act". No warranty of any kind is made by TxDOT for any purpose whatsoever. TxDOT assumes no responsibility for the conversion of this standard to other formats or for incorrect results or damages resulting from its use.

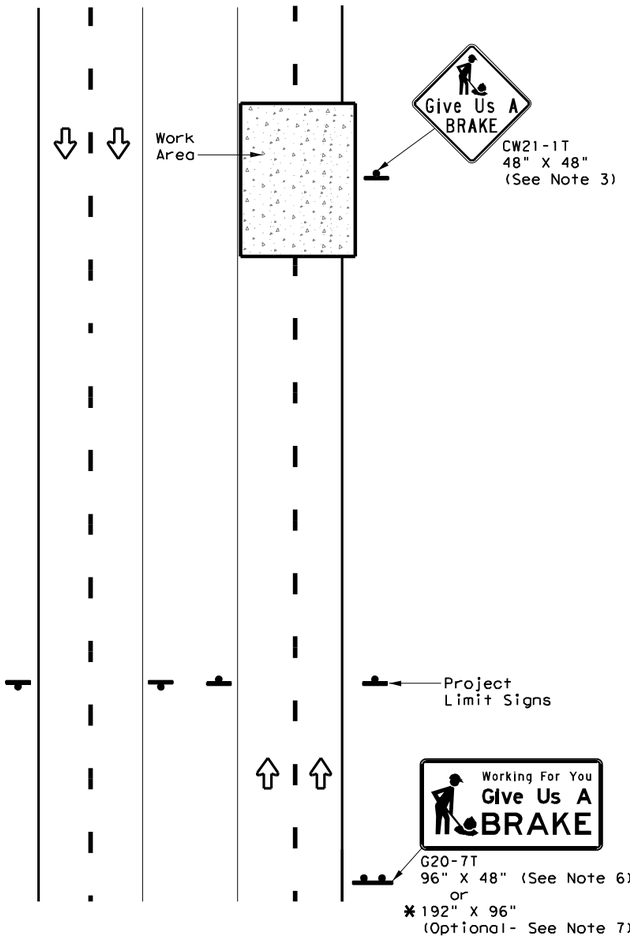

DIVIDED HIGHWAY

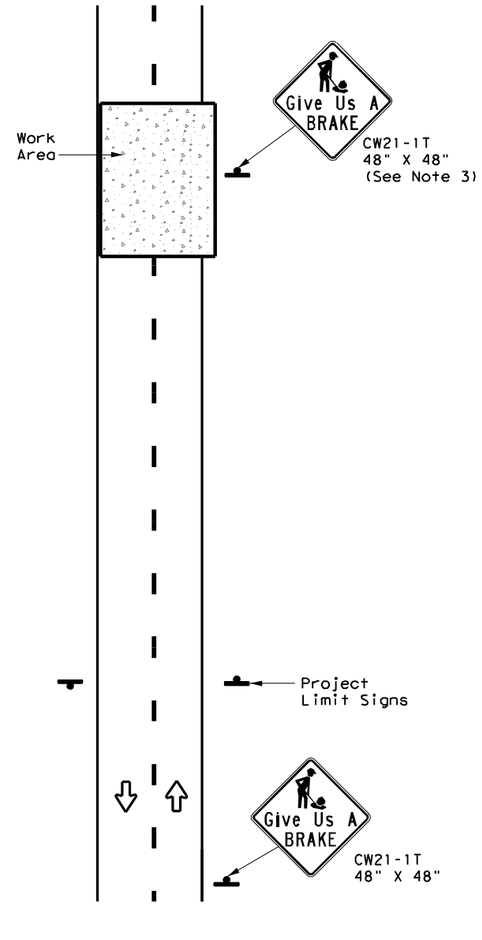

UNDIVIDED HIGHWAY

SIGNS ARE SHOWN FOR ONE DIRECTION OF TRAVEL

* When the optional larger WORKING FOR YOU GIVE US A BRAKE (G20-7T) 192" x 96" sign is required, the locations shall be noted elsewhere in the plans.

SUMMARY OF LARGE SIGNS

BACKGROUND COLOR	SIGN DESIGNATION	SIGN	SIGN DIMENSIONS	REFLECTIVE SHEETING	SQ FT	GALVANIZED STRUCTURAL STEEL Size	GALVANIZED STRUCTURAL STEEL (LF) ①	GALVANIZED STRUCTURAL STEEL (LF) ②	DRILLED SHAFT 24" DIA. (LF)
Orange	G20-7T	Working For You Give Us A BRAKE	96" X 48"	Type B_{FL} or C_{FL}	32	▲	▲	▲	▲
Orange	G20-7T	Working For You Give Us A BRAKE	192" X 96"	Type B_{FL} or C_{FL}	128	W8x18	16	17	12

▲ See Note 6 Below

LEGEND	
	Sign
	Large Sign
	Traffic Flow

DEPARTMENTAL MATERIAL SPECIFICATIONS	
PLYWOOD SIGN BLANKS	DMS-7100
ALUMINUM SIGN BLANKS	DMS-7110
SIGN FACE MATERIALS	DMS-8300

COLOR	USAGE	SHEETING MATERIAL
ORANGE	BACKGROUND	TYPE B_{FL} OR TYPE C_{FL}
BLACK	LEGEND & BORDERS	NON-REFLECTIVE ACRYLIC FILM

GENERAL NOTES

1. See BC and SMD sheets for additional sign support details.
2. Sign locations shall be approved by the Engineer.
3. For projects more than two miles in length, Give Us a BRAKE signs should be repeated halfway through the project. The Give Us a Brake (CW21-1T) may be used for this purpose.
4. Work zone speed limits are sometimes used in conjunction with GIVE US A BRAKE signing. See BC(3) for location and spacing of construction speed zone signing when required.
5. Give Us a Brake (CW21-1T) signs and supports shall be considered subsidiary to Item 502, "Barricades, Signs and Traffic Handling."
6. The 96" X 48" Working For You Give Us A BRAKE (G20-7T) may use a 1/2" or 5/8" plywood substrate or 0.125" aluminum sheeting substrate and may be supported by two 4" x 6" wood posts with drilled holes for breakaway as per BC(5) and will be subsidiary to Item 502.
7. The Working For You Give Us A BRAKE (G20-7T) 192" X 96" sign shall be paid for under the following specification items:
   Item 636 - Aluminum Signs
   Item 647 - Large Roadside Sign Supports and Assemblies.
   Item 416 - Drilled Shaft Foundations
8. All signs shall be constructed in accordance with the details found in the "Standard Highway Sign Designs for Texas," latest edition. Sign details not shown in this manual shall be shown in the plans or the Engineer shall provide a detail to the Contractor before the sign is manufactured.

Texas Department of Transportation

Traffic Operations Division Standard

WORK ZONE "GIVE US A BRAKE" SIGNS

WZ(BRK)-13

FILE: wzbrk-13.dgn	DN: TxDOT	CK: TxDOT	DW: TxDOT	CK: TxDOT
© TxDOT August 1995	CONT	SECT	JOB	HIGHWAY
REVISIONS				
6-96 5-98 7-13	DIST		COUNTY	SHEET NO.
8-96 3-03				45 OF 152

116

You created this PDF from an application that is not licensed to print to novaPDF printer (http://www.novapdf.com)

WORK ZONE SHORT TERM PAVEMENT MARKINGS DETAILS

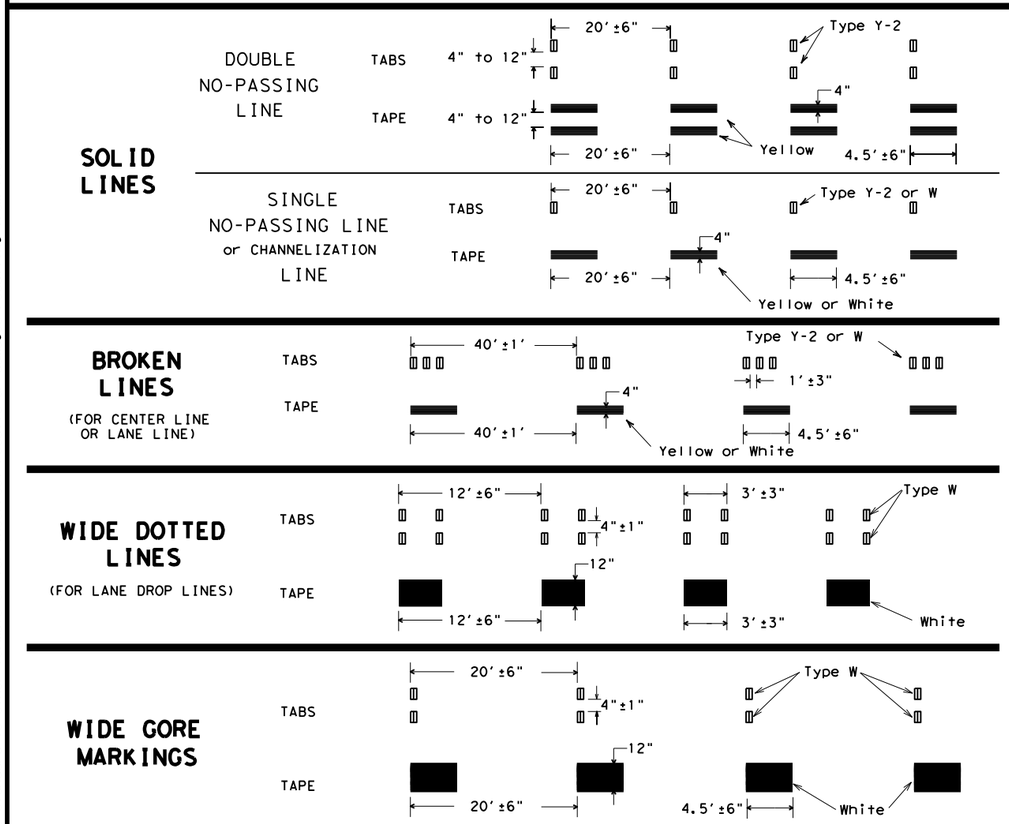

NOTES:

1. Short term pavement markings may be prefabricated markings (stick down tape) or temporary flexible-reflective roadway marker tabs unless otherwise specified elsewhere in plans.
2. Short term pavement markings shall NOT be used to simulate edge lines.
3. Dimensions indicated on this sheet are typical and approximate. Variations in size and height may occur between markers or devices made by manufacturers, by as much as 1/4 inch, unless otherwise noted.
4. Temporary flexible-reflective roadway marker tabs will require normal maintenance replacement when used on roadways with an ADT per lane of up to 7500 vehicles with no more than 10% truck mix. When roadways exceed these values, additional maintenance replacement of devices should be planned.
5. No segment of roadway open to traffic shall remain without permanent pavement markings for a period greater than 14 calendar days. The Contractor will be responsible for maintaining short term pavement markings until permanent pavement markings are in place. When the Contractor is responsible for placement of permanent pavement markings, no segment of roadway shall remain without permanent pavement markings for a period greater than 14 calendar days unless weather conditions prohibit placement. Permanent pavement markings shall be placed as soon as weather permits.
6. For two lane, two-way roadways, DO NOT PASS signs shall be erected to mark the beginning of sections where passing is prohibited and PASS WITH CARE signs shall be erected to mark the beginning of sections where passing is permitted. Signs shall be in accordance with the "Texas Manual on Uniform Traffic Control Devices" (TMUTCD) and may be used to indicate the limits of no-passing zones for up to 14 calendar days. Permanent pavement markings should then be placed.
7. For low volume two lane, two-way roadways of 4000 ADT or less, no-passing lines may be omitted when approved by the Engineer. DO NOT PASS and PASS WITH CARE signs shall be erected (see note 6).
8. For exit gores where a lane is being dropped place wide gore markings or retroreflective channelizing devices to guide motorist through the exit. If channelizing devices are to be used it should be noted elsewhere in the plans. One piece cones are not allowed for this purpose.

TEMPORARY FLEXIBLE, REFLECTIVE ROADWAY MARKER TABS (TABS)

1. Temporary flexible-reflective roadway marker tabs detailed on this sheet will be designated Type Y-2 (two amber reflective surfaces with yellow body); Type Y (one amber reflective surface with yellow body); and Type W (one white or silver reflective surface with white body). Additional details may be found on BC(11).
2. Tabs shall meet requirements of Departmental Material Specification DMS-8242.
3. When dry, tabs shall be visible for a minimum distance of 200 feet during normal daylight hours and when illuminated by automobile low-beam head light at night, unless sight distance is restricted by roadway geometrics.
4. No two consecutive tabs nor four tabs per 1000 feet of line shall be missing or fail to meet the visual performance requirements of Note 3.

WORK ZONE SHORT TERM PAVEMENT MARKINGS PATTERNS

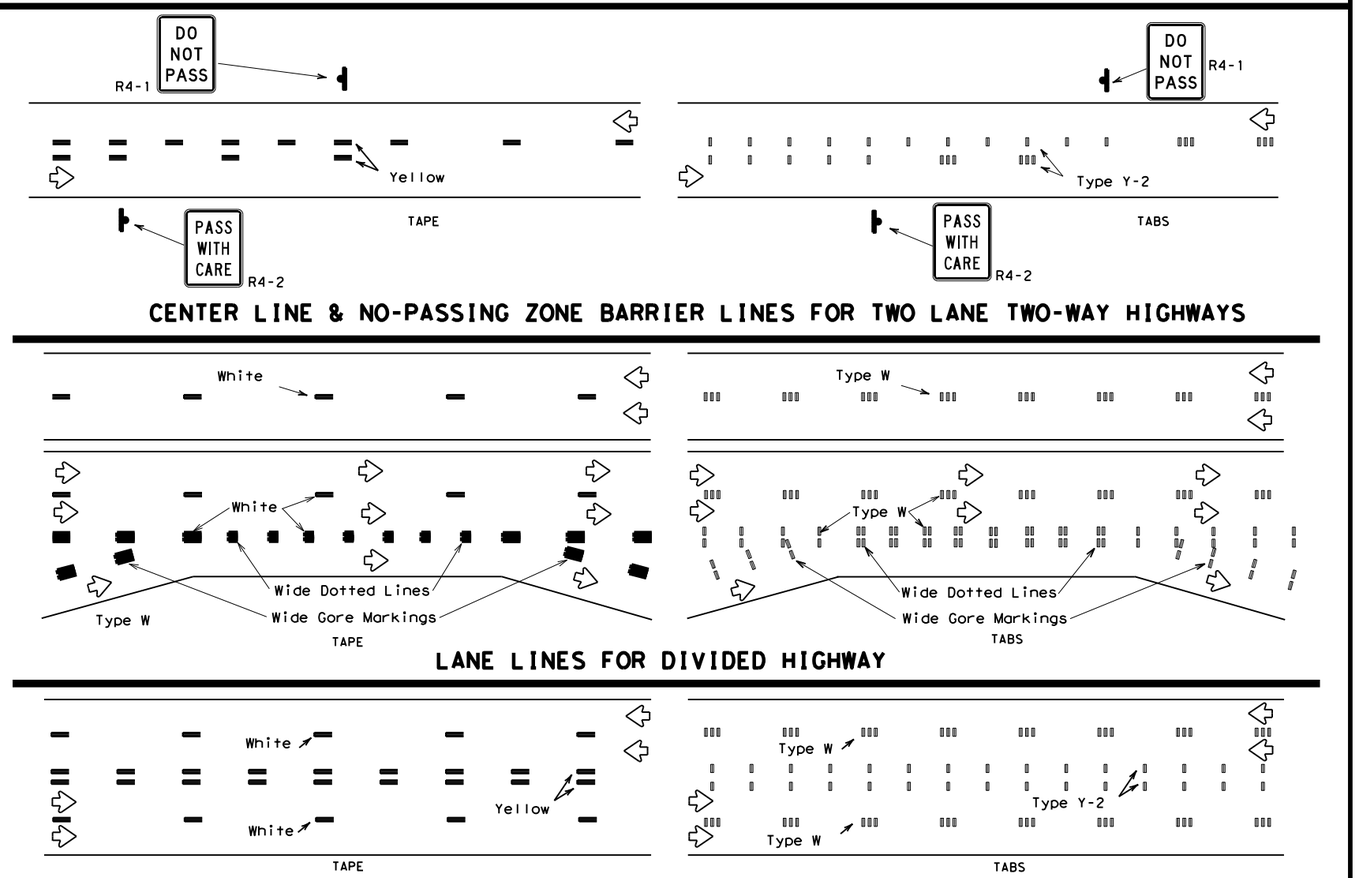

CENTER LINE & NO-PASSING ZONE BARRIER LINES FOR TWO LANE TWO-WAY HIGHWAYS

LANE LINES FOR DIVIDED HIGHWAY

LANE & CENTER LINES FOR MULTILANE UNDIVIDED HIGHWAYS

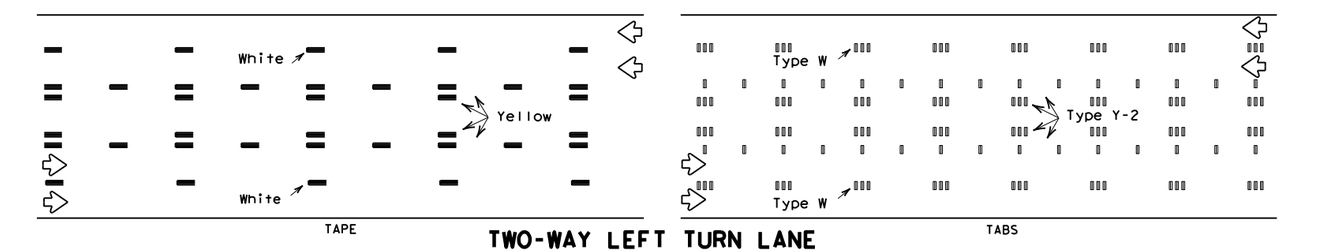

TWO-WAY LEFT TURN LANE

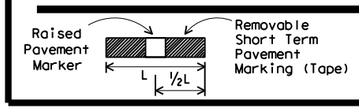

If raised pavement markers are used to supplement REMOVABLE short term markings, the markers shall be applied to the top of the tape at the approximate mid length of the tape. This allows an easier removal of raised markers and tape.

PREFABRICATED PAVEMENT MARKINGS

1. Temporary Removable Prefabricated Pavement Markings shall meet the requirements of DMS-8241.
2. Non-removable Prefabricated Pavement Markings shall meet the requirements of either DMS-8240 "Permanent Prefabricated Pavement Markings" or DMS-8243 "Temporary Costruction-Grade Prefabricated Pavement Markings."

RAISED PAVEMENT MARKERS

1. All raised pavement markers used for work zone markings shall meet the requirements of Item 672, "RAISED PAVEMENT MARKERS" and DMS-4200.

DEPARTMENTAL MATERIAL SPECIFICATIONS (DMS) & MATERIAL PRODUCER LISTS (MPL)

1. DMSs referenced above can be found along with embedded links to their respective MPLs at the following website:
http://www.txdot.gov/business/contractors_consultants/material_specifications/default.htm

Texas Department of Transportation

Traffic Operations Division Standard

WORK ZONE SHORT TERM PAVEMENT MARKINGS

WZ(STPM)-13

FILE: wzstpm-13.dgn	DN: TxDOT	CK: TxDOT	DW: TxDOT	CK: TxDOT
© TxDOT April 1992	CONT	SECT	JOB	HIGHWAY
REVISIONS 1-97 3-03 7-13	DIST		COUNTY	SHEET NO. 46 OF 152

DISCLAIMER:
The use of this standard is governed by the "Texas Engineering Practice Act". No warranty of any kind is made by TxDOT for any purpose whatsoever. TxDOT assumes no responsibility for the conversion of this standard to other formats or for incorrect results or damages resulting from its use.

DATE:
FILE:

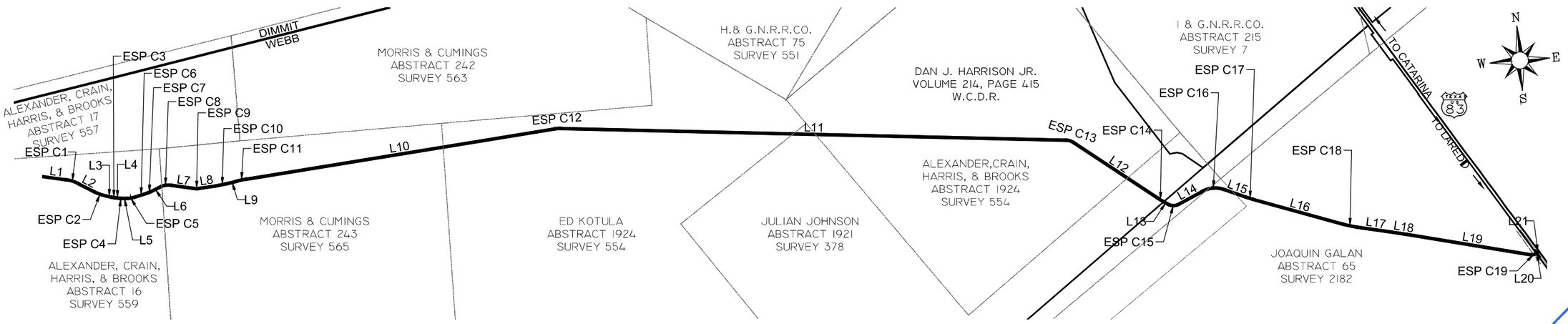

ESPEJO GATES PLAN STA: 00+00.00 TO 292+93.00

SCALE: 1" = 2000'

LINE AND CURVE TABLE							
LINE # / CURVE #	BEARING	CHORD BEARING	LENGTH	CHORD LENGTH	RADIUS	START COORD	END COORD
L1	S 67° 59' 38" E		415.15'			N: 17325942.16 E: 602116.87	N: 17325786.60 E: 602501.77
ESP C1		S 58° 24' 20" E		239.85'	720.00'	N: 17325786.60 E: 602501.77	N: 17325660.95 E: 602706.07
L2	S 48° 49' 03" E		313.23'			N: 17325660.95 E: 602706.07	N: 17325454.69 E: 602941.82
ESP C2		S 56° 10' 01" E		255.84'	1000.00'	N: 17325454.69 E: 602941.82	N: 17325312.25 E: 603154.33
L3	S 63° 30' 58" E		107.91'			N: 17325312.25 E: 603154.33	N: 17325264.13 E: 603250.92
ESP C3		S 66° 48' 45" E		57.50'	500.00'	N: 17325264.13 E: 603250.92	N: 17325241.49 E: 603303.77
L4	S 70° 06' 32" E		77.74'			N: 17325241.49 E: 603303.77	N: 17325215.04 E: 603376.88
ESP C4		S 72° 56' 58" E		49.56'	500.00'	N: 17325215.04 E: 603376.88	N: 17325200.51 E: 603424.25
L5	S 75° 47' 24" E		82.78'			N: 17325200.51 E: 603424.25	N: 17325180.19 E: 603504.50
ESP C5		S 84° 16' 53" E		147.66'	500.00'	N: 17325180.19 E: 603504.50	N: 17325165.48 E: 603651.42
ESP C6		N 86° 11' 12" E		250.49'	4836.51'	N: 17325165.48 E: 603651.42	N: 17325182.13 E: 603901.36
ESP C7		N 81° 37' 52" E		66.51'	500.00'	N: 17325182.13 E: 603901.36	N: 17325191.82 E: 603967.16
L6	N 77° 49' 03" E		188.94'			N: 17325191.82 E: 603967.16	N: 17325231.69 E: 604151.84
ESP C8		S 85° 05' 18" E		205.76'	349.11'	N: 17325231.69 E: 604151.84	N: 17325214.07 E: 604356.85
L7	S 67° 59' 39" E		440.97'			N: 17325214.07 E: 604356.85	N: 17325048.84 E: 604765.69
ESP C9		S 76° 13' 38" E		68.74'	240.00'	N: 17325048.84 E: 604765.69	N: 17325032.47 E: 604832.45
L8	S 84° 27' 36" E		341.92'			N: 17325032.47 E: 604832.45	N: 17324999.46 E: 605172.77
ESP C10		S 87° 22' 12" E		203.06'	2000.00'	N: 17324999.46 E: 605172.77	N: 17324990.15 E: 605375.62
L9	N 89° 43' 13" E		173.19'			N: 17324990.15 E: 605375.62	N: 17324990.99 E: 605548.80
ESP C11		S 87° 40' 56" E		181.28'	2000.00'	N: 17324990.99 E: 605548.80	N: 17324983.66 E: 605729.94

LINE AND CURVE TABLE							
LINE # / CURVE #	BEARING	CHORD BEARING	LENGTH	CHORD LENGTH	RADIUS	START COORD	END COORD
L10	S 85° 05' 05" E		5772.33'			N: 17324983.66 E: 605729.94	N: 17324489.06 E: 611481.04
ESP C12		S 79° 47' 41" E		92.19'	500.00'	N: 17324489.06 E: 611481.04	N: 17324472.73 E: 611571.77
L11	S 74° 30' 18" E		9340.31'			N: 17324472.73 E: 611571.77	N: 17321977.41 E: 620572.60
ESP C13		S 58° 29' 10" E		132.46'	240.00'	N: 17321977.41 E: 620572.60	N: 17321908.17 E: 620685.52
L12	S 42° 28' 03" E		1864.44'			N: 17321908.17 E: 620685.52	N: 17320532.84 E: 621944.33
ESP C14		S 44° 16' 03" E		125.65'	2000.00'	N: 17320532.84 E: 621944.33	N: 17320442.87 E: 622032.04
L13	S 46° 04' 03" E		99.85'			N: 17320442.87 E: 622032.04	N: 17320373.59 E: 622103.95
ESP C15		S 75° 05' 41" E		194.09'	200.00'	N: 17320373.59 E: 622103.95	N: 17320323.67 E: 622291.51
L14	N 75° 52' 42" E		504.27'			N: 17320323.67 E: 622291.51	N: 17320446.70 E: 622780.54
ESP C16		S 80° 21' 25" E		402.98'	500.00'	N: 17320446.70 E: 622780.54	N: 17320379.20 E: 623177.82
L15	S 56° 35' 33" E		434.70'			N: 17320379.20 E: 623177.82	N: 17320139.86 E: 623540.70
ESP C17		S 58° 30' 16" E		133.46'	2000.00'	N: 17320139.86 E: 623540.70	N: 17320070.13 E: 623654.49
L16	S 60° 24' 59" E		1715.71'			N: 17320070.13 E: 623654.49	N: 17319223.10 E: 625146.54
ESP C18		S 64° 04' 52" E		255.67'	2000.00'	N: 17319223.10 E: 625146.54	N: 17319111.35 E: 625376.50
L17	S 67° 44' 45" E		687.55'			N: 17319111.35 E: 625376.50	N: 17318850.96 E: 626012.83
L18	S 67° 00' 51" E		345.44'			N: 17318850.96 E: 626012.83	N: 17318716.07 E: 626330.84
L19	S 66° 28' 35" E		2217.16'			N: 17318716.07 E: 626330.84	N: 17317831.14 E: 628363.74
ESP C19		S 88° 59' 44" E		99.58'	130.00'	N: 17317831.14 E: 628363.74	N: 17317829.40 E: 628463.31
L20	N 68° 29' 07" E		31.25'			N: 17317829.40 E: 628463.31	N: 17317840.86 E: 628492.38
L21	N 65° 57' 58" E		24.38'			N: 17317840.86 E: 628492.38	N: 17317850.79 E: 628514.65

NOTES:

1. PROJECT BEGINS ON L2
2. L1 & ESP C1 ARE OUTSIDE CONSTRUCTION SITE

REVISION			
NO.	DATE	DESCRIPTION	
1	---	---	
2	---	---	

PLOTTED 6-6-2016

STATUS FINAL

STATE OF TEXAS
FRANCISCO RAMOS
108833
LICENSED PROFESSIONAL ENGINEER

DRAWN BY K.L. CHECKED BY J.A.M.

6/6/2016

S&B INFRASTRUCTURE, LTD.
2120 BLAINE ST. LAREDO, TEXAS 78043
TELEPHONE: (956) 568-2561 FAX: (956) 994-0227
ENGINEERING # F-1582 SURVEYING # 10193914

ESPEJO GATES
WEBB COUNTY, TEXAS
TCDP# 713110

LINE TABLE

REFERENCE FILE NAME -

DRAWING FILE NAME U2338-Line and Curve Table.2

L:\PROJECTS\WEBB COUNTY\U2338\Webb County TXDOT CERTEZ\dwg\U2338-Line and Curve Table.2.dwg

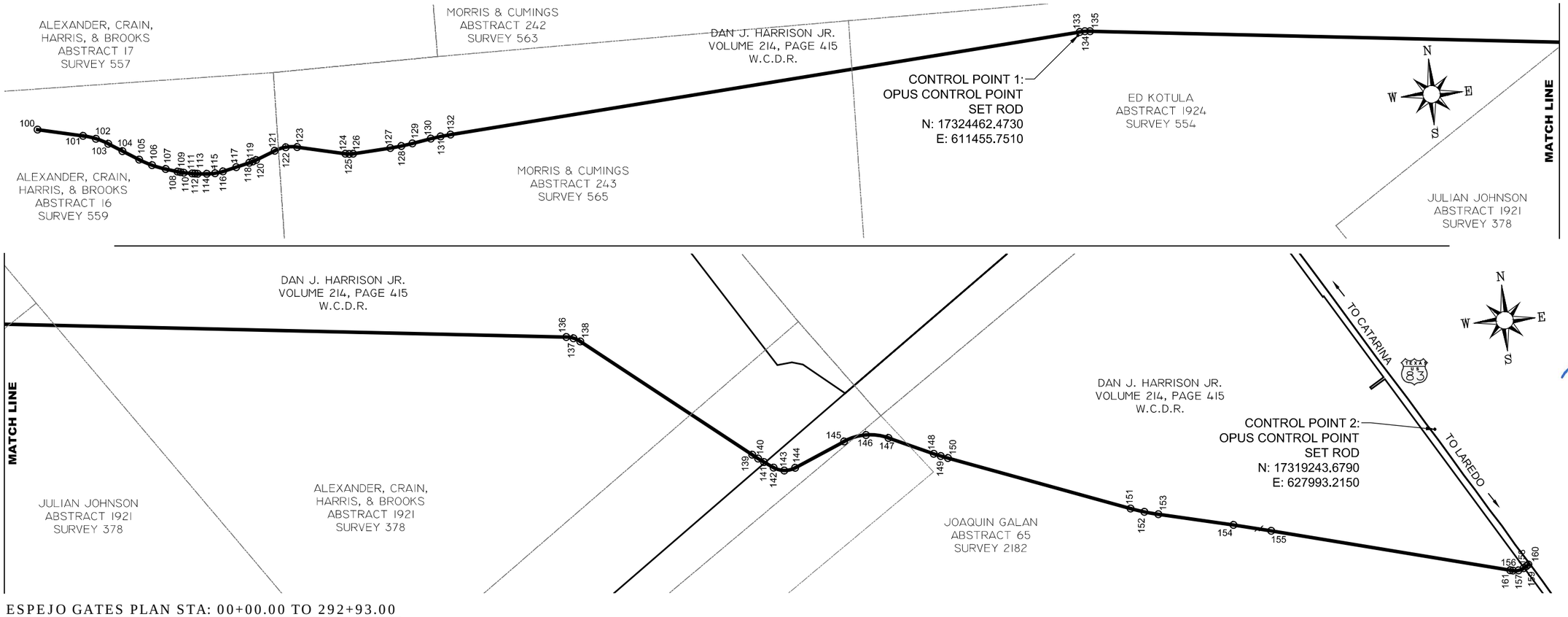

ESPEJO GATES PLAN STA: 00+00.00 TO 292+93.00

SCALE: 1" = 1000'

COORDINATE POINT TABLE			
No.	Northing	Easting	Description
100	17325942.1630	602116.8720	STA: 10+00.00 - PROJECT LIMITS
101	17325786.6045	602501.7723	STA: 14+15.15 - PC
102	17325732.3422	602609.1920	STA: 15+35.63 - MID
103	17325660.9456	602706.0731	STA: 16+56.12 - PT
104	17325566.2077	602814.3583	STA:18+00.00 - BEGIN ASPHALT
105	17325454.6941	602941.8181	STA:19+69.36 - PC
106	17325376.6482	603043.5009	STA: 20+97.63 - MID
107	17325312.2506	603154.3318	STA:22+25.89 - PT
108	17325264.1286	603250.9180	STA:22+25.89 - PT
109	17325252.0480	603277.0202	STA: 23+62.57 - MID
110	17325241.4882	603303.7739	STA:23+91.34 - PT
111	17325215.0388	603376.8753	STA:24+69.08 - PC
112	17325207.1861	603400.3844	STA: 24+93.87 - MID
113	17325200.5080	603424.2537	STA: 25+18.65 - PT
114	17325180.1886	603504.4964	STA: 26+01.43 - PC
115	17325167.3782	603577.4137	STA:26+75.53 - MID
116	17325165.4753	603651.4233	STA:27+49.63 - PT/PC
117	17325172.1868	603776.4988	STA: 28+74.90 - MID
118	17325182.1350	603901.3586	STA:30.0015 - PT/PC
119	17325185.8798	603934.4205	STA:30+33.43 - MID

COORDINATE POINT TABLE			
No.	Northing	Easting	Description
120	17325191.8152	603967.1602	STA: 30+66.71 - PT
121	17325231.6863	604151.8450	STA: 32+55.65 - PC
122	17325238.3241	604255.6746	STA: 33+60.07 - MID
123	17325214.0691	604356.8494	STA: 34+64.50 - PT
124	17325048.8367	604765.6935	STA:39+05.47 - PC
125	17325038.2523	604798.4840	STA: 39+39.95 - MID
126	17325032.4726	604832.4522	STA: 39+74.44 - PT
127	17324999.4640	605172.7715	STA: 43+16.35 - PC
128	17324992.2290	605274.0765	STA: 44+17.93 - MID
129	17324990.1460	605375.6182	STA: 45+19.50 - PT
130	17324990.9918	605548.8023	STA: 46+92.69 - PC
131	17324989.3794	605639.4533	STA: 47+83.36 - MID
132	17324983.6602	605729.9382	STA: 48+74.03 - PT
133	17324489.0605	611481.0354	STA: 106+46.36 - PC
134	17324482.9891	611526.7805	STA: 106+92.52 - MID
135	17324472.7261	611571.7710	STA:107+38.69 - PT
136	17321977.4074	620572.5958	STA: 200+79.00 - PC
137	17321950.7340	620633.9275	STA: 201+46.10 - MID
138	17321908.1716	620685.5172	STA:202+13.20 - PT
139	17320532.8434	621944.3345	STA: 220+77.64 - PC

COORDINATE POINT TABLE			
No.	Northing	Easting	Description
140	17320487.1663	621987.4801	STA: 221+40.48 - MID
141	17320442.8670	622032.0392	STA: 222+03.31 - PT
142	17320373.5897	622103.9476	STA: 223+03.16 - PC
143	17320324.3510	622191.2648	STA: 224+04.49 - MID
144	17320323.6655	622291.5059	STA: 225+05.81 - PT
145	17320446.6984	622780.5365	STA:230+10.08 - PC
146	17320454.7440	622986.2815	STA: 232+17.47 - MID
147	17320379.1961	623177.8232	STA:234+24.85 - PT
148	17320139.8563	623540.6967	STA: 238+59.55 - PC
149	17320104.0450	623597.0141	STA: 239+26.29 - MID
150	17320070.1327	623654.4949	STA: 239+93.03 - PT
151	17319223.0997	625146.5407	STA: 257+08.74 - PC
152	17319163.5444	625259.7310	STA: 258+36.67 - MID
153	17319111.3459	625376.4966	STA: 259+64.59 - PT
154	17318850.9629	626012.8290	STA: 266+52.13 - PI
155	17318716.0684	626330.8388	STA: 269+97.57 - PI
156	17317831.1427	628363.7428	STA: 292+14.73 - PC
157	17317820.3592	628413.3503	STA: 292+65.82 - MID
158	17317829.3971	628463.3054	STA: 293+16.92 - PT
159	17317840.8579	628492.3783	STA: 293+48.17 - TIE TO EXISTING

COORDINATE POINT TABLE			
No.	Northing	Easting	Description
160	17317850.7883	628514.6471	STA:293+73 - PROJECT LIMITS
161	17317841.1522	628340.7483	STA:291+89.65 - END ASPHALT

NOTE:
CONTRACTOR SHALL COORDINATE WITH ENGINEER FOR LOCATIONS OF ADDITIONAL CONTROL POINTS AND BENCHMARKS

REVISION		
NO.	DATE	DESCRIPTION
1	---	---
2	---	---

PLOTTED 6-6-2016

STATUS FINAL

STATE OF TEXAS
FRANCISCO RAMOS
108833
LICENSED PROFESSIONAL ENGINEER

6/6/2016

DRAWN BY K.L. CHECKED BY J.A.M.

S&B INFRASTRUCTURE, LTD.
2120 BLAINE ST. LAREDO, TEXAS 78043
TELEPHONE: (956) 568-2561 FAX: (956) 994-0021
ENGINEERING # F-1582 SURVEYING # 10193914

ESPEJO GATES
WEBB COUNTY, TEXAS
TCDP# 713110

ALIGNMENT COORDINATE SHEET/CONTROL SHEET

REFERENCE FILE NAME -

DRAWING FILE NAME U2338-Coordinate Sheet

L:\PROJECTS\WEBB COUNTY\U2338\Webb County TXDOT CERTEZ\dwg\U2338-Coordinate Sheet.dwg

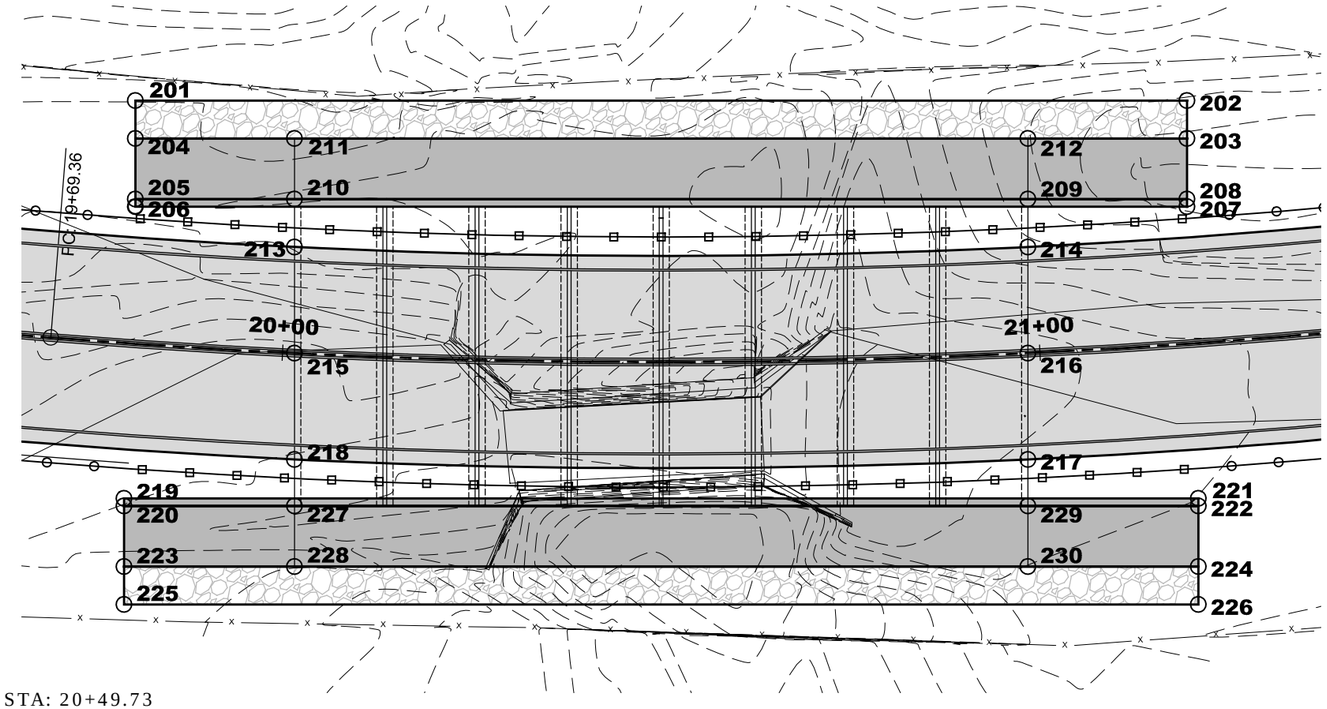

ESPEJO GATES PLAN BRIDGE CLASS STA: 20+49.73

SCALE: 1" = 20'

COORDINATE POINT TABLE			
No.	*Northing*	*Easting*	*Description*
201	17325473.1424	602969.4030	TR
202	17325390.4725	603080.8731	TR
203	17325386.4565	603077.8947	TC
204	17325469.1263	602966.4246	TC
205	17325462.7006	602961.6591	TW
206	17325461.8974	602961.0634	TW
207	17325379.2275	603072.5335	TW
208	17325380.0307	603073.1292	TW
209	17325392.5402	603056.2617	FL
210	17325450.1911	602978.5266	FL
211	17325456.6168	602983.2921	FL
212	17325398.9660	603061.0272	FL
213	17325445.1213	602974.7667	TP
214	17325387.4705	603052.5018	TP
215	17325433.8630	602966.4171	TP
216	17325376.2121	603044.1522	TP
217	17325364.9541	603035.8029	TP
218	17325422.6050	602958.0678	TP
219	17325431.8672	602936.9245	TW
220	17325431.0640	602936.3288	TW

COORDINATE POINT TABLE			
No.	*Northing*	*Easting*	*Description*
221	17325347.4102	603050.8042	TW
222	17325346.6070	603050.2085	TW
223	17325424.6383	602931.5633	TC
224	17325340.1813	603045.4430	TC
225	17325420.6222	602928.5848	TR
226	17325336.1652	603042.4646	TR
227	17325417.6609	602954.4011	FL
228	17325411.2352	602949.6356	FL
229	17325360.0101	603032.1362	FL
230	17325353.5843	603027.3707	FL

TR= TOP OF ROCK
TC= TOP OF CONCRETE
TW= TOP OF WALL
FL= FLOW LINE
TP= TOP OF PAVEMENT

REVISION		
NO.	DATE	DESCRIPTION
1	---	---
2	---	---

PLOTTED 6-6-2016

STATUS FINAL

STATE OF TEXAS
FRANCISCO RAMOS
108833
LICENSED PROFESSIONAL ENGINEER

DRAWN BY O.C. CHECKED BY J.A.M.

6/6/2016

S&B INFRASTRUCTURE, LTD.
2120 BLAINE ST. LAREDO, TEXAS 78043
TELEPHONE: (956) 568-2561 FAX: (956) 994-0022
ENGINEERING # F-1582 SURVEYING # 10193914

ESPEJO GATES
WEBB COUNTY, TEXAS

STA 20+49.73
COORDINATES

REFERENCE FILE NAME
-
DRAWING FILE NAME
U2338-MBC-1 COOR

L:\PROJECTS\WEBB COUNTY\U2338\Webb County TXDOT CERTEZ\dwg\COORDINATE DETAILS\U2338-MBC-1 COOR.dwg

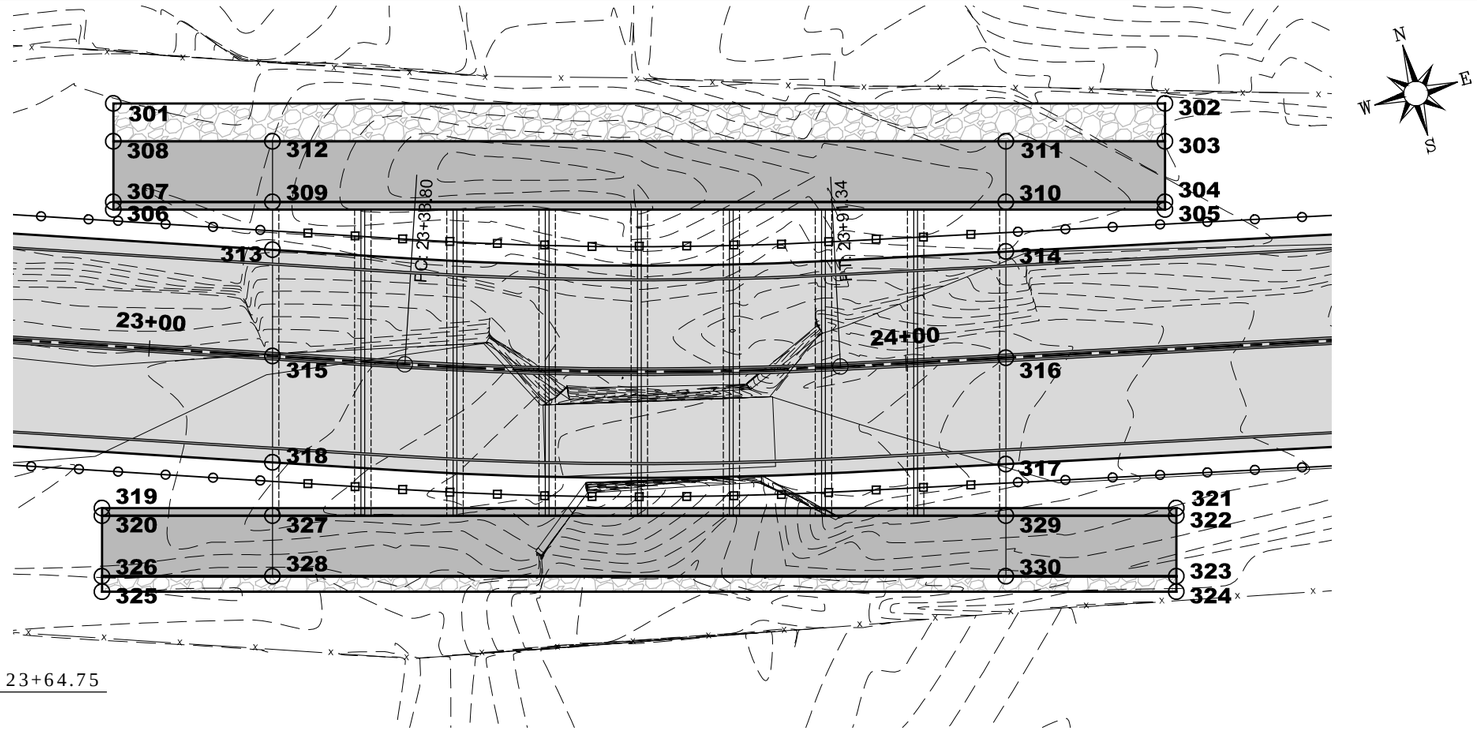

ESPEJO GATES PLAN BRIDGE CLASS STA: 23+64.75

SCALE: 1" = 20'

COORDINATE POINT TABLE

No.	Northing	Easting	Description
301	17325310.8207	603228.8916	TR
302	17325256.8093	603356.7300	TR
303	17325252.2035	603354.7841	TC
304	17325244.8342	603351.6706	TW
305	17325243.9131	603351.2814	TW
306	17325297.9245	603223.4430	TW
307	17325298.8457	603223.8322	TW
308	17325306.2149	603226.9457	TC
309	17325290.6727	603243.1765	FL
310	17325253.0072	603332.3263	FL
311	17325260.3765	603335.4398	FL
312	17325298.0420	603246.2900	FL
313	17325284.8522	603240.7174	TP
314	17325246.9687	603329.7750	TP
315	17325271.9308	603235.2581	TP
316	17325234.0547	603324.3189	TP
317	17325221.1406	603318.8627	TP
318	17325259.0094	603229.7988	TP
319	17325262.2017	603206.7218	TW
320	17325261.2806	603206.3326	TW

COORDINATE POINT TABLE

No.	Northing	Easting	Description
321	17325207.0227	603337.3237	TW
322	17325206.1016	603336.9345	TW
323	17325198.7323	603333.8210	TC
324	17325196.8900	603333.0426	TR
325	17325252.0690	603202.4408	TR
326	17325253.9113	603203.2191	TC
327	17325252.5238	603227.0587	FL
328	17325245.1546	603223.9452	FL
329	17325214.8583	603316.2084	FL
330	17325207.4890	603313.0949	FL

TR= TOP OF ROCK
TC= TOP OF CONCRETE
TW= TOP OF WALL
FL= FLOW LINE
TP= TOP OF PAVEMENT

REVISION		
NO.	DATE	DESCRIPTION
1	---	---
2	---	---

PLOTTED 6-6-2016

STATUS FINAL

STATE OF TEXAS
FRANCISCO RAMOS
108833
LICENSED PROFESSIONAL ENGINEER

DRAWN BY O.C. CHECKED BY J.A.M.

6/6/2016

S&B INFRASTRUCTURE, LTD.
2120 BLAINE ST. LAREDO, TEXAS 78043
TELEPHONE: (956) 568-2561 FAX: (956) 994-0027
ENGINEERING # F-1582 SURVEYING # 10193914

ESPEJO GATES
WEBB COUNTY, TEXAS

STA 23+64.75
COORDINATES

REFERENCE FILE NAME
-
DRAWING FILE NAME
U2338-MBC-2 COOR

L:\PROJECTS\WEBB COUNTY\U2338\Webb County TXDOT CERTEZ\dwg\COORDINATE DETAILS\U2338-MBC-2 COOR.dwg

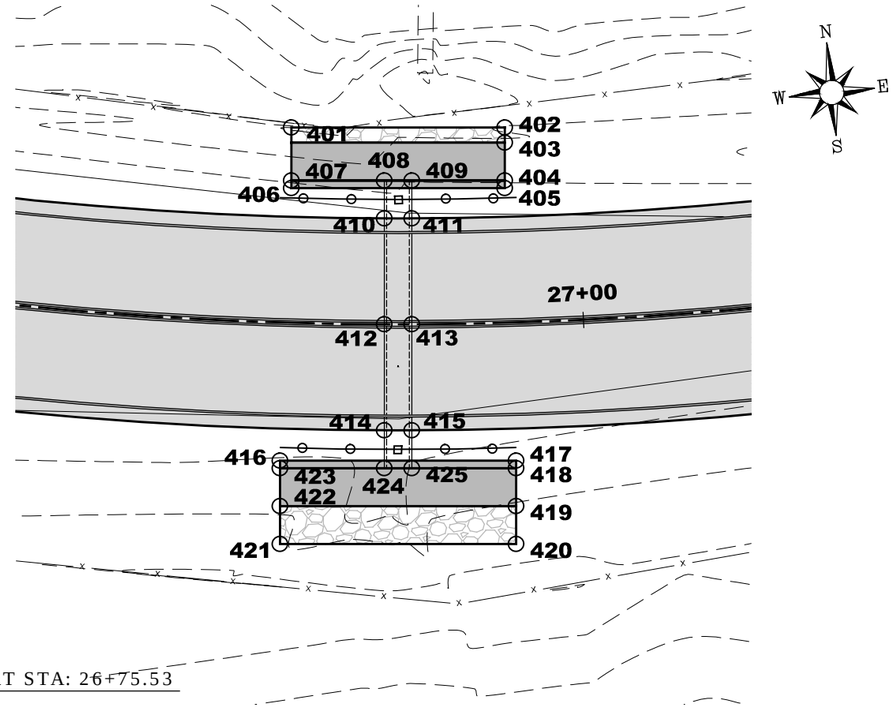

ESPEJO GATES PLAN BOX CULVERT STA: 26+75.53
SCALE: 1" = 20'

COORDINATE POINT TABLE			
No.	*Northing*	*Easting*	*Description*
401	17325194.6541	603565.9947	TR
402	17325191.8482	603594.0145	TR
403	17325189.8581	603593.8153	TC
404	17325184.8830	603593.3171	TW
405	17325183.8880	603593.2174	TW
406	17325186.6939	603565.1976	TW
407	17325187.6889	603565.2972	TW
408	17325186.4683	603577.4862	FL
409	17325186.1036	603581.1280	FL
410	17325181.4943	603576.9881	TP
411	17325181.1296	603580.6299	TP
412	17325167.5639	603575.5931	TP
413	17325167.2202	603579.2370	TP
414	17325153.6335	603574.1981	TP
415	17325153.2688	603577.8399	TP
416	17325151.0224	603560.1179	TW
417	17325147.9175	603591.1228	TW
418	17325146.9225	603591.0232	TW
419	17325141.9474	603590.5250	TC
420	17325136.9723	603590.0268	TR

COORDINATE POINT TABLE			
No.	*Northing*	*Easting*	*Description*
421	17325140.0771	603559.0218	TR
422	17325145.0522	603559.5200	TC
423	17325150.0273	603560.0183	TW
424	17325148.6574	603573.6998	FL
425	17325148.2927	603577.3416	FL

TR= TOP OF ROCK
TC= TOP OF CONCRETE
TW= TOP OF WALL
FL= FLOW LINE
TP= TOP OF PAVEMENT

REVISION		
NO.	DATE	DESCRIPTION
1	---	---
2	---	---

PLOTTED 6-6-2016
STATUS FINAL

STATE OF TEXAS
FRANCISCO RAMOS
108833
LICENSED PROFESSIONAL ENGINEER

DRAWN BY O.C.
CHECKED BY J.A.M.

6/6/2016

S&B
S&B INFRASTRUCTURE, LTD.
2120 BLAINE ST. LAREDO, TEXAS 78043
TELEPHONE: (956) 568-2561 FAX: (956) 994-0022
ENGINEERING # F-1582 SURVEYING # 10193914

ESPEJO GATES
WEBB COUNTY, TEXAS

STA 26+75.53
COORDINATES

REFERENCE FILE NAME
-
DRAWING FILE NAME
U2338-MBC-3 COOR

L:\PROJECTS\WEBB COUNTY\U2338\Webb County TXDOT CERTEZ\dwg\COORDINATE DETAILS\U2338-MBC-3 COOR.dwg

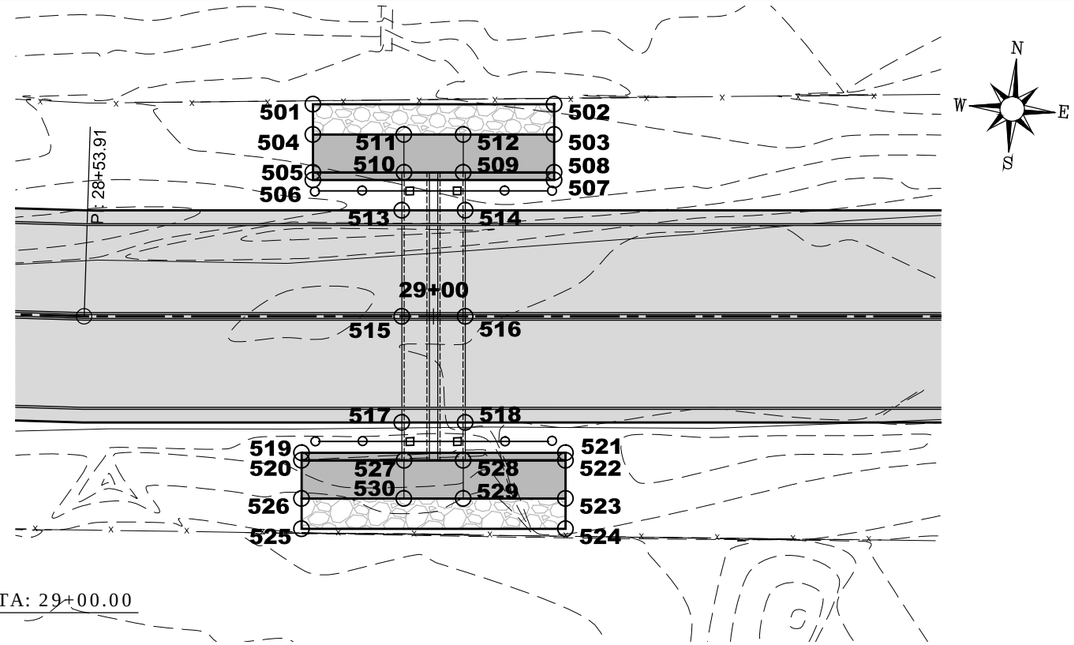

ESPEJO GATES PLAN M.B.C. STA: 29+00.00

SCALE: 1" = 20'

COORDINATE POINT TABLE			
No.	*Northing*	*Easting*	*Description*
501	17325200.8294	603783.4494	TR
502	17325203.3550	603815.1489	TR
503	17325199.3676	603815.4666	TC
504	17325196.8420	603783.7671	TC
505	17325191.8578	603784.1642	TW
506	17325190.8610	603784.2436	TW
507	17325193.3866	603815.9432	TW
508	17325194.3834	603815.8637	TW
509	17325193.4304	603803.9016	FL
510	17325192.8135	603796.1595	FL
511	17325197.7951	603795.7292	FL
512	17325198.4146	603803.5045	FL
513	17325187.8031	603796.2277	TP
514	17325188.4697	603804.5945	TP
515	17325173.8473	603797.3396	TP
516	17325174.5139	603805.7064	TP
517	17325159.8916	603798.4515	TP
518	17325160.5582	603806.8183	TP
519	17325154.8555	603785.6076	TW
520	17325153.8587	603785.6870	TW

COORDINATE POINT TABLE			
No.	*Northing*	*Easting*	*Description*
521	17325157.6195	603820.2976	TW
522	17325156.6226	603820.3771	TW
523	17325151.6384	603820.7742	TC
524	17325147.6510	603821.0919	TR
525	17325144.8871	603786.4018	TR
526	17325148.8745	603786.0841	TC
527	17325154.9336	603799.1776	FL
528	17325155.5504	603806.9197	FL
529	17325150.5662	603807.3168	FL
530	17325149.9467	603799.5415	FL

TR= TOP OF ROCK
TC= TOP OF CONCRETE
TW= TOP OF WALL
FL= FLOW LINE
TP= TOP OF PAVEMENT

REVISION		
NO.	DATE	DESCRIPTION
1	---	---
2	---	---

PLOTTED 6-6-2016

STATUS FINAL

STATE OF TEXAS
FRANCISCO RAMOS
108833
LICENSED PROFESSIONAL ENGINEER

DRAWN BY O.C. CHECKED BY J.A.M.

6/6/2016

S&B INFRASTRUCTURE, LTD.
2120 BLAINE ST. LAREDO, TEXAS 78043
TELEPHONE: (956) 568-2561 FAX: (956) 994-0022
ENGINEERING # F-1582 SURVEYING # 10193914

ESPEJO GATES
WEBB COUNTY, TEXAS

STA 29+00.00
COORDINATES

REFERENCE FILE NAME

DRAWING FILE NAME
U2338-MBC-4 COOR

L:\PROJECTS\WEBB COUNTY\U2338\Webb County TXDOT CERTEZ\dwg\COORDINATE DETAILS\U2338-MBC-4 COOR.dwg

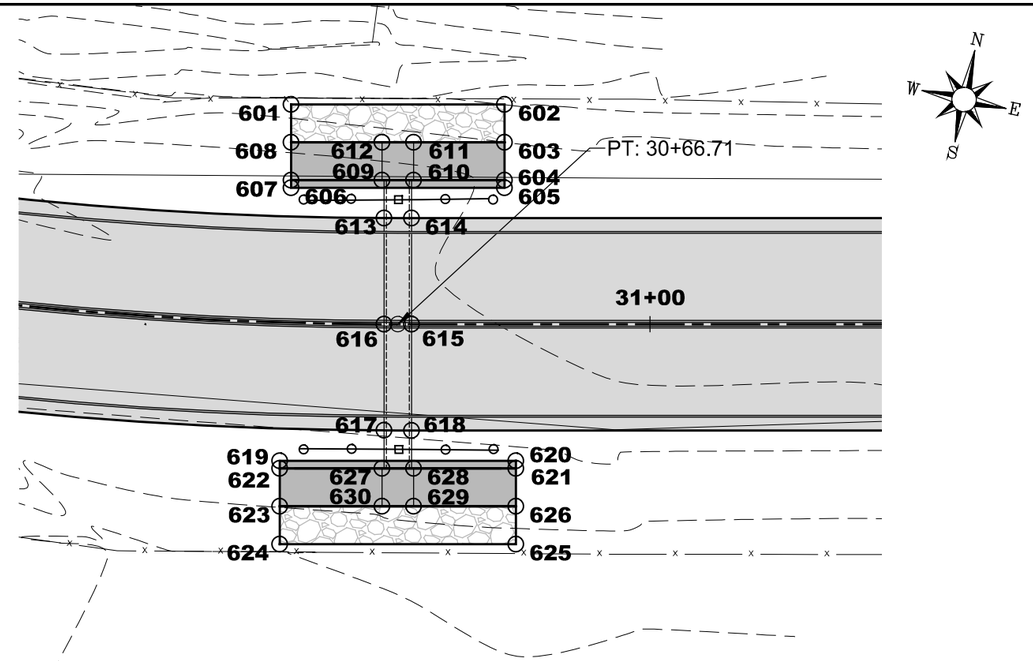

ESPEJO GATES PLAN BOX CULVERT STA: 30+66.71
SCALE: 1" = 20'

COORDINATE POINT TABLE

No.	Northing	Easting	Description
601	17325217.1932	603947.2770	TR
602	17325223.1357	603974.8028	TR
603	17325218.2483	603975.8580	TC
604	17325213.3609	603976.9131	TW
605	17325212.3834	603977.1241	TW
606	17325206.4409	603949.5983	TW
607	17325207.4184	603949.3873	TW
608	17325212.3058	603948.3321	TC
609	17325209.9507	603961.1170	FL
610	17325210.8286	603965.1833	FL
611	17325215.7160	603964.1282	FL
612	17325214.8381	603960.0619	FL
613	17325205.1171	603962.4163	TP
614	17325205.8861	603965.9946	TP
615	17325192.2014	603968.9489	TP
616	17325191.4478	603965.3673	TP
617	17325177.7475	603968.3250	TP
618	17325178.5167	603971.9033	TP
619	17325170.9349	603955.7290	TW
620	17325177.5105	603986.1873	TW

COORDINATE POINT TABLE

No.	Northing	Easting	Description
621	17325176.5330	603986.3983	TW
622	17325169.9574	603955.9400	TW
623	17325165.0700	603956.9952	TC
624	17325160.1826	603958.0503	TR
625	17325166.7582	603988.5086	TR
626	17325171.6456	603987.4535	TC
627	17325172.8063	603969.1360	FL
628	17325173.6841	603973.2023	FL
629	17325168.7967	603974.2575	FL
630	17325167.9189	603970.1912	FL

TR= TOP OF ROCK
TC= TOP OF CONCRETE
TW= TOP OF WALL
FL= FLOW LINE
TP= TOP OF PAVEMENT

NO.	DATE	DESCRIPTION
1	---	---
2	---	---

REVISION

PLOTTED 6-6-2016

STATUS FINAL

STATE OF TEXAS
FRANCISCO RAMOS
108833
LICENSED PROFESSIONAL ENGINEER

DRAWN BY O.C. CHECKED BY J.A.M.

6/6/2016

S&B INFRASTRUCTURE, LTD.
2120 BLAINE ST. LAREDO, TEXAS 78043
TELEPHONE: (956) 568-2561 FAX: (956) 994-0022
ENGINEERING # F-1582 SURVEYING # 10193914

ESPEJO GATES
WEBB COUNTY, TEXAS

STA 30+66.71
COORDINATES

REFERENCE FILE NAME
-
DRAWING FILE NAME
U2338-MBC-5 COOR

L:\PROJECTS\WEBB COUNTY\U2338\Webb County TXDOT CERTEZ\dwg\COORDINATE DETAILS\U2338-MBC-5 COOR.dwg

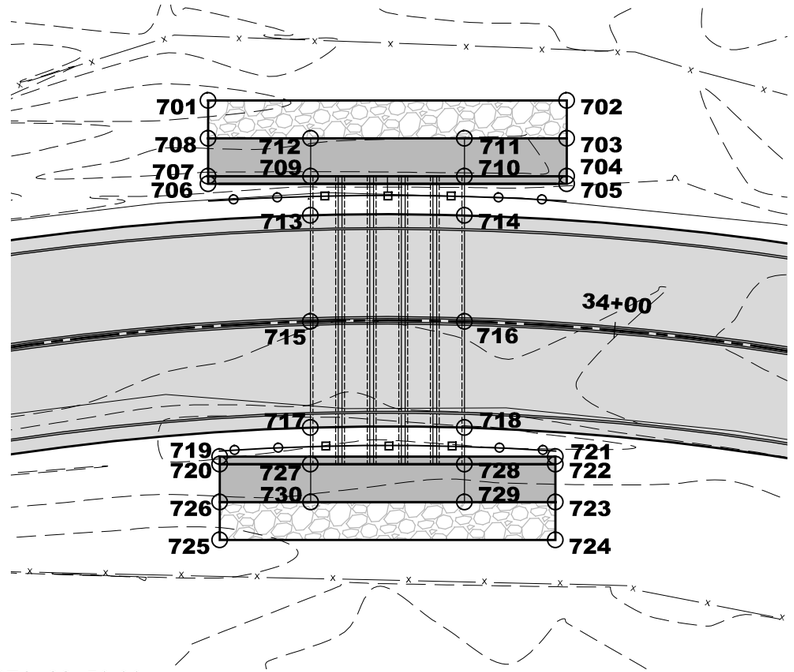

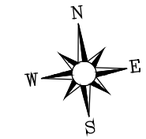

ESPEJO GATES PLAN M.B.C. STA: 33+70.00

SCALE: 1" = 20'

COORDINATE POINT TABLE

No.	Northing	Easting	Description
701	17325268.7965	604245.3546	TR
702	17325263.4117	604292.3470	TR
703	17325258.4442	604291.7778	TC
704	17325253.4767	604291.2086	TW
705	17325252.4832	604291.0948	TW
706	17325257.8680	604244.1023	TW
707	17325258.8615	604244.2161	TW
708	17325263.8290	604244.7853	TC
709	17325257.3246	604257.6284	FL
710	17325255.0121	604277.8096	FL
711	17325259.9811	604278.3656	FL
712	17325262.2921	604258.1976	FL
713	17325252.2177	604257.0297	TP
714	17325249.9036	604277.2242	TP
715	17325238.3030	604255.4353	TP
716	17325235.9890	604275.6298	TP
717	17325224.3880	604253.8407	TP
718	17325222.0739	604274.0353	TP
719	17325221.9313	604241.4941	TW
720	17325220.9378	604241.3803	TW

COORDINATE POINT TABLE

No.	Northing	Easting	Description
721	17325216.8880	604285.5061	TW
722	17325215.8945	604285.3923	TW
723	17325210.9270	604284.8231	TC
724	17325205.9595	604284.2538	TR
725	17325211.0028	604240.2419	TR
726	17325215.9703	604240.8111	TC
727	17325219.5732	604253.2890	FL
728	17325217.2591	604273.4835	FL
729	17325212.2932	604272.9011	FL
730	17325214.6042	604252.7331	FL

TR= TOP OF ROCK
TC= TOP OF CONCRETE
TW= TOP OF WALL
FL= FLOW LINE
TP= TOP OF PAVEMENT

NO.	DATE	DESCRIPTION
1	---	---
2	---	---

REVISION

PLOTTED 6-6-2016

STATUS FINAL

STATE OF TEXAS
FRANCISCO RAMOS
108833
LICENSED
PROFESSIONAL ENGINEER

DRAWN BY O.C. CHECKED BY J.A.M.

6/6/2016

S&B INFRASTRUCTURE, LTD.
2120 BLAINE ST. LAREDO, TEXAS 78043
TELEPHONE: (956) 568-2561 FAX: (956) 994-0227
ENGINEERING # F-1582 SURVEYING # 10193914

ESPEJO GATES
WEBB COUNTY, TEXAS

STA 33+70.00
COORDINATES

REFERENCE FILE NAME
-
DRAWING FILE NAME
U2338-MBC-6 COOR

L:\PROJECTS\WEBB COUNTY\U2338\Webb County TXDOT CERTEZ\dwg\COORDINATE DETAILS\U2338-MBC-6 COOR.dwg

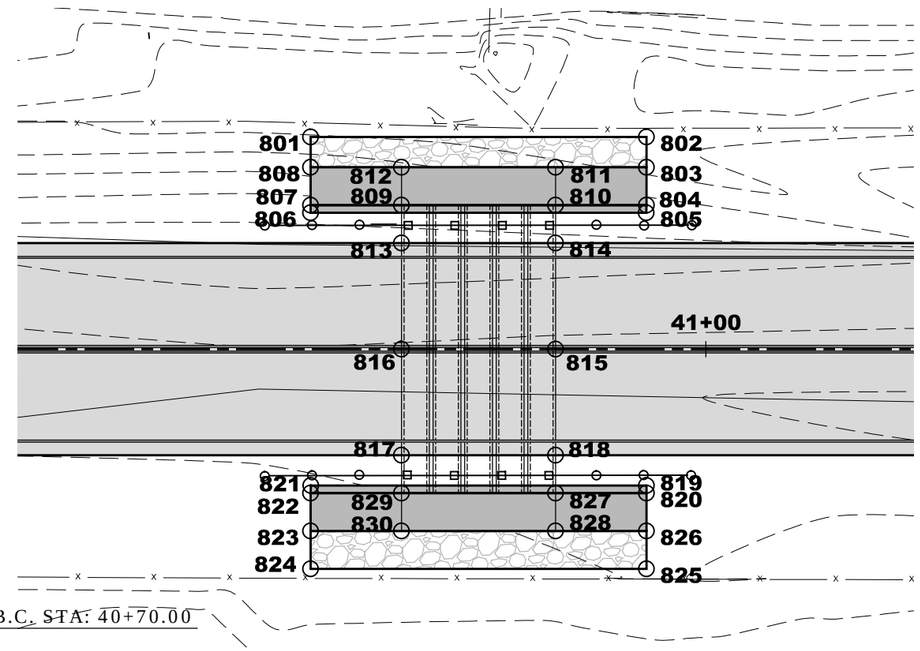

ESPEJO GATES PLAN M.B.C. STA: 40+70.00
SCALE: 1" = 20'

COORDINATE POINT TABLE

No.	Northing	Easting	Description
801	17325053.2546	604908.2244	TR
802	17325048.9779	604952.3175	TR
803	17325044.9966	604951.9313	TC
804	17325040.0199	604951.4486	TW
805	17325039.0264	604951.3348	TW
806	17325043.3013	604907.2590	TW
807	17325044.2967	604907.3555	TW
808	17325049.2733	604907.8382	TC
809	17325043.1395	604919.2862	FL
810	17325041.1771	604939.5179	FL
811	17325046.1551	604939.9874	FL
812	17325048.1148	604919.7822	FL
813	17325038.1628	604918.8035	TP
814	17325036.2005	604939.0352	TP
815	17325022.2659	604937.6837	TP
816	17325024.2282	604917.4519	TP
817	17325010.2936	604916.1004	TP
818	17325008.3313	604936.3321	TP
819	17325003.1928	604947.8766	TW
820	17325002.1974	604947.7801	TW

COORDINATE POINT TABLE

No.	Northing	Easting	Description
821	17325007.4677	604903.8009	TW
822	17325006.4742	604903.6870	TW
823	17325001.4975	604903.2043	TC
824	17324996.5209	604902.7216	TR
825	17324992.2441	604946.8147	TR
826	17324997.2208	604947.2974	TC
827	17325003.3559	604935.8361	FL
828	17324998.3793	604935.3534	FL
829	17325005.3157	604915.6310	FL
830	17325000.3390	604915.1483	FL

TR= TOP OF ROCK
TC= TOP OF CONCRETE
TW= TOP OF WALL
FL= FLOW LINE
TP= TOP OF PAVEMENT

REVISION		
NO.	DATE	DESCRIPTION
1	---	---
2	---	---

PLOTTED 6-6-2016
STATUS FINAL

STATE OF TEXAS
FRANCISCO RAMOS
108833
LICENSED
PROFESSIONAL ENGINEER

DRAWN BY O.C. CHECKED BY J.A.M.

6/6/2016

S&B INFRASTRUCTURE, LTD.
2120 BLAINE ST. LAREDO, TEXAS 78043
TELEPHONE: (956) 568-2561 FAX: (956) 994-0027
ENGINEERING # F-1582 SURVEYING # 10193914

ESPEJO GATES
WEBB COUNTY, TEXAS

STA 40+70.00
COORDINATES

REFERENCE FILE NAME
-
DRAWING FILE NAME
U2338-MBC-7 COOR

L:\PROJECTS\WEBB COUNTY\U2338\Webb County TXDOT CERTEZ\dwg\COORDINATE DETAILS\U2338-MBC-7 COOR.dwg

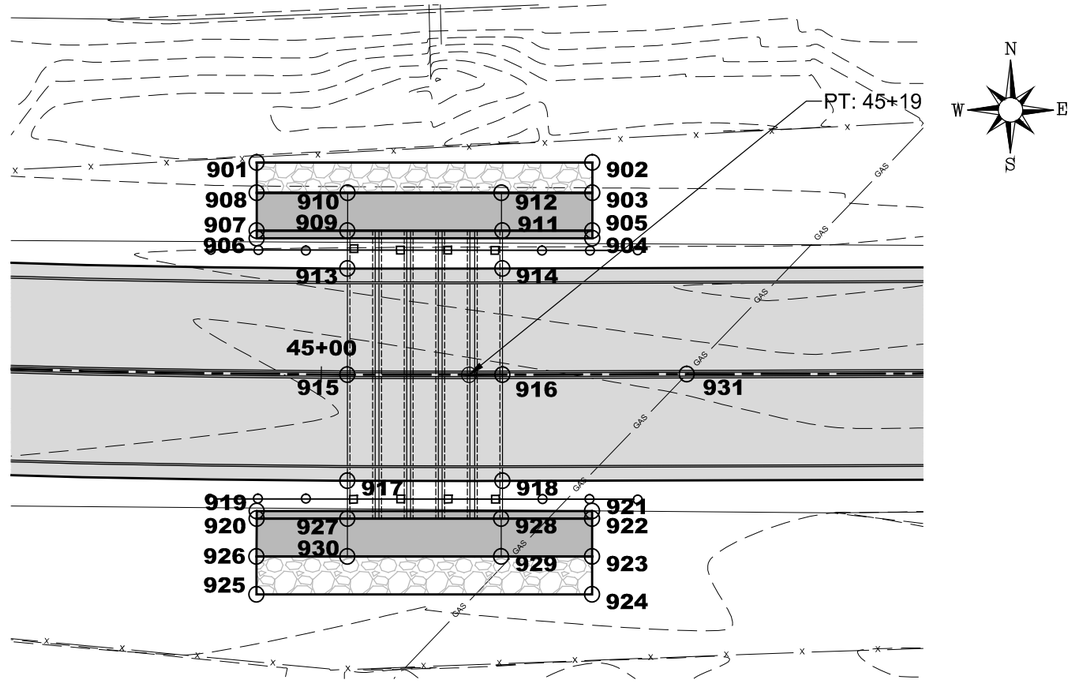

ESPEJO GATES PLAN M.B.C. STA: 45+13.61
SCALE: 1" = 20'

COORDINATE POINT TABLE

No.	Northing	Easting	Description
901	17325018.1073	605347.5265	TR
902	17325018.1933	605391.8264	TR
903	17325014.1933	605391.8342	TC
904	17325008.1933	605391.8458	TW
905	17325009.1933	605391.8439	TW
906	17325008.1074	605347.5459	TW
907	17325009.1074	605347.5440	TW
908	17325014.1074	605347.5343	TC
909	17325009.1306	605359.5306	FL
910	17325014.1306	605359.5342	FL
911	17325009.1703	605379.9892	FL
912	17325014.1700	605379.8342	FL
913	17325004.1322	605359.5403	TP
914	17325004.1676	605379.9989	TP
915	17324990.1321	605359.5674	TP
916	17324990.1676	605380.0260	TP
917	17324976.1319	605359.5946	TP
918	17324976.1675	605380.0532	TP
919	17324972.1070	605347.6157	TW
920	17324971.1070	605347.6177	TW

COORDINATE POINT TABLE

No.	Northing	Easting	Description
921	17324972.1929	605391.9156	TW
922	17324971.1929	605391.9176	TW
923	17324966.1929	605391.9273	TC
924	17324961.1929	605391.9370	FL
925	17324961.1070	605347.6371	FL
926	17324966.1070	605347.6274	TC
927	17324971.1307	605359.6043	FL
928	17324971.1696	605379.9176	FL
929	17324966.1696	605379.9273	FL
930	17324966.1303	605359.6273	FL
931	17324990.2865	605404.3777	PL CROSSING

TR= TOP OF ROCK
TC= TOP OF CONCRETE
TW= TOP OF WALL
FL= FLOW LINE
TP= TOP OF PAVEMENT
PL= PIPELINE CROSSING

NO.	DATE	DESCRIPTION
1	---	---
2	---	---

REVISION

PLOTTED 6-6-2016

STATUS FINAL

STATE OF TEXAS
FRANCISCO RAMOS
108833
LICENSED PROFESSIONAL ENGINEER

DRAWN BY O.C. CHECKED BY J.A.M.

6/6/2016

S&B INFRASTRUCTURE, LTD.
2120 BLAINE ST. LAREDO, TEXAS 78043
TELEPHONE: (956) 568-2561 FAX: (956) 994-0027
ENGINEERING # F-1582 SURVEYING # 10193914

ESPEJO GATES
WEBB COUNTY, TEXAS

STA 45+13.61
COORDINATES

REFERENCE FILE NAME
-
DRAWING FILE NAME
U2338-MBC-8 COOR

L:\PROJECTS\WEBB COUNTY\U2338\Webb County TXDOT CERTEZ\dwg\COORDINATE DETAILS\U2338-MBC-8 COOR.dwg

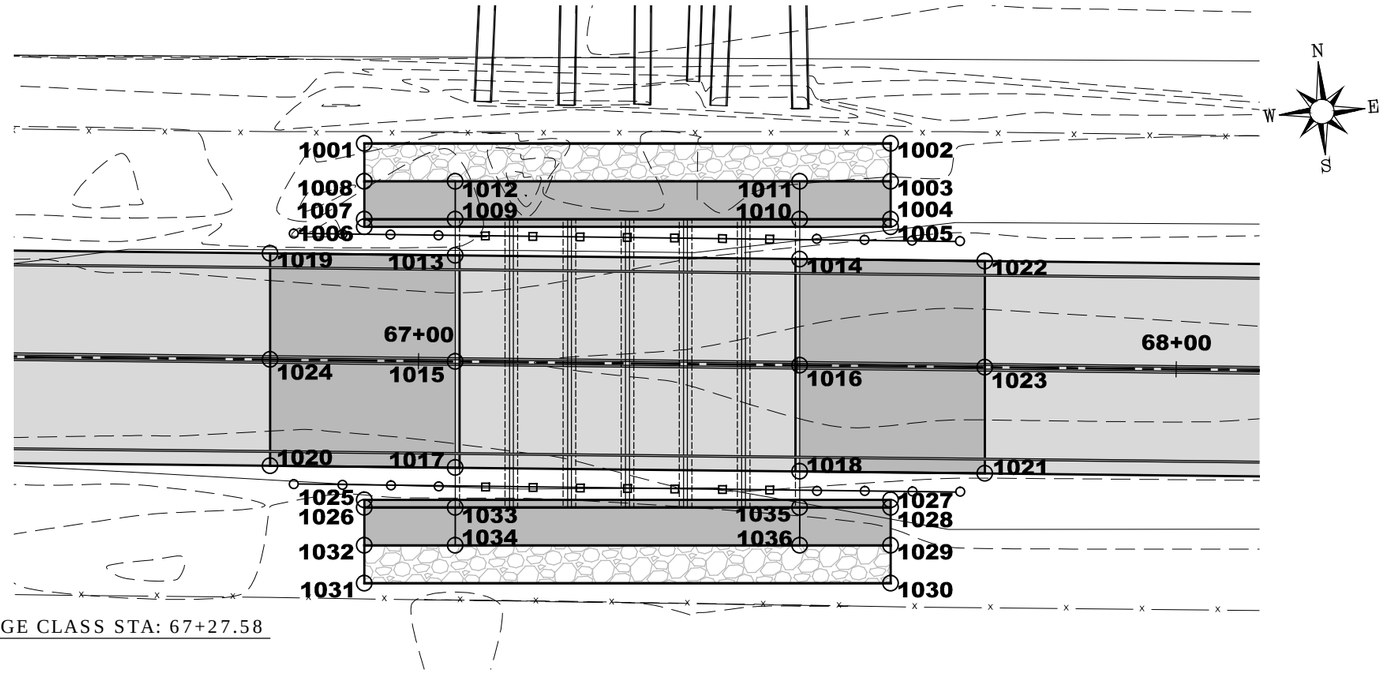

ESPEJO GATES PLAN BRIDGE CLASS STA: 67+27.58

SCALE: 1" = 20'

COORDINATE POINT TABLE

No.	Northing	Easting	Description
1001	17324856.3613	607544.2092	TR
1002	17324851.1551	607613.4738	TR
1003	17324846.1691	607613.0991	TC
1004	17324841.1832	607612.7243	TW
1005	17324840.1860	607612.6494	TW
1006	17324845.3922	607543.3848	TW
1007	17324846.3894	607543.4597	TW
1008	17324851.3753	607543.8345	TC
1009	17324845.4905	607555.4185	FL
1010	17324842.0826	607600.7581	FL
1011	17324847.0686	607601.1328	FL
1012	17324850.4759	607555.8007	FL
1013	17324840.7495	607555.0624	TP
1014	17324836.8528	607600.3729	TP
1015	17324826.7972	607554.0147	TP
1016	17324822.8913	607599.3244	TP
1017	17324812.8265	607552.9656	TP
1018	17324808.9287	607598.2759	TP
1019	17324842.8419	607530.7332	TC
1020	17324814.9179	607528.6352	TC

COORDINATE POINT TABLE

No.	Northing	Easting	Description
1021	17324806.8375	607622.6041	TC
1022	17324834.7605	607624.7021	TC
1023	17324820.8086	607623.6538	TC
1024	17324828.8804	607529.6842	TC
1025	17324809.4923	607540.6889	TW
1026	17324808.4951	607540.6140	TW
1027	17324804.2881	607609.9537	TW
1028	17324803.2909	607609.8788	TW
1029	17324798.3049	607609.5042	TC
1030	17324793.3190	607609.1295	TR
1031	17324798.5232	607539.8648	TR
1032	17324803.5092	607540.2394	TC
1033	17324807.5972	607552.5729	FL
1034	17324802.6101	607552.2057	FL
1035	17324804.1888	607597.9199	FL
1036	17324799.2040	607597.5379	FL

TR= TOP OF ROCK
TC= TOP OF CONCRETE
TW= TOP OF WALL
FL= FLOW LINE
TP= TOP OF PAVEMENT

NO.	DATE	DESCRIPTION
1	---	---
2	---	---

REVISION

PLOTTED 6-6-2016

STATUS FINAL

STATE OF TEXAS
FRANCISCO RAMOS
108833
PROFESSIONAL LICENSED ENGINEER

DRAWN BY O.C. CHECKED BY J.A.M.

6/6/2016

S&B INFRASTRUCTURE, LTD.
2120 BLAINE ST. LAREDO, TEXAS 78043
TELEPHONE: (956) 568-2561 FAX: (956) 994-0022
ENGINEERING # F-1582 SURVEYING # 10193914

ESPEJO GATES
WEBB COUNTY, TEXAS

STA 67+27.58
COORDINATES

REFERENCE FILE NAME
-
DRAWING FILE NAME
U2338-MBC-9 COOR

L:\PROJECTS\WEBB COUNTY\U2338\Webb County TXDOT CERTEZ\dwg\COORDINATE DETAILS\U2338-MBC-9 COOR.dwg

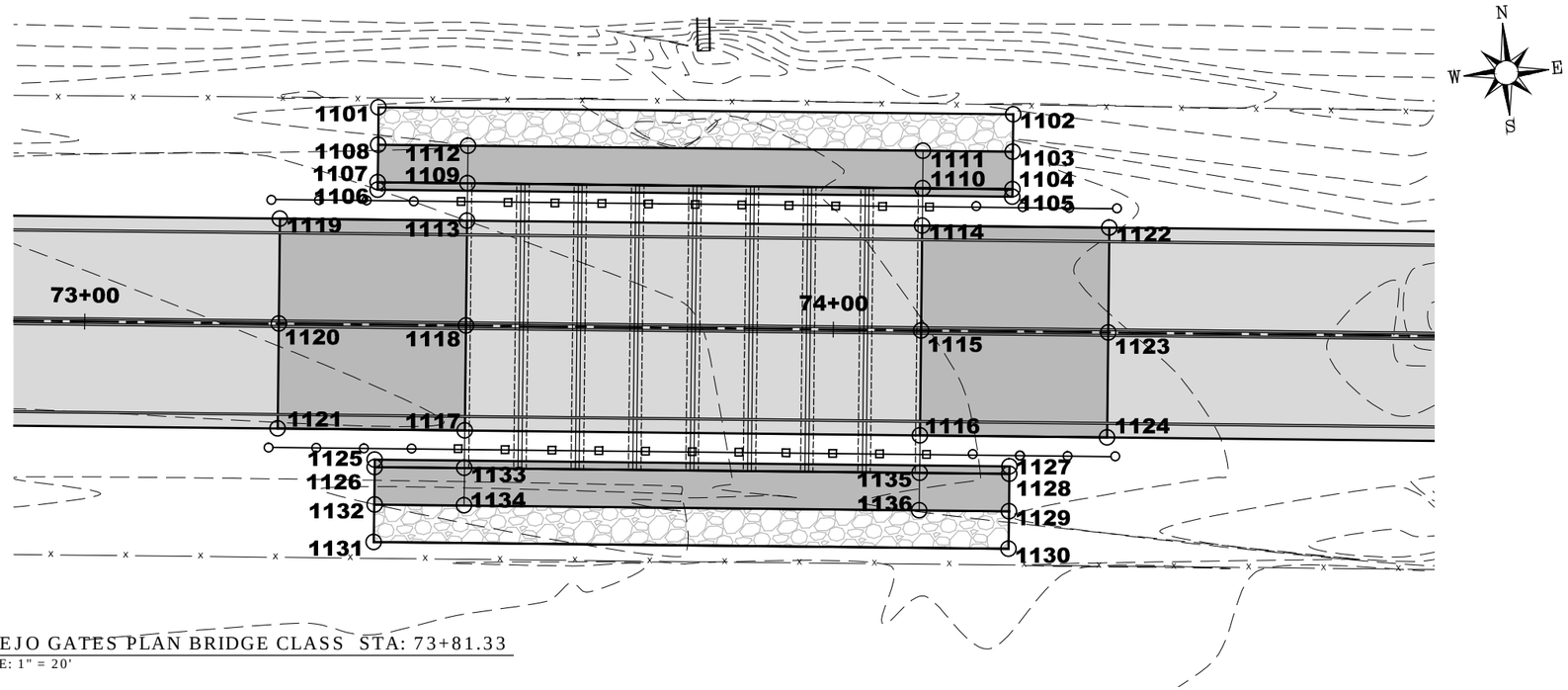

ESPEJO GATES PLAN BRIDGE CLASS STA: 73+81.33

SCALE: 1" = 20'

COORDINATE POINT TABLE			
No.	*Northing*	*Easting*	*Description*
1101	17324801.3504	608188.2625	TR
1102	17324794.0834	608272.7305	TR
1103	17324789.1018	608272.3019	T
1104	17324784.1202	608271.8733	TW
1105	17324783.1239	608271.7876	TW
1106	17324790.3909	608187.3197	TW
1107	17324791.3873	608187.4053	TW
1108	17324796.3689	608187.8339	T
1109	17324790.3587	608199.3612	FL
1110	17324785.1479	608259.9294	FL
1111	17324790.1304	608260.3459	FL
1112	17324795.3403	608199.7896	FL
1113	17324785.3771	608198.9209	TP
1114	17324780.1671	608259.5013	TP
1115	17324766.2184	608258.3043	TP
1116	17324752.2672	608257.1045	TP
1117	17324757.4799	608196.5243	TP
1118	17324771.4284	608197.7239	TP
1119	17324787.5188	608174.0178	TC
1120	17324773.5703	608172.8182	TC

COORDINATE POINT TABLE			
No.	*Northing*	*Easting*	*Description*
1121	17324759.6191	608171.6184	TC
1122	17324778.0250	608284.4096	TC
1123	17324764.0765	608283.2100	TC
1124	17324750.1280	608282.0103	TC
1125	17324754.5233	608184.2350	TW
1126	17324753.5270	608184.1493	TW
1127	17324747.2563	608268.7030	TW
1128	17324746.2600	608268.6173	TW
1129	17324741.2784	608268.1887	TC
1130	17324736.2968	608267.7601	TR
1131	17324743.5638	608183.2922	TR
1132	17324748.5369	608183.7774	TC
1133	17324752.4993	608196.0947	FL
1134	17324747.5168	608195.6767	FL
1135	17324747.2875	608256.6749	FL
1136	17324742.3070	608256.2330	FL

TR= TOP OF ROCK
TC= TOP OF CONCRETE
TW= TOP OF WALL
FL= FLOW LINE
TP= TOP OF PAVEMENT

NO.	DATE	DESCRIPTION
1	---	---
2	---	---

REVISION

PLOTTED 6-6-2016

STATUS FINAL

STATE OF TEXAS
FRANCISCO RAMOS
108833
LICENSED
PROFESSIONAL ENGINEER

DRAWN BY O.C. CHECKED BY J.A.M.

6/6/2016

S&B INFRASTRUCTURE, LTD.
2120 BLAINE ST. LAREDO, TEXAS 78043
TELEPHONE: (956) 568-2561 FAX: (956) 994-0022
ENGINEERING # F-1582 SURVEYING # 10193914

ESPEJO GATES
WEBB COUNTY, TEXAS

STA 73+81.33
COORDINATES

REFERENCE FILE NAME
-
DRAWING FILE NAME
U2338-MBC-10 COOR

L:\PROJECTS\WEBB COUNTY\U2338\Webb County TXDOT CERTEZ\dwg\COORDINATE DETAILS\U2338-MBC-10 COOR.dwg

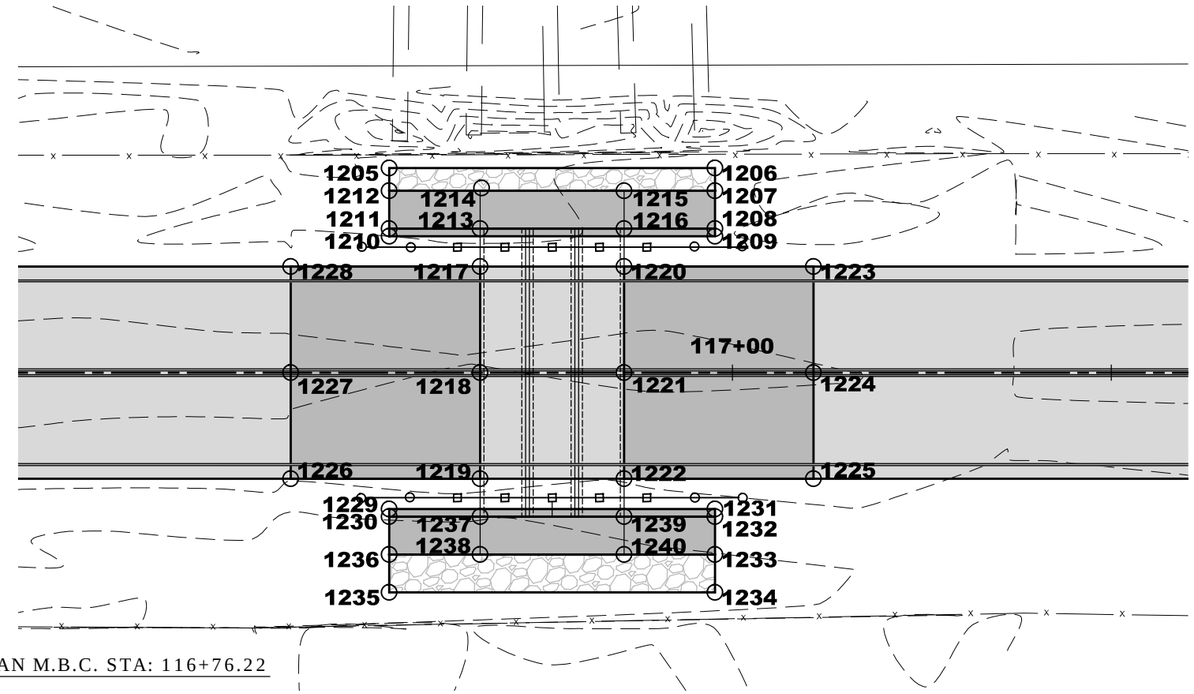

ESPEJO GATES PLAN M.B.C. STA: 116+76.22

SCALE: 1" = 20'

COORDINATE POINT TABLE			
No.	*Northing*	*Easting*	*Description*
1205	17324254.0202	612461.7263	TR
1206	17324242.5325	612503.1634	TR
1207	17324239.6415	612502.3619	TC
1208	17324234.8232	612501.0261	TW
1209	17324233.8596	612500.7590	TW
1210	17324245.3473	612459.3219	TW
1211	17324246.3109	612459.5890	TW
1212	17324251.1292	612460.9248	TC
1213	17324243.1051	612471.1529	FL
1214	17324248.2472	612472.7663	FL
1215	17324242.8474	612490.7981	FL
1216	17324238.0291	612489.4623	FL
1217	17324238.2868	612469.8171	TP
1218	17324224.7956	612466.0769	TP
1219	17324211.3045	612462.3367	TP
1220	17324233.2108	612488.1265	TP
1221	17324219.7197	612484.3863	TP
1222	17324206.2285	612480.6462	TP
1223	17324226.5319	612512.2178	TC
1224	17324213.0408	612508.4777	TC

COORDINATE POINT TABLE			
No.	*Northing*	*Easting*	*Description*
1225	17324199.5496	612504.7375	TC
1226	17324217.9834	612438.2454	TC
1227	17324231.4745	612441.9856	TC
1228	17324244.9657	612445.7258	TC
1229	17324210.6558	612449.7043	TW
1230	17324209.6921	612449.4371	TW
1231	17324199.1681	612491.1414	TW
1232	17324198.2044	612490.8742	TW
1233	17324193.3861	612489.5384	TC
1234	17324188.5679	612488.2027	TR
1235	17324200.0556	612446.7656	TR
1236	17324204.8738	612448.1013	TC
1237	17324206.4862	612461.0010	FL
1238	17324201.6680	612459.6652	FL
1239	17324201.4103	612479.3104	FL
1240	17324196.5920	612477.9746	FL

TR= TOP OF ROCK
TC= TOP OF CONCRETE
TW= TOP OF WALL
FL= FLOW LINE
TP= TOP OF PAVEMENT

REVISION		
NO.	DATE	DESCRIPTION
1	---	---
2	---	---

PLOTTED 6-6-2016

STATUS FINAL

STATE OF TEXAS
FRANCISCO RAMOS
108833
LICENSED PROFESSIONAL ENGINEER

DRAWN BY O.C. CHECKED BY J.A.M.

6/6/2016

S&B INFRASTRUCTURE, LTD.
4001 MCPHERSON SUITE 204 LAREDO, TEXAS 78041
TELEPHONE: (956) 568-2561 FAX: (956) 994-0022
ENGINEERING # F-1582 SURVEYING # 10193914

ESPEJO GATES
WEBB COUNTY, TEXAS

STA:116+76.22
COORDINATES

REFERENCE FILE NAME
-
DRAWING FILE NAME
U2338-MBC-11 COOR

L:\PROJECTS\WEBB COUNTY\U2338\Webb County TXDOT CERTEZ\dwg\COORDINATE DETAILS\U2338-MBC-11 COOR.dwg

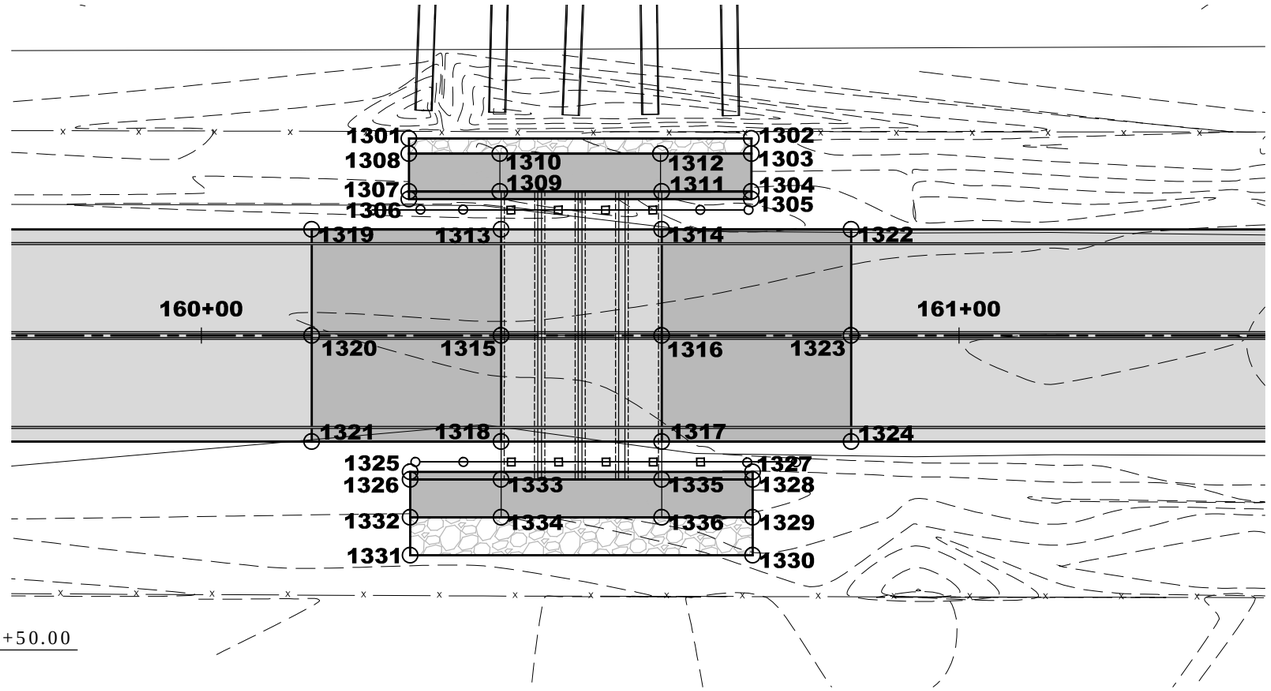

ESPEJO GATES PLAN M.B.C. STA: 160+50.00

SCALE: 1" = 20'

COORDINATE POINT TABLE			
No.	*Northing*	*Easting*	*Description*
1301	17323084.8724	616675.2090	TR
1302	17323072.7929	616718.7581	TR
1303	17323070.8657	616718.2235	TC
1304	17323066.0476	616716.8871	TW
1305	17323065.0840	616716.6198	TW
1306	17323077.1635	616673.0707	TW
1307	17323078.1271	616673.3380	TW
1308	17323082.9452	616674.6744	TC
1309	17323074.9197	616684.9014	FL
1310	17323079.7378	616686.2379	FL
1311	17323069.2105	616705.4843	
1312	17323074.0731	616706.6601	
1313	17323070.0557	616683.7252	TP
1314	17323064.3938	616704.1483	TP
1315	17323056.5645	616679.9851	TP
1316	17323050.9026	616700.4081	TP
1317	17323037.4089	616696.6672	TP
1318	17323043.0744	616676.2413	TP
1319	17323076.7339	616659.6362	TC
1320	17323063.2428	616655.8960	TC

COORDINATE POINT TABLE			
No.	*Northing*	*Easting*	*Description*
1321	17323049.7491	616652.1551	TC
1322	17323057.7155	616728.2373	TC
1323	17323044.2244	616724.4971	TC
1324	17323030.7332	616720.7569	TC
1325	17323042.4287	616663.6091	TW
1326	17323041.4651	616663.3418	TW
1327	17323030.3492	616707.1582	TW
1328	17323029.3856	616706.8909	TW
1329	17323024.5675	616705.5545	TC
1330	17323019.7494	616704.2181	TR
1331	17323031.8289	616660.6690	TR
1332	17323036.6470	616662.0054	T
1333	17323038.2577	616674.9052	FL
1334	17323033.4396	616673.5688	FL
1335	17323032.5930	616695.3275	FL
1336	17323027.7749	616693.9911	FL

TR= TOP OF ROCK
TC= TOP OF CONCRETE
TW= TOP OF WALL
FL= FLOW LINE
TP= TOP OF PAVEMENT

L:\PROJECTS\WEBB COUNTY\U2338\Webb County TXDOT CERTEZ\dwg\COORDINATE DETAILS\U2338-MBC-12 COOR.dwg

NO.	DATE	DESCRIPTION
1	---	---
2	---	---

REVISION

PLOTTED 6-6-2016

STATUS FINAL

STATE OF TEXAS
FRANCISCO RAMOS
108833
LICENSED PROFESSIONAL ENGINEER

DRAWN BY O.C. CHECKED BY J.A.M.

6/6/2016

S&B INFRASTRUCTURE, LTD.
2120 BLAINE ST. LAREDO, TEXAS 78043
TELEPHONE: (956) 568-2561 FAX: (956) 994-0027
ENGINEERING # F-1582 SURVEYING # 10193914

ESPEJO GATES
WEBB COUNTY, TEXAS

STA 160+50.00
COORDINATES

REFERENCE FILE NAME
-
DRAWING FILE NAME
U2338-MBC-12 COOR

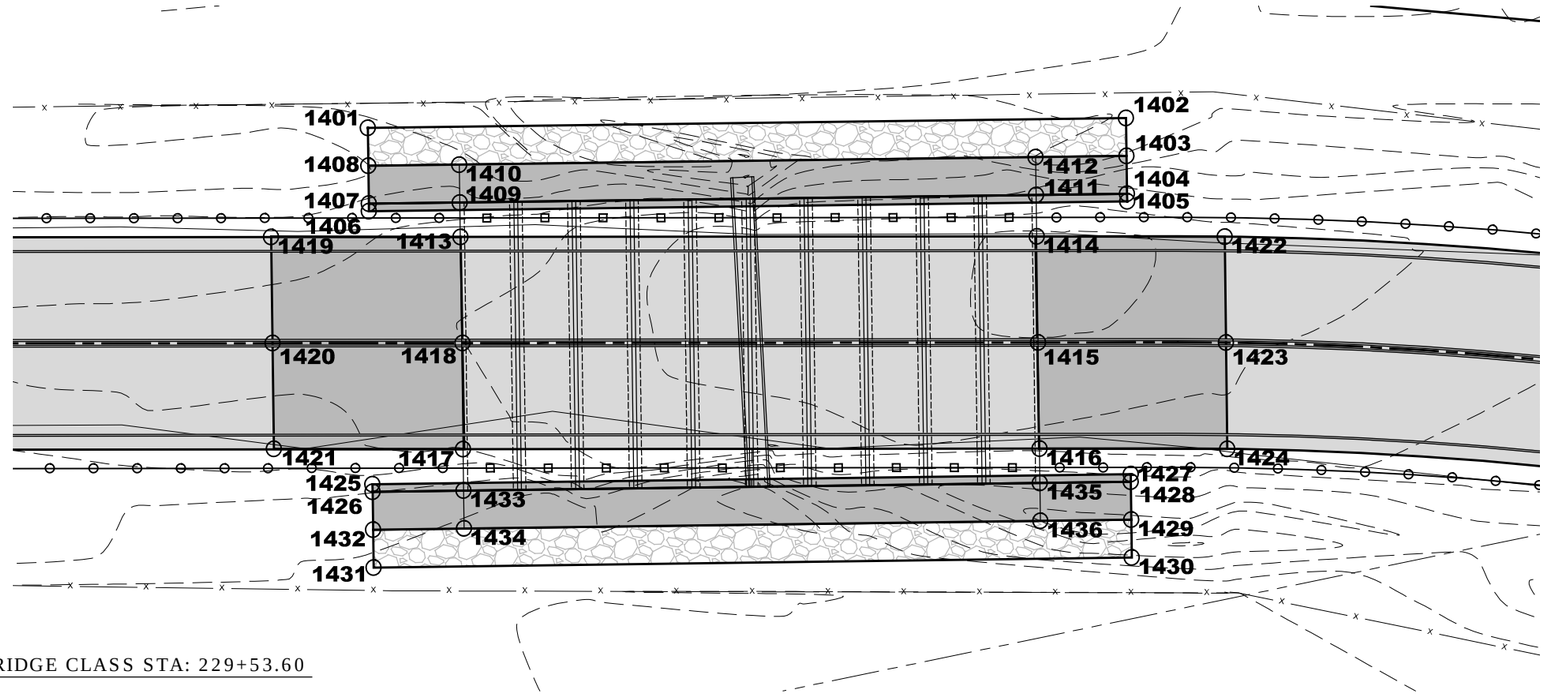

ESPEJO GATES PLAN BRIDGE CLASS STA: 229+53.60
SCALE: 1" = 20'

COORDINATE POINT TABLE			
No.	*Northing*	*Easting*	*Description*
1401	17320448.1484	622669.9590	TR
1402	17320473.7576	622766.7277	TR
1403	17320468.9240	622768.0069	TC
1404	17320464.0904	622769.2860	TW
1405	17320463.1237	622769.5419	TW
1406	17320437.5145	622672.7732	TW
1407	17320438.4812	622672.5174	TW
1408	17320443.3148	622671.2382	TC
1409	17320441.5512	622684.1180	FL
1410	17320446.3848	622682.8388	FL
1411	17320461.0204	622757.6854	FL
1412	17320465.8540	622756.4062	FL
1413	17320437.1843	622685.3388	FL
1414	17320455.7369	622759.0836	TP
1415	17320442.2023	622762.6655	TP
1416	17320428.6658	622766.2478	TP
1417	17320410.0988	622692.4417	TP
1418	17320423.6655	622688.9853	TP
1419	17320431.0850	622661.0950	TC
1420	17320417.5467	622664.6644	TC

COORDINATE POINT TABLE			
No.	*Northing*	*Easting*	*Description*
1421	17320404.0689	622668.2179	TC
1422	17320461.7276	622783.1532	TC
1423	17320448.2115	622786.7168	TC
1424	17320434.6502	622790.2922	TC
1425	17320402.7125	622681.9833	TW
1426	17320401.7458	622682.2391	TW
1427	17320428.3217	622778.7520	TW
1428	17320427.3550	622779.0078	TW
1429	17320422.5214	622780.2870	TC
1430	17320417.6878	622781.5662	T
1431	17320392.0786	622684.7975	T
1432	17320396.9122	622683.5183	TC
1433	17320404.8159	622693.8398	FL
1434	17320399.9823	622695.1189	FL
1435	17320424.2850	622767.4072	FL
1436	17320419.4514	622768.6864	FL

TR= TOP OF ROCK
TC= TOP OF CONCRETE
TW= TOP OF WALL
FL= FLOW LINE
TP= TOP OF PAVEMENT

L:\PROJECTS\WEBB COUNTY\U2338\Webb County TXDOT CERTEZ\dwg\COORDINATE DETAILS\U2338-MBC-13 COOR.dwg

REVISION		
NO.	DATE	DESCRIPTION
1	---	---
2	---	---

PLOTTED 6-6-2016
STATUS FINAL

STATE OF TEXAS
FRANCISCO RAMOS
108833
LICENSED PROFESSIONAL ENGINEER

DRAWN BY O.C.
CHECKED BY J.A.M.

S&B INFRASTRUCTURE, LTD.
2120 BLAINE ST. LAREDO, TEXAS 78043
TELEPHONE: (956) 568-2561 FAX: (956) 994-0427
ENGINEERING # F-1582 SURVEYING # 10193914

ESPEJO GATES
WEBB COUNTY, TEXAS

STA 229+53.60
COORDINATES

REFERENCE FILE NAME
-
DRAWING FILE NAME
U2338-MBC-13 COOR

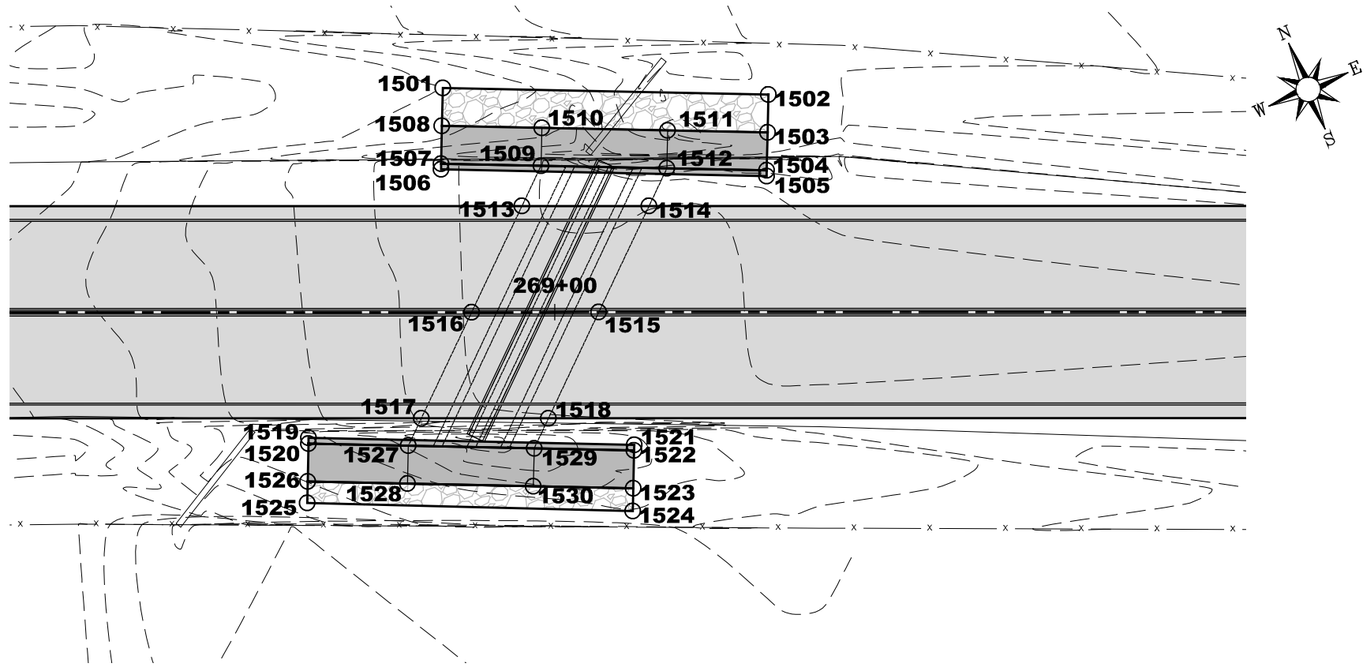

ESPEJO GATES PLAN R.C.P. STA: 269+00.00

SCALE: 1" = 20'

COORDINATE POINT TABLE			
No.	Northing	Easting	Description
1501	17318787.1865	626238.9586	TR
1502	17318769.5889	626278.1599	TR
1503	17318765.0274	626276.1123	TC
1504	17318760.4659	626274.0646	TW
1505	17318759.7817	626273.7574	TW
1506	17318777.3793	626234.5561	TW
1507	17318778.0636	626234.8633	TW
1508	17318782.6250	626236.9109	TC
1509	17318772.6661	626246.8869	FL
1510	17318777.2276	626248.9346	FL
1511	17318770.4249	626264.0886	FL
1512	17318765.8634	626262.0409	FL
1513	17318768.7532	626242.4874	TP
1514	17318762.2042	626257.9266	TP
1515	17318751.9075	626246.3491	TP
1516	17318758.4565	626230.9099	TP
1517	17318748.1598	626219.3324	TP
1518	17318741.6108	626234.7716	TP
1519	17318751.5930	626204.6289	TW
1520	17318750.9090	626204.3212	TW

COORDINATE POINT TABLE			
No.	Northing	Easting	Description
1521	17318733.9659	626243.8169	TW
1522	17318733.2820	626243.5093	TW
1523	17318728.7220	626241.4582	TC
1524	17318725.9907	626240.2174	TR
1525	17318743.7634	626201.0951	TR
1526	17318746.3491	626202.2701	TC
1527	17318745.5014	626216.3434	FL
1528	17318740.9489	626214.2757	FL
1529	17318738.6896	626231.4871	FL
1530	17318734.1297	626229.4360	FL

TR= TOP OF ROCK
TC= TOP OF CONCRETE
TW= TOP OF WALL
FL= FLOW LINE
TP= TOP OF PAVEMENT

REVISION		
NO.	DATE	DESCRIPTION
1	---	---
2	---	---

PLOTTED 6-6-2016

STATUS FINAL

STATE OF TEXAS
FRANCISCO RAMOS
108833
LICENSED PROFESSIONAL ENGINEER

DRAWN BY O.C. CHECKED BY J.A.M.

6/6/2016

S&B INFRASTRUCTURE, LTD.
2120 BLAINE ST. LAREDO, TEXAS 78043
TELEPHONE: (956) 568-2561 FAX: (956) 994-0022
ENGINEERING # F-1582 SURVEYING # 10193914

ESPEJO GATES
WEBB COUNTY, TEXAS

STA 269+00.00
COORDINATES

REFERENCE FILE NAME
-
DRAWING FILE NAME
U2338-RCP-14 COOR

L:\PROJECTS\WEBB COUNTY\U2338\Webb County TXDOT CERTEZ\dwg\COORDINATE DETAILS\U2338-RCP-14 COOR.dwg

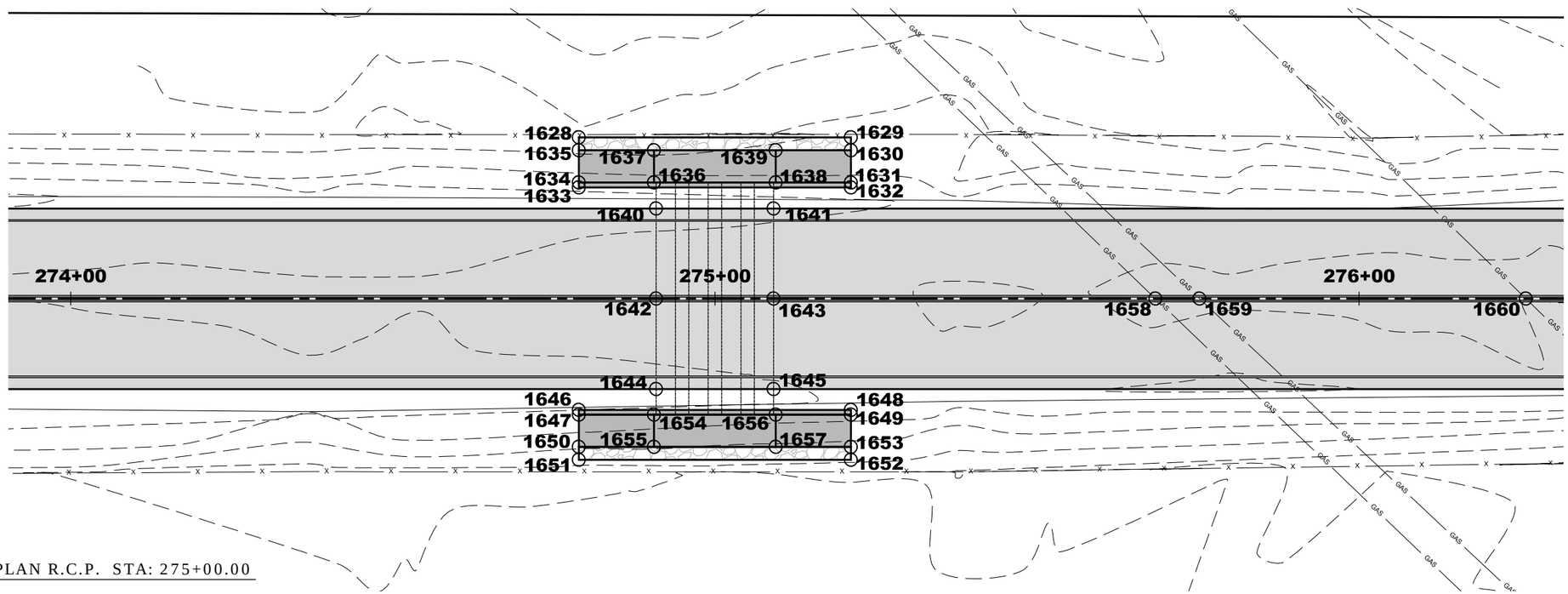

ESPEJO GATES PLAN R.C.P. STA: 275+00.00
SCALE: 1" = 20'

COORDINATE POINT TABLE			
No.	*Northing*	*Easting*	*Description*
1628	17318546.8886	626782.1280	TR
1629	17318530.0277	626820.8569	TR
1630	17318528.1940	626820.0586	TC
1631	17318523.6096	626818.0627	TW
1632	17318522.9219	626817.7634	TW
1633	17318539.7828	626779.0344	TW
1634	17318540.4704	626779.3338	TW
1635	17318545.0548	626781.3296	TC
1636	17318535.8135	626790.0307	FL
1637	17318540.3979	626792.0266	FL
1638	17318528.2665	626807.3658	FL
1639	17318532.8509	626809.3617	FL
1640	17318531.9923	626788.7307	TP
1641	17318524.7115	626805.4546	TP
1642	17318519.1762	626783.1512	TP
1643	17318511.8962	626799.8753	TP
1644	17318506.3197	626777.5540	TP
1645	17318499.0389	626794.2779	TP
1646	17318508.1505	626765.2631	TW
1647	17318507.4628	626764.9638	TW

COORDINATE POINT TABLE			
No.	*Northing*	*Easting*	*Description*
1648	17318491.2896	626803.9921	TW
1649	17318490.6020	626803.6927	TW
1650	17318502.8784	626762.9679	TC
1651	17318501.0447	626762.1696	TR
1652	17318484.1838	626800.8985	TR
1653	17318486.0176	626801.6968	TC
1654	17318502.8059	626775.6607	FL
1655	17318498.2215	626773.6648	FL
1656	17318495.2589	626792.9958	FL
1657	17318490.6745	626790.9999	FL
1658	17318488.2363	626854.2282	PL CROSSING
1659	17318485.5152	626860.4792	PL CROSSING
1660	17318465.2889	626906.9443	PL CROSSING

TR= TOP OF ROCK
TC= TOP OF CONCRETE
TW= TOP OF WALL
FL= FLOW LINE
TP= TOP OF PAVEMENT
PL= PIPELINE CROSSING

NO.	DATE	DESCRIPTION
1	---	---
2	---	---

REVISION

PLOTTED 6-6-2016

STATUS FINAL

STATE OF TEXAS
FRANCISCO RAMOS
108833
PROFESSIONAL LICENSED ENGINEER

DRAWN BY O.C. CHECKED BY J.A.M.

6/6/2016

S&B INFRASTRUCTURE, LTD.
2120 BLAINE ST. LAREDO, TEXAS 78043
TELEPHONE: (956) 568-2561 FAX: (956) 994-0422
ENGINEERING # F-1582 SURVEYING # 10193914

ESPEJO GATES
WEBB COUNTY, TEXAS

STA 275+00.00
COORDINATES

REFERENCE FILE NAME
-
DRAWING FILE NAME
U2338-RCP-15 COOR

L:\PROJECTS\WEBB COUNTY\U2338\Webb County TXDOT CERTEZ\dwg\COORDINATE DETAILS\U2338-RCP-15 COOR.dwg

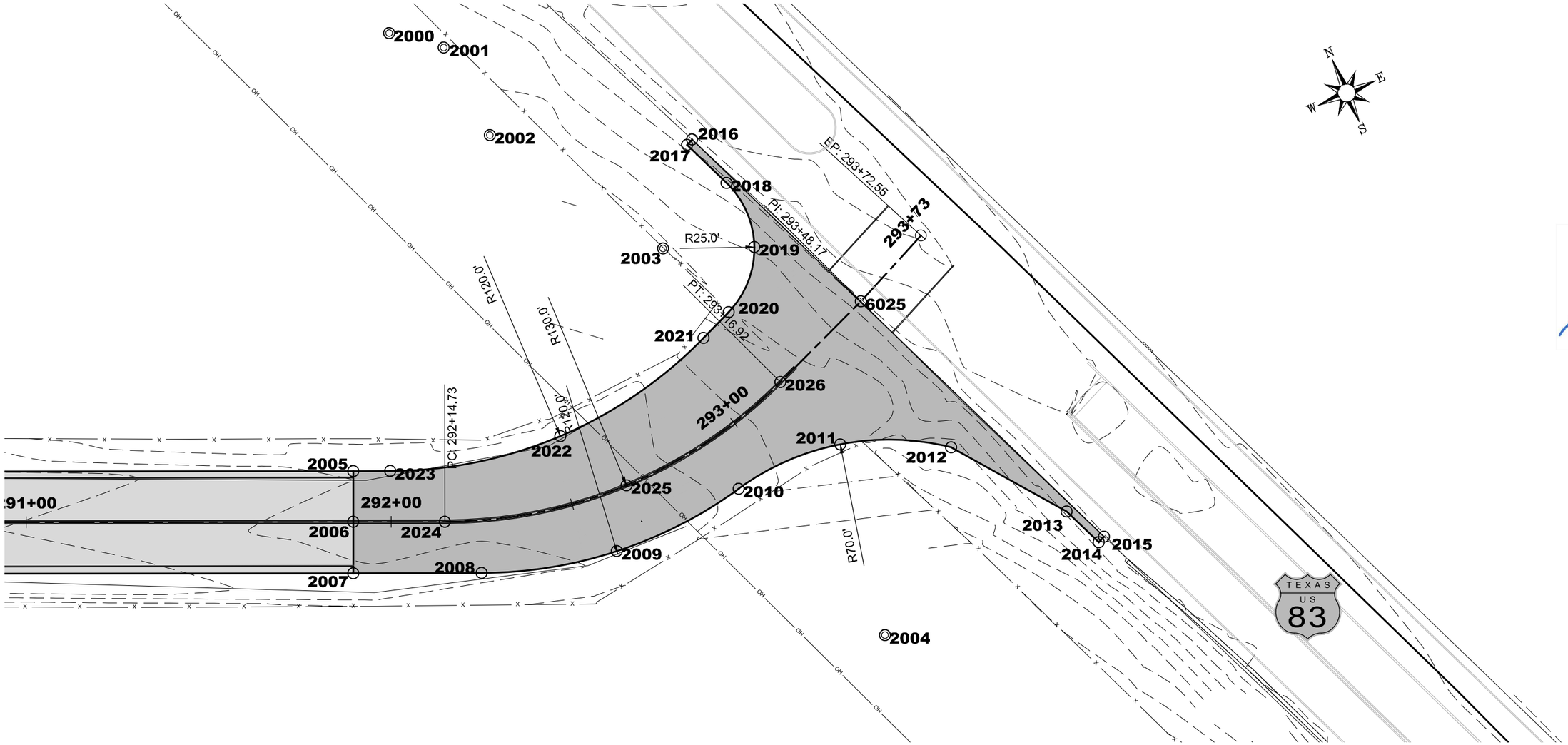

ESPEJO GATES COORDINATES INTERSECTION I-83

SCALE: 1" = 30'

COORDINATE POINT TABLE			
No.	*Northing*	*Easting*	*Description*
2000	17317959.9376	628403.3231	120 R
2001	17317950.3168	628415.4581	120 R
2002	17317923.2420	628417.4561	130 R
2003	17317875.7901	628448.5231	25 R
2004	17317754.3779	628461.8272	70 R
2005	17317853.8988	628346.2976	TC
2006	17317841.1522	628340.7483	TC
2007	17317828.2262	628335.1209	TC
2008	17317814.2472	628367.3434	PC
2009	17317804.8797	628403.6707	MID

COORDINATE POINT TABLE			
No.	*Northing*	*Easting*	*Description*
2010	17317807.1874	628441.1153	PT/ PC
2011	17317807.1812	628471.4931	MID
2012	17317794.3068	628499.0077	PT
2013	17317765.5181	628521.0122	TC
2014	17317754.2583	628525.6514	TC
2015	17317755.0830	628527.6075	TC
2016	17317899.9688	628467.7466	TC
2017	17317899.1681	628465.9034	TC
2018	17317885.2991	628471.6176	PC
2019	17317866.1412	628471.5717	MID

COORDINATE POINT TABLE			
No.	*Northing*	*Easting*	*Description*
2020	17317852.6410	628457.9788	PT
2021	17317848.9018	628448.8502	PC
2022	17317839.9536	628402.1312	MID
2023	17317849.8605	628355.6060	PT
2024	17317831.1427	628363.7428	PC
2025	17317820.3592	628413.3503	MID
2026	17317829.3971	628463.3054	PT
6025	17317840.8579	628492.3783	TC

PC= POINT OF COMMENCEMENT
PT= POINT OF TERMINATION
MID= MID POINT OF CURVE
TC= TOP OF CONCRETE
R= RADIUS

REVISION		
NO.	DATE	DESCRIPTION
1	---	---
2	---	---

PLOTTED 6-6-2016

STATUS FINAL

STATE OF TEXAS
FRANCISCO RAMOS
108833
LICENSED PROFESSIONAL ENGINEER

DRAWN BY O.C. CHECKED BY F.R.

6/6/2016

S&B INFRASTRUCTURE, LTD.
2120 BLAINE ST. LAREDO, TEXAS 78043
TELEPHONE: (956) 568-2561 FAX: (956) 994-0042
ENGINEERING # F-1582 SURVEYING # 10193914

ESPEJO GATES
WEBB COUNTY, TEXAS
TCDP# 713110

I-83 INTERSECTION COORDINATES

REFERENCE FILE NAME -

DRAWING FILE NAME U2338- I83 INTERSECTION COOR

SHEET NUMBER 63.1 OF 152

L:\PROJECTS\WEBB COUNTY\U2338\Webb County TXDOT CERTEZ\dwg\COORDINATE DETAILS\U2338- I83 INTERSECTION COOR.dwg

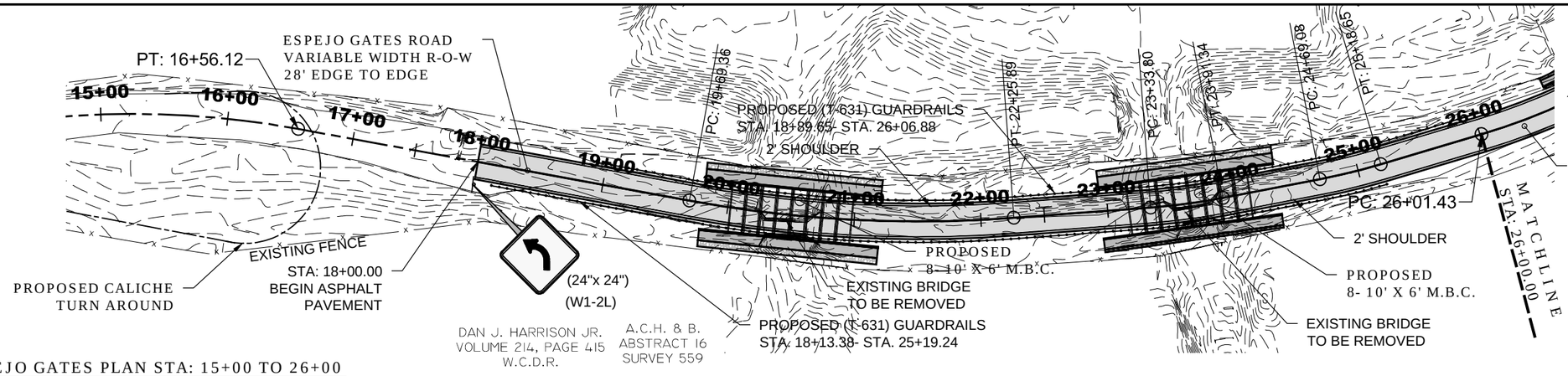

ESPEJO GATES PLAN STA: 15+00 TO 26+00

SCALE: 1" = 100'

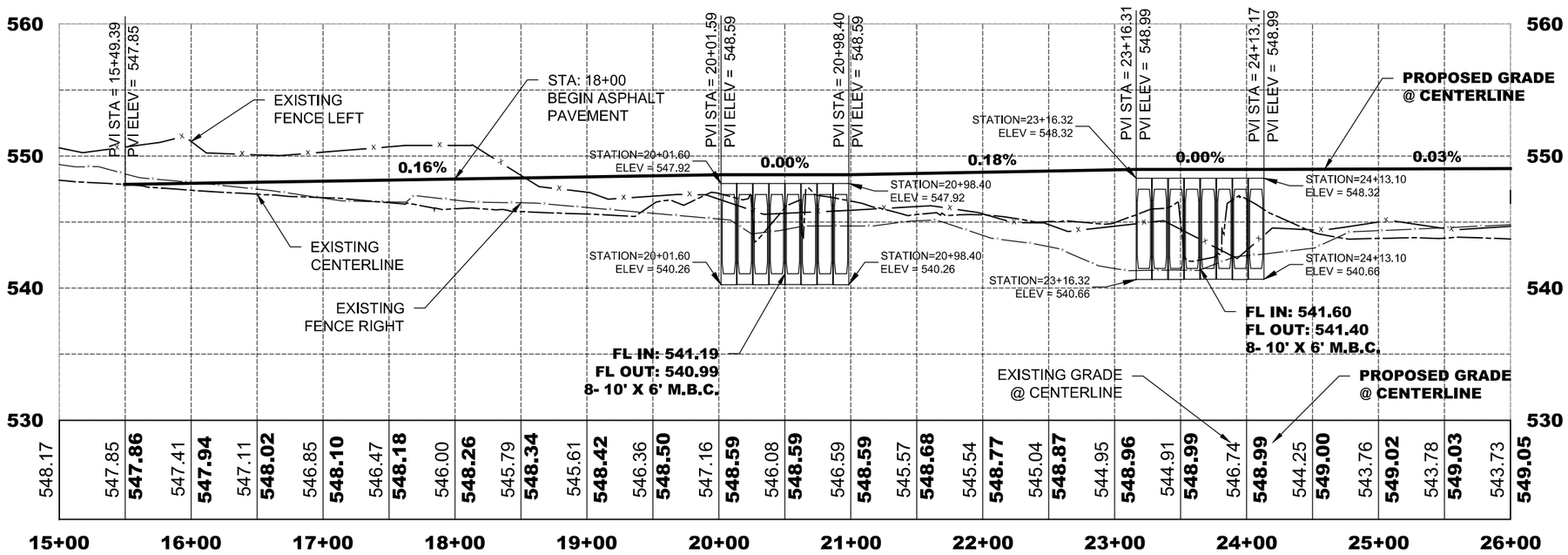

ESPEJO GATES PROFILE STA: 15+00 TO 26+00

HORIZONTAL SCALE: 1" = 100'

VERTICAL SCALE: 1" = 10'

SUPER ELEVATION TRANSITION MAX e = 6%										
CURVE ID	PI STA	RADIUS FT	DESIGN SPEED MPH	e %	RUNOUT	RUNOFF	PC STA. OF CURVE	PT STA. OF CURVE	RUNOFF	RUNOUT
ESP C2	20+98.33	1000	30	3.5%	18+68.76	19+05.36	19+69.36	22+25.89	22+89.89	23+26.49
ESP C3	23+62.60	500	30	4.8%	-	-	23+33.80	23+91.34	-	-
ESP C4	24+93.89	500	30	4.8%	-	-	24+69.08	25+18.65	-	-

NOTES:

1. W1-2 (CURVE SIGNS) HAVE A DISTANCE OF 180' BEFORE TURN BEGINS
2. W1-8 HAVE 80' BETWEEN EACH
3. USE PW-1 FOR HEAD WALL

CALL BEFORE YOU DIG!
TEXAS ONE CALL PARTICIPANTS REQUEST 48 HOURS NOTICE BEFORE YOU DIG DRILL, OR BLAST - STOP, CALL!
TEXAS ONE CALL SYSTEM
811
Know what's below. Call before you dig.

UTILITY DEPARTMENTS
LAREDO, TEXAS

ELECTRIC COMPANY
A. E. P.
(956) 721-3169

ELECTRIC COMPANY
MEDINA ELECTRIC
(361) 747-5444

TELEPHONE COMPANY
AT&T
(956) 727-6749

CABLE COMPANY
TIME WARNER CABLE
(956) 721-0600

LEGEND

PROPOSED ASPHALT PAVEMENT
PROPOSED CONCRETE
EXISTING UNPAVED ROAD
EXISTING CONCRETE
OH — EXISTING OVERHEAD POWER LINE
X — EXISTING FENCE
GAS — EXISTING GAS LINE
EXISTING BOUNDARY LINE
400' EXISTING CONTOUR LINE
PP EXISTING POWER POLE
EXISTING TELEPHONE PED
EXISTING SIGN

NO.	DATE	DESCRIPTION
1	---	---
2	---	---

PLOTTED 6-6-2016

STATUS FINAL

STATE OF TEXAS
FRANCISCO RAMOS
108833
LICENSED
PROFESSIONAL ENGINEER

DRAWN BY O.C. CHECKED BY J.A.M.

6/6/2016

S&B INFRASTRUCTURE, LTD.
2120 BLAINE ST. LAREDO, TEXAS 78043
TELEPHONE: (956) 568-2561 FAX: (956) 994-0027
ENGINEERING # F-1582 SURVEYING # 10193914

ESPEJO GATES
WEBB COUNTY, TEXAS

ESPEJO GATES
STA: 15+00 TO 26+00
PLAN & PROFILE

REFERENCE FILE NAME
-
DRAWING FILE NAME
U2338-Plan&Profile.SHT 1-4

SHEET NUMBER 64 OF 152

L:\PROJECTS\WEBB COUNTY\U2338\Webb County TXDOT CERTEZ\dwg\SHEETS\11-17-2015-FINAL ORDER\4- PLAN AND PROFILE\Alignment Sheets\U2338-Plan&Profile.SHT 1-4.dwg

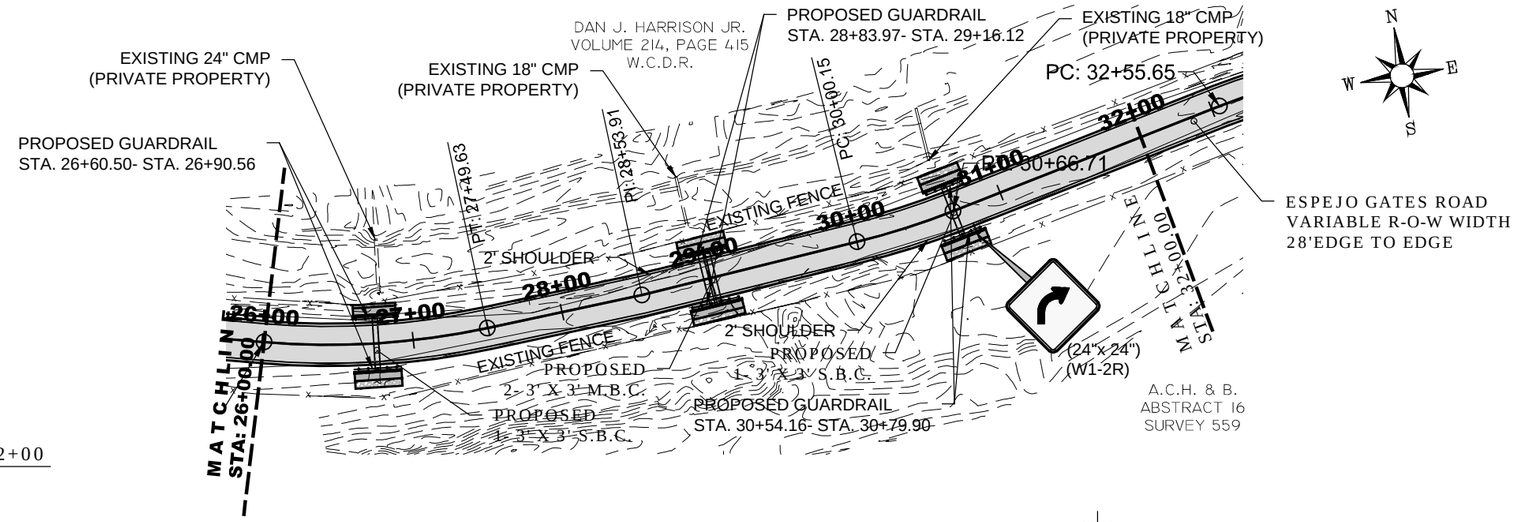

ESPEJO GATES PLAN STA: 26+00 TO 32+00

SCALE: 1" = 100'

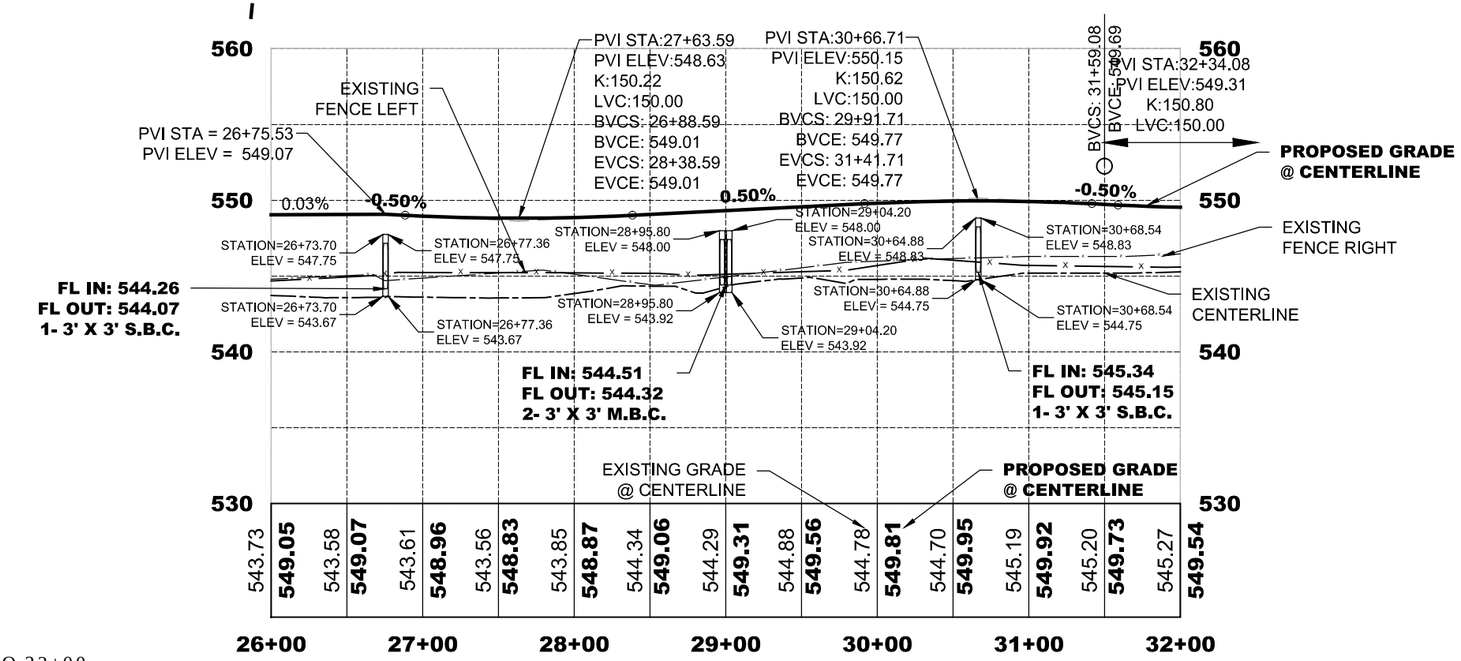

ESPEJO GATES PROFILE STA: 26+00 TO 32+00

HORIZONTAL SCALE: 1" = 100'
VERTICAL SCALE: 1" = 10'

SUPER ELEVATION TRANSITION MAX e = 6%

CURVE ID	PI STA	RADIUS FT	DESIGN SPEED MPH	e%	RUNOUT	RUNOFF	PC STA. OF CURVE	PT STA. OF CURVE	RUNOFF	RUNOUT
ESP C5	26+76.08	500	30	4.8%	-	-	26+01.43	27+49.63	-	-
ESP C6	28+53.91	500	30	4.8%	-	-	30+00.15	30+66.71	31+53.71	32+00.46

NOTES:

1. W1-2 (CURVE SIGNS) HAVE A DISTANCE OF 180' BEFORE TURN BEGINS
2. W1-8 HAVE 80' BETWEEN EACH
3. USE PW-1 FOR HEAD WALL

CALL BEFORE YOU DIG!
TEXAS ONE CALL PARTICIPANTS REQUEST 48 HOURS NOTICE BEFORE YOU DIG DRILL, OR BLAST - STOP, CALL!
TEXAS ONE CALL SYSTEM
811
Know what's below. Call before you dig.

UTILITY DEPARTMENTS
LAREDO, TEXAS

ELECTRIC COMPANY
A. E. P.
(956) 721-3169

ELECTRIC COMPANY
MEDINA ELECTRIC
(361) 747-5444

TELEPHONE COMPANY
AT&T
(956) 727-6749

CABLE COMPANY
TIME WARNER CABLE
(956) 721-0600

LEGEND

PROPOSED ASPHALT PAVEMENT
PROPOSED CONCRETE
EXISTING UNPAVED ROAD
EXISTING CONCRETE
OH — EXISTING OVERHEAD POWER LINE
X — EXISTING FENCE
GAS — EXISTING GAS LINE
EXISTING BOUNDARY LINE
400' — EXISTING CONTOUR LINE
PP — EXISTING POWER POLE
EXISTING TELEPHONE PED
EXISTING SIGN

NO.	DATE	REVISION DESCRIPTION
1	---	---
2	---	---

PLOTTED 6-6-2016
STATUS FINAL

STATE OF TEXAS
FRANCISCO RAMOS
108833
LICENSED PROFESSIONAL ENGINEER

DRAWN BY O.C. CHECKED BY J.A.M.

6/6/2016

S&B INFRASTRUCTURE, LTD.
2120 BLAINE ST. LAREDO, TEXAS 78043
TELEPHONE: (956) 568-2561 FAX: (956) 994-0027
ENGINEERING # F-1582 SURVEYING # 10193914

ESPEJO GATES
WEBB COUNTY, TEXAS

ESPEJO GATES
STA: 26+00 TO 32+00
PLAN & PROFILE

REFERENCE FILE NAME -
DRAWING FILE NAME U2338-Plan&Profile.SHT 1-4

L:\PROJECTS\WEBB COUNTY\U2338\Webb County TXDOT CERTEZ\dwg\SHEETS\11-17-2015-FINAL ORDER\4- PLAN AND PROFILE\Alignment Sheets\U2338-Plan&Profile.SHT 1-4.dwg

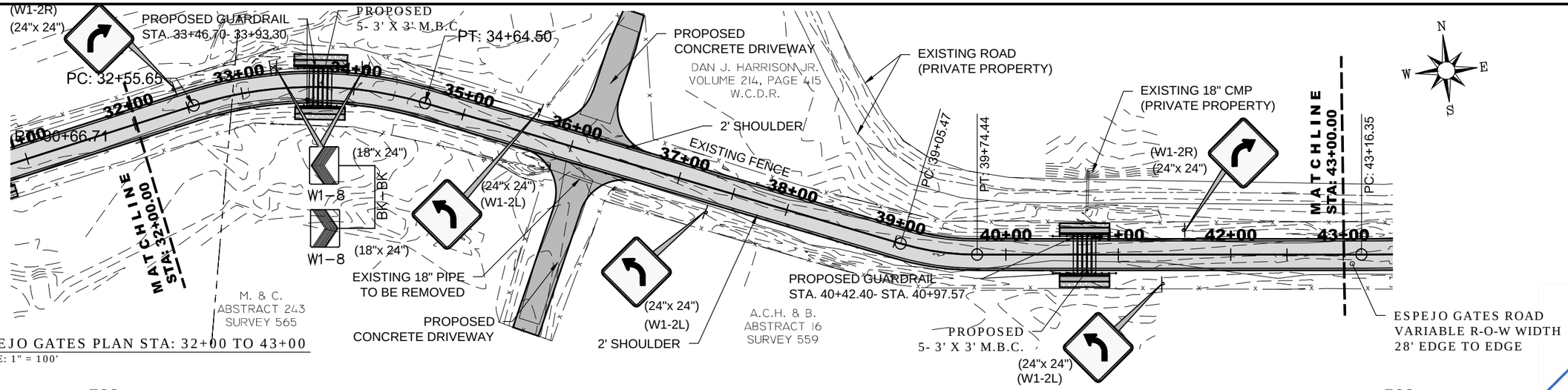

ESPEJO GATES PLAN STA: 32+00 TO 43+00

SCALE: 1" = 100'

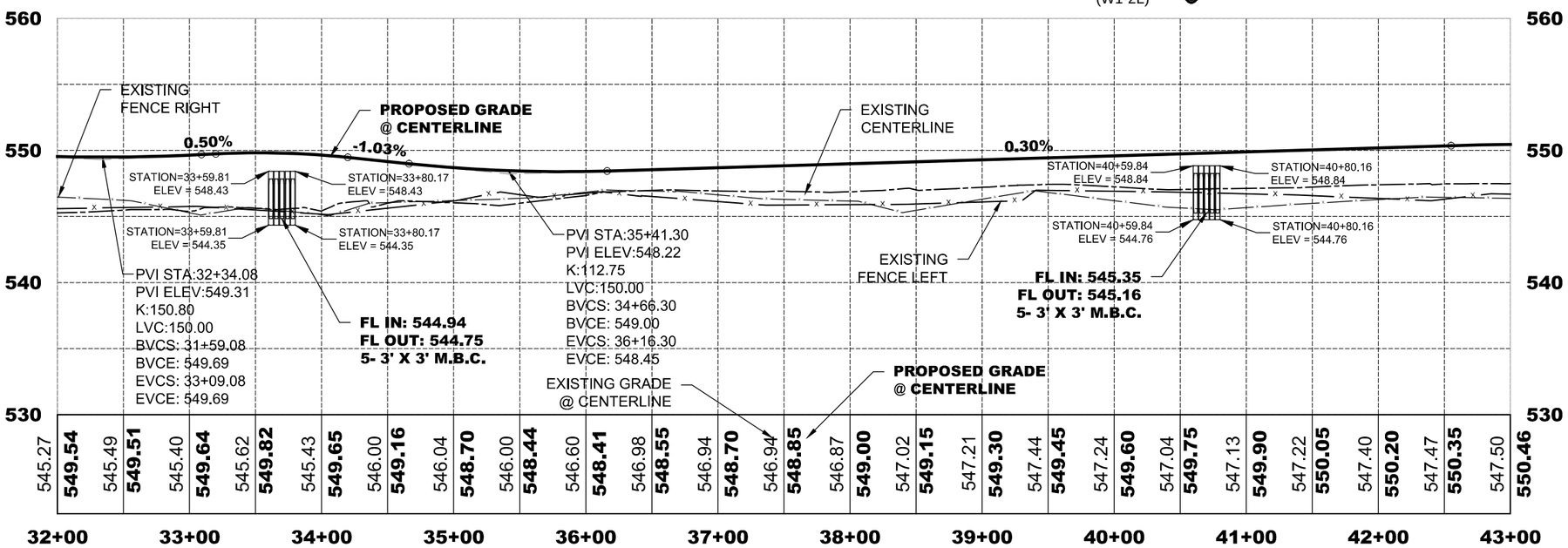

ESPEJO GATES PROFILE STA: 32+00 TO 43+00

HORIZONTAL SCALE: 1" = 100'

VERTICAL SCALE: 1" = 10'

SUPER ELEVATION TRANSITION MAX e = 6%										
CURVE ID	PI STA	RADIUS FT	DESIGN SPEED MPH	e%	RUNOUT	RUNOFF	PC STA. OF CURVE	PT STA. OF CURVE	RUNOFF	RUNOUT
ESP C7	33+63.29	350	30	5.5%	31+19.25	31+55.65	32+55.65	34+64.50	35+64.50	36+00.90
ESP C8	39+40.19	240	30	6.0%	37+60.17	37+96.47	39+05.47	39+74.44	40+83.44	41+19.74

NOTES:

1. W1-2 (CURVE SIGNS) HAVE A DISTANCE OF 180' BEFORE TURN BEGINS
2. W1-8 HAVE 80' BETWEEN EACH
3. USE PW-1 FOR HEAD WALL

CALL BEFORE YOU DIG!
TEXAS ONE CALL PARTICIPANTS REQUEST 48 HOURS NOTICE BEFORE YOU DIG DRILL, OR BLAST - STOP, CALL!
TEXAS ONE CALL SYSTEM
811
Know what's below. Call before you dig.

UTILITY DEPARTMENTS
LAREDO, TEXAS

ELECTRIC COMPANY
A. E. P.
(956) 721-3169

ELECTRIC COMPANY
MEDINA ELECTRIC
(361) 747-5444

TELEPHONE COMPANY
AT&T
(956) 727-6749

CABLE COMPANY
TIME WARNER CABLE
(956) 721-0600

LEGEND

PROPOSED ASPHALT PAVEMENT
PROPOSED CONCRETE
EXISTING UNPAVED ROAD
EXISTING CONCRETE
OH — EXISTING OVERHEAD POWER LINE
X — EXISTING FENCE
GAS — EXISTING GAS LINE
EXISTING BOUNDARY LINE
400' EXISTING CONTOUR LINE
PP EXISTING POWER POLE
EXISTING TELEPHONE PED
EXISTING SIGN

NO.	DATE	DESCRIPTION
1	---	---
2	---	---

PLOTTED 6-6-2016

STATUS FINAL

STATE OF TEXAS
FRANCISCO RAMOS
108833
LICENSED PROFESSIONAL ENGINEER

DRAWN BY O.C. CHECKED BY J.A.M.

6/6/2016

S&B INFRASTRUCTURE, LTD.
2120 BLAINE ST. LAREDO, TEXAS 78043
TELEPHONE: (956) 568-2561 FAX: (956) 994-0027
ENGINEERING # F-1582 SURVEYING # 10193914

ESPEJO GATES
WEBB COUNTY, TEXAS

ESPEJO GATES
STA: 32+00 TO 43+00
PLAN & PROFILE

REFERENCE FILE NAME -
DRAWING FILE NAME U2338-Plan&Profile.SHT 1-4

SHEET NUMBER 66 OF 152

L:\PROJECTS\WEBB COUNTY\U2338\Webb County TXDOT CERTEZ\dwg\SHEETS\11-17-2015-FINAL ORDER\4- PLAN AND PROFILE\Alignment Sheets\U2338-Plan&Profile.SHT 1-4.dwg

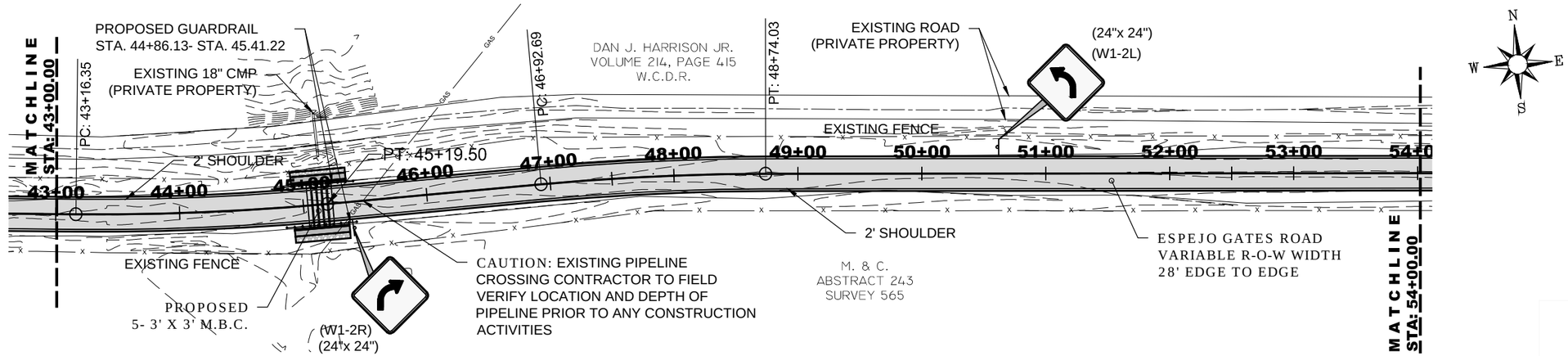

ESPEJO GATES PLAN STA: 43+00 TO 54+00

SCALE: 1" = 100'

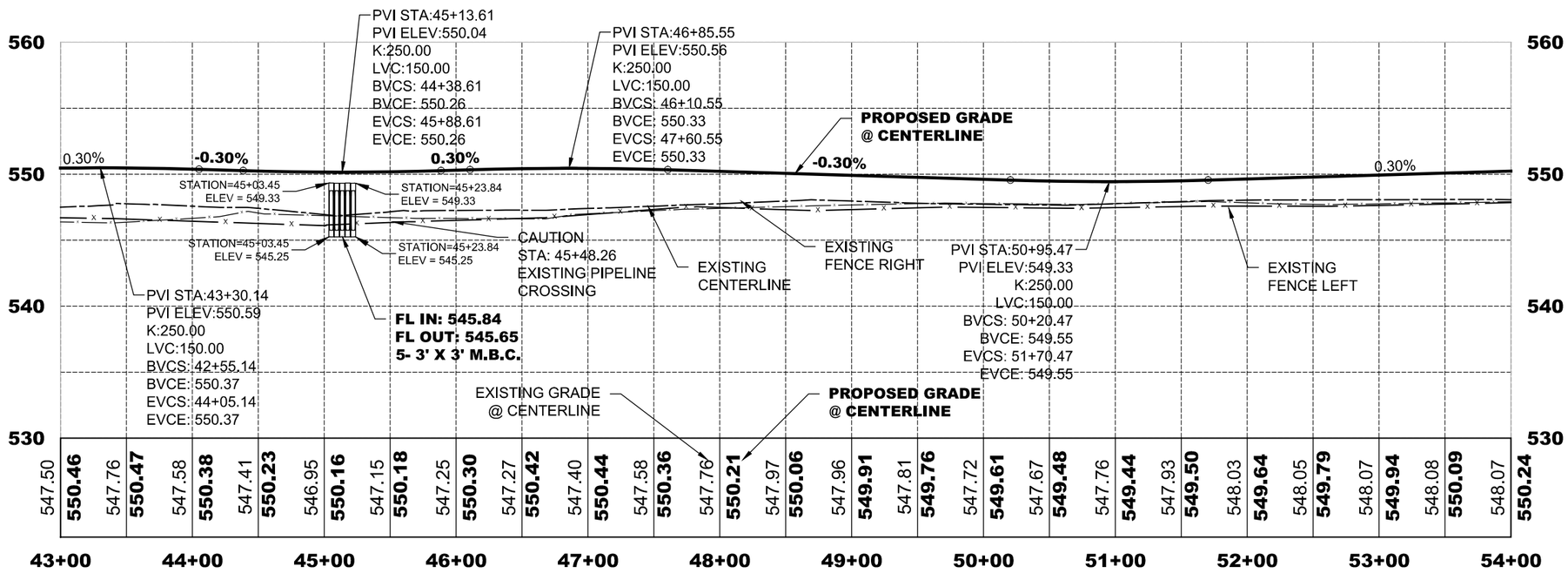

ESPEJO GATES PROFILE STA: 43+00 TO 54+00

HORIZONTAL SCALE: 1" = 100'

VERTICAL SCALE: 1" = 10'

SUPER ELEVATION TRANSITION MAX e = 6%										
CURVE ID	PI STA	RADIUS FT	DESIGN SPEED MPH	e%	RUNOUT	RUNOFF	PC STA. OF CURVE	PT STA. OF CURVE	RUNOFF	RUNOUT
ESP C9	44+18.02	2000	30	2.2	42+39.95	42+76.35	43+16.35	45+19.50	45+59.50	45+95.90
ESP C10	47+83.42	2000	30	2.2	46+16.29	46+52.69	46+92.69	48+74.03	49+14.03	49+50.43

NOTES:

1. W1-2 (CURVE SIGNS) HAVE A DISTANCE OF 180' BEFORE TURN BEGINS
2. W1-8 HAVE 80' BETWEEN EACH
3. USE PW-1 FOR HEAD WALL

CALL BEFORE YOU DIG!
TEXAS ONE CALL PARTICIPANTS REQUEST 48 HOURS NOTICE BEFORE YOU DIG DRILL, OR BLAST - STOP, CALL!
TEXAS ONE CALL SYSTEM
811
Know what's below. Call before you dig.

UTILITY DEPARTMENTS
LAREDO, TEXAS

ELECTRIC COMPANY
A. E. P.
(956) 721-3169

ELECTRIC COMPANY
MEDINA ELECTRIC
(361) 747-5444

TELEPHONE COMPANY
AT&T
(956) 727-6749

CABLE COMPANY
TIME WARNER CABLE
(956) 721-0600

LEGEND

PROPOSED ASPHALT PAVEMENT
PROPOSED CONCRETE
EXISTING UNPAVED ROAD
EXISTING CONCRETE
OH — EXISTING OVERHEAD POWER LINE
X — EXISTING FENCE
GAS — EXISTING GAS LINE
EXISTING BOUNDARY LINE
400' — EXISTING CONTOUR LINE
PP — EXISTING POWER POLE
EXISTING TELEPHONE PED
EXISTING SIGN

NO.	DATE	DESCRIPTION
1	---	---
2	---	---

PLOTTED 6-6-2016

STATUS FINAL

STATE OF TEXAS
FRANCISCO RAMOS
108833
LICENSED PROFESSIONAL ENGINEER

DRAWN BY O.C. CHECKED BY J.A.M.

6/6/2016

S&B INFRASTRUCTURE, LTD.
2120 BLAINE ST. LAREDO, TEXAS 78043
TELEPHONE: (956) 568-2561 FAX: (956) 994-0027
ENGINEERING # F-1582 SURVEYING # 10193914

ESPEJO GATES
WEBB COUNTY, TEXAS

ESPEJO GATES
STA: 43+00 TO 54+00
PLAN & PROFILE

REFERENCE FILE NAME -

DRAWING FILE NAME U2338-Plan&Profile.SHT 1-4

L:\PROJECTS\WEBB COUNTY\U2338\Webb County TXDOT CERTEZ\dwg\SHEETS\11-17-2015-FINAL ORDER\4- PLAN AND PROFILE\Alignment Sheets\U2338-Plan&Profile.SHT 1-4.dwg

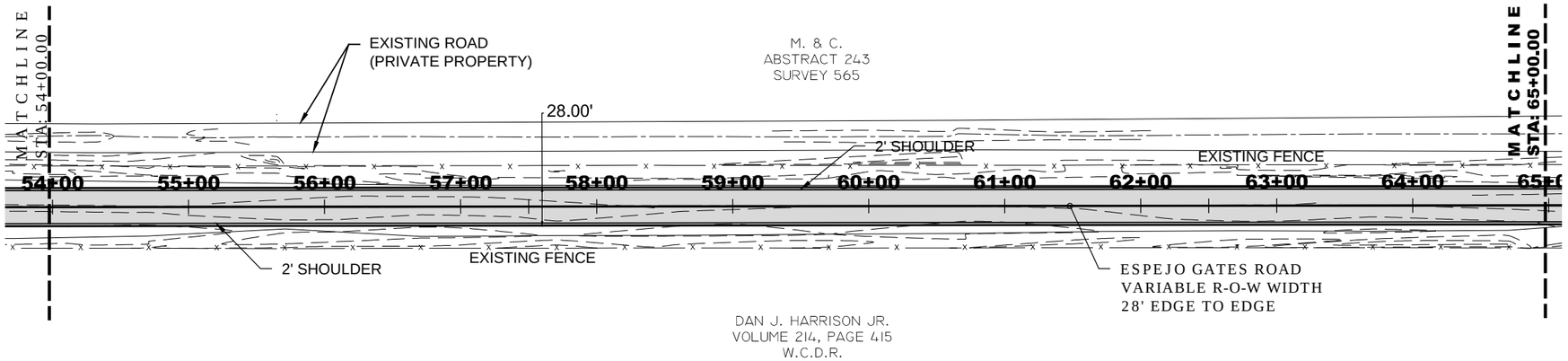

ESPEJO GATES PLAN STA: 54+00 TO 65+00

SCALE: 1" = 100'

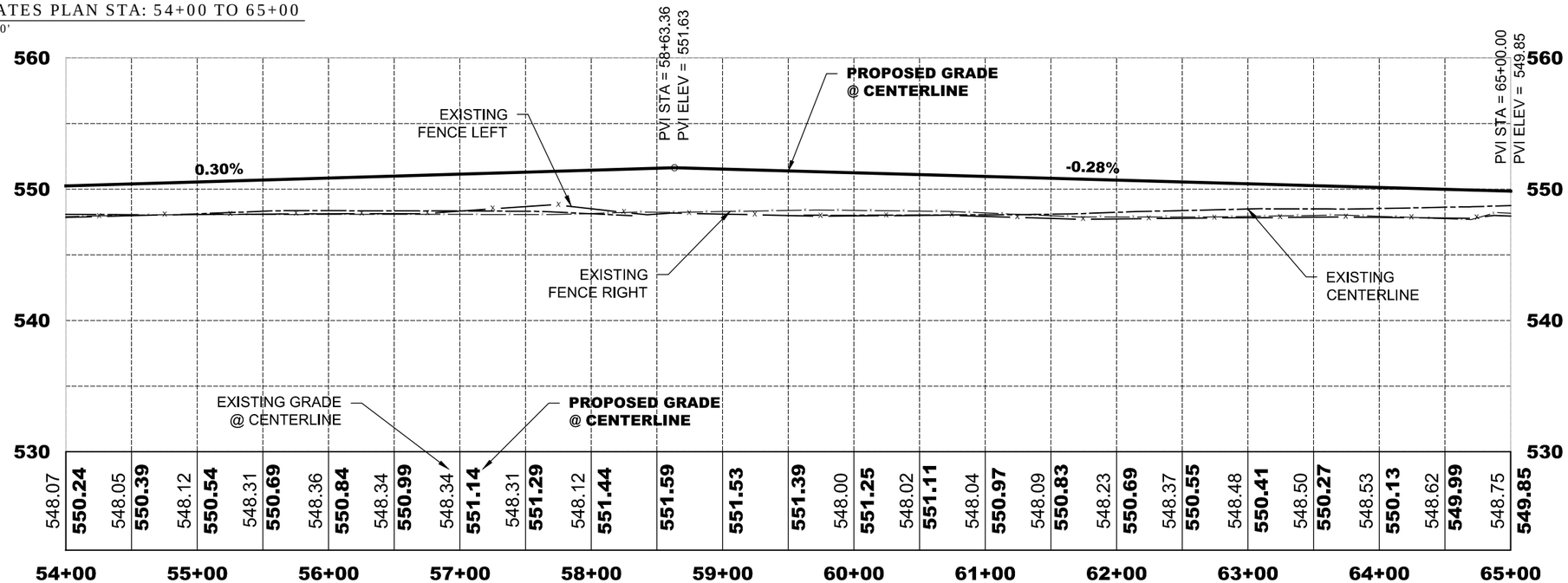

ESPEJO GATES PROFILE STA: 54+00 TO 65+00

HORIZONTAL SCALE: 1" = 100'
VERTICAL SCALE: 1" = 10'

CALL BEFORE YOU DIG!
TEXAS ONE CALL PARTICIPANTS REQUEST
48 HOURS NOTICE BEFORE YOU DIG
DRILL, OR BLAST - STOP, CALL!
TEXAS ONE CALL SYSTEM
811
811 Know what's below. Call before you dig.

UTILITY DEPARTMENTS
LAREDO, TEXAS

ELECTRIC COMPANY
A. E. P.
(956) 721-3169

ELECTRIC COMPANY
MEDINA ELECTRIC
(361) 747-5444

TELEPHONE COMPANY
AT&T
(956) 727-6749

CABLE COMPANY
TIME WARNER CABLE
(956) 721-0600

LEGEND

- PROPOSED ASPHALT PAVEMENT
- PROPOSED CONCRETE
- EXISTING UNPAVED ROAD
- EXISTING CONCRETE
- OH — EXISTING OVERHEAD POWER LINE
- X — EXISTING FENCE
- GAS — EXISTING GAS LINE
- EXISTING BOUNDARY LINE
- 400' — EXISTING CONTOUR LINE
- PP — EXISTING POWER POLE
- EXISTING TELEPHONE PED
- EXISTING SIGN

NO.	DATE	REVISION DESCRIPTION
1	---	---
2	---	---

PLOTTED 6-6-2016
STATUS FINAL

STATE OF TEXAS
FRANCISCO RAMOS
108833
LICENSED PROFESSIONAL ENGINEER

DRAWN BY O.C. CHECKED BY J.A.M.

6/6/2016

S&B INFRASTRUCTURE, LTD.
2120 BLAINE ST. LAREDO, TEXAS 78043
TELEPHONE: (956) 568-2561 FAX: (956) 994-0027
ENGINEERING # F-1582 SURVEYING # 10193914

ESPEJO GATES
WEBB COUNTY, TEXAS

ESPEJO GATES
STA: 54+00 TO 65+00
PLAN & PROFILE

REFERENCE FILE NAME -
DRAWING FILE NAME U2338-Plan&Profile.SHT 5-8

L:\PROJECTS\WEBB COUNTY\U2338\Webb County TXDOT CERTEZ\dwg\SHEETS\11-17-2015-FINAL ORDER\4- PLAN AND PROFILE\Alignment Sheets\U2338-Plan&Profile.SHT 5-8.dwg

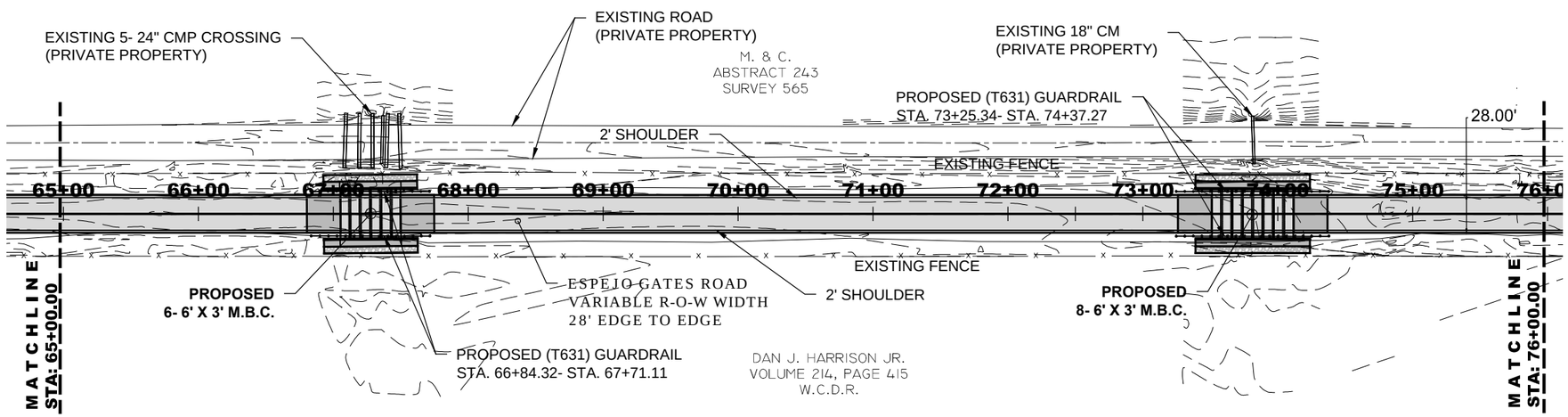

ESPEJO GATES PLAN STA: 65+00 TO 76+00

SCALE: 1" = 100'

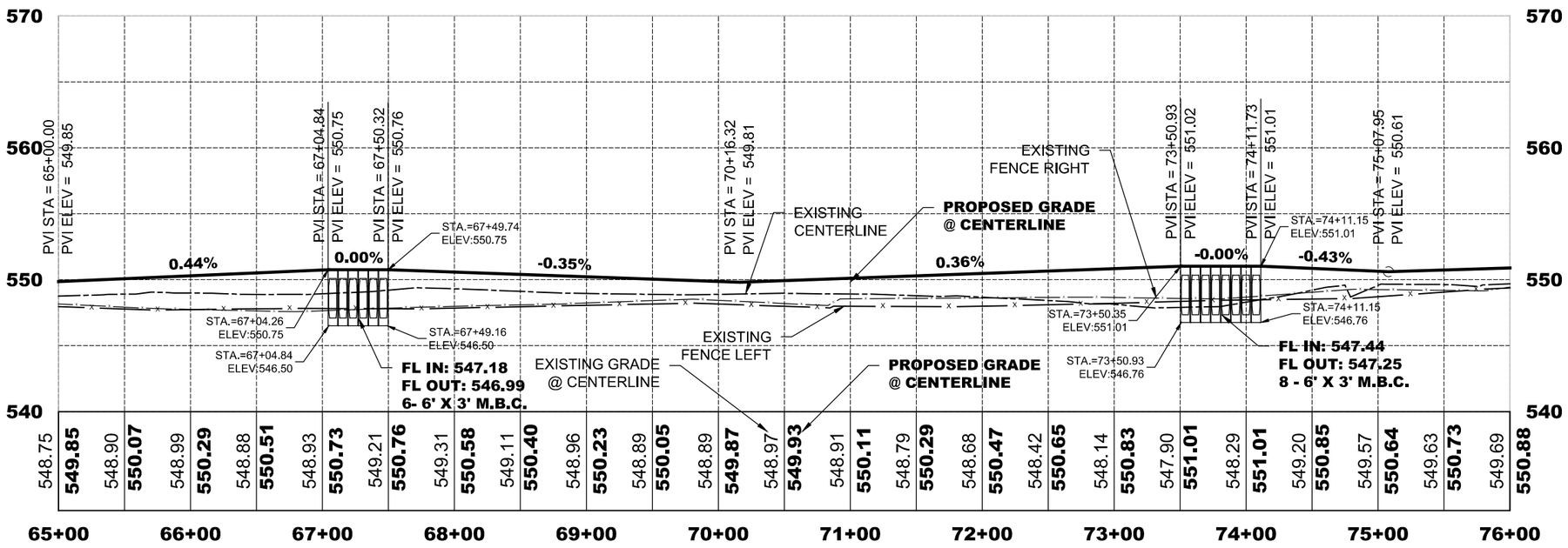

ESPEJO GATES PROFILE STA: 65+00 TO 76+00

HORIZONTAL SCALE: 1" = 100'

VERTICAL SCALE: 1" = 10'

NOTES:

1. USE PW-1 FOR HEAD WALL

CALL BEFORE YOU DIG!
TEXAS ONE CALL PARTICIPANTS REQUEST 48 HOURS NOTICE BEFORE YOU DIG DRILL, OR BLAST - STOP, CALL!
TEXAS ONE CALL SYSTEM
811
Know what's below. Call before you dig.

UTILITY DEPARTMENTS
LAREDO, TEXAS

ELECTRIC COMPANY
A. E. P.
(956) 721-3169

ELECTRIC COMPANY
MEDINA ELECTRIC
(361) 747-5444

TELEPHONE COMPANY
AT&T
(956) 727-6749

CABLE COMPANY
TIME WARNER CABLE
(956) 721-0600

LEGEND

PROPOSED ASPHALT PAVEMENT
PROPOSED CONCRETE
EXISTING UNPAVED ROAD
EXISTING CONCRETE
OH — EXISTING OVERHEAD POWER LINE
X — EXISTING FENCE
GAS — EXISTING GAS LINE
EXISTING BOUNDARY LINE
400' EXISTING CONTOUR LINE
PP EXISTING POWER POLE
EXISTING TELEPHONE PED
EXISTING SIGN

NO.	DATE	DESCRIPTION
1	---	---
2	---	---

REVISION

PLOTTED 6-6-2016

STATUS FINAL

STATE OF TEXAS
FRANCISCO RAMOS
108833
LICENSED PROFESSIONAL ENGINEER

DRAWN BY O.C. CHECKED BY J.A.M.

6/6/2016

S&B INFRASTRUCTURE, LTD.
2120 BLAINE ST. LAREDO, TEXAS 78043
TELEPHONE: (956) 568-2561 FAX: (956) 994-0027
ENGINEERING # F-1582 SURVEYING # 10193914

ESPEJO GATES
WEBB COUNTY, TEXAS

ESPEJO GATES
STA: 65+00.00 TO 76+00.00
PLAN & PROFILE

REFERENCE FILE NAME
-
DRAWING FILE NAME
U2338-Plan&Profile.SHT 5-8

L:\PROJECTS\WEBB COUNTY\U2338\Webb County TXDOT CERTEZ\dwg\SHEETS\11-17-2015-FINAL ORDER\4- PLAN AND PROFILE\Alignment Sheets\U2338-Plan&Profile.SHT 5-8.dwg

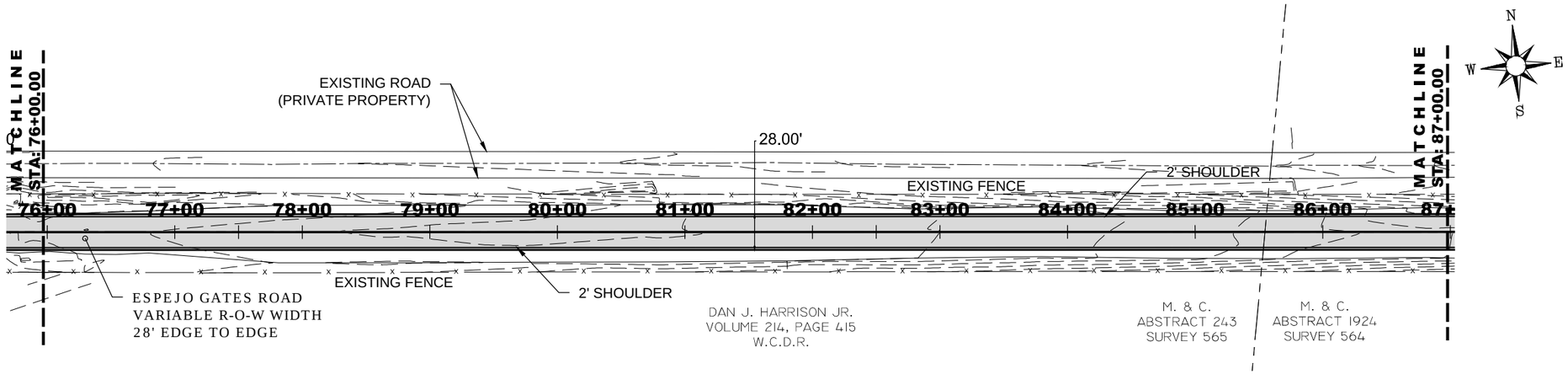

ESPEJO GATES PLAN STA: 76+00 TO 87+00

SCALE: 1" = 100'

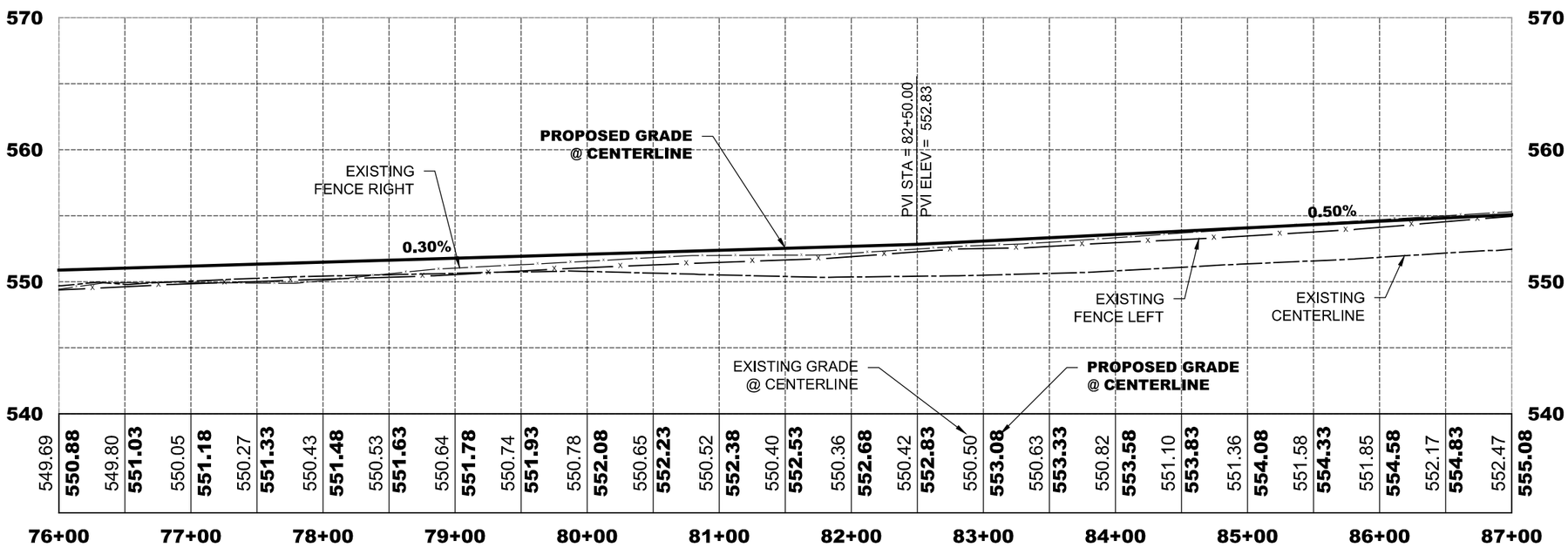

ESPEJO GATES PROFILE STA: 76+00.00 TO 87+00.00

HORIZONTAL SCALE: 1" = 100'

VERTICAL SCALE: 1" = 10'

CALL BEFORE YOU DIG!
TEXAS ONE CALL PARTICIPANTS REQUEST
48 HOURS NOTICE BEFORE YOU DIG
DRILL, OR BLAST - STOP, CALL!
TEXAS ONE CALL SYSTEM
811
Know what's below. Call before you dig.

UTILITY DEPARTMENTS
LAREDO, TEXAS

ELECTRIC COMPANY
A. E. P.
(956) 721-3169

ELECTRIC COMPANY
MEDINA ELECTRIC
(361) 747-5444

TELEPHONE COMPANY
AT&T
(956) 727-6749

CABLE COMPANY
TIME WARNER CABLE
(956) 721-0600

LEGEND

PROPOSED ASPHALT PAVEMENT
PROPOSED CONCRETE
EXISTING UNPAVED ROAD
EXISTING CONCRETE
OH — EXISTING OVERHEAD POWER LINE
X — EXISTING FENCE
GAS — EXISTING GAS LINE
EXISTING BOUNDARY LINE
400' — EXISTING CONTOUR LINE
PP — EXISTING POWER POLE
EXISTING TELEPHONE PED
EXISTING SIGN

NO.	DATE	REVISION DESCRIPTION
1	---	---
2	---	---

PLOTTED 6-6-2016

STATUS FINAL

STATE OF TEXAS
FRANCISCO RAMOS
108833
LICENSED
PROFESSIONAL ENGINEER

DRAWN BY O.C. CHECKED BY J.A.M.

6/6/2016

S&B
S&B INFRASTRUCTURE, LTD.
2120 BLAINE ST. LAREDO, TEXAS 78043
TELEPHONE: (956) 568-2561 FAX: (956) 994-0027
ENGINEERING # F-1582 SURVEYING # 10193914

ESPEJO GATES
WEBB COUNTY, TEXAS

ESPEJO GATES
STA: 76+00 TO 87+00
PLAN & PROFILE

REFERENCE FILE NAME
-
DRAWING FILE NAME
U2338-Plan&Profile.SHT 5-8

L:\PROJECTS\WEBB COUNTY\U2338\Webb County TXDOT CERTEZ\dwg\SHEETS\11-17-2015-FINAL ORDER\4- PLAN AND PROFILE\Alignment Sheets\U2338-Plan&Profile.SHT 5-8.dwg

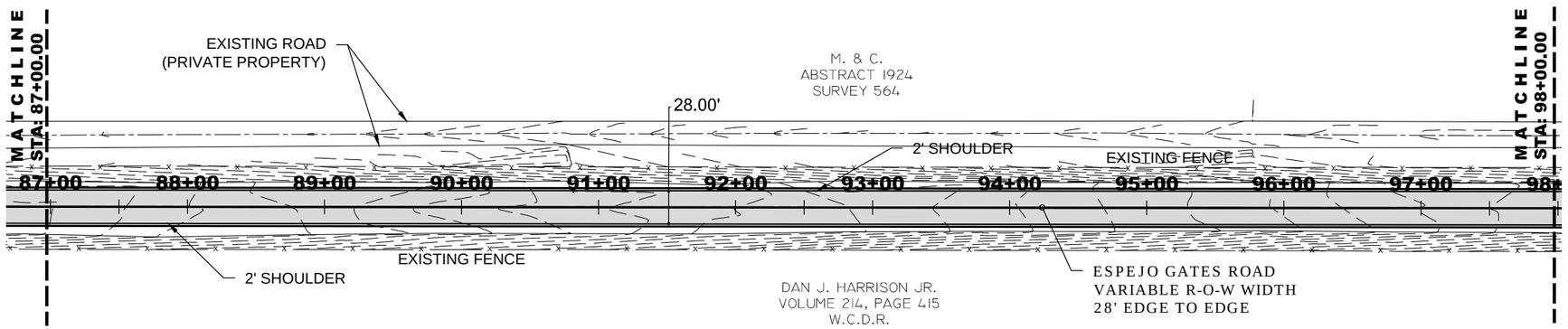

ESPEJO GATES PLAN STA: 87+00.00 TO 98+00

SCALE: 1" = 100'

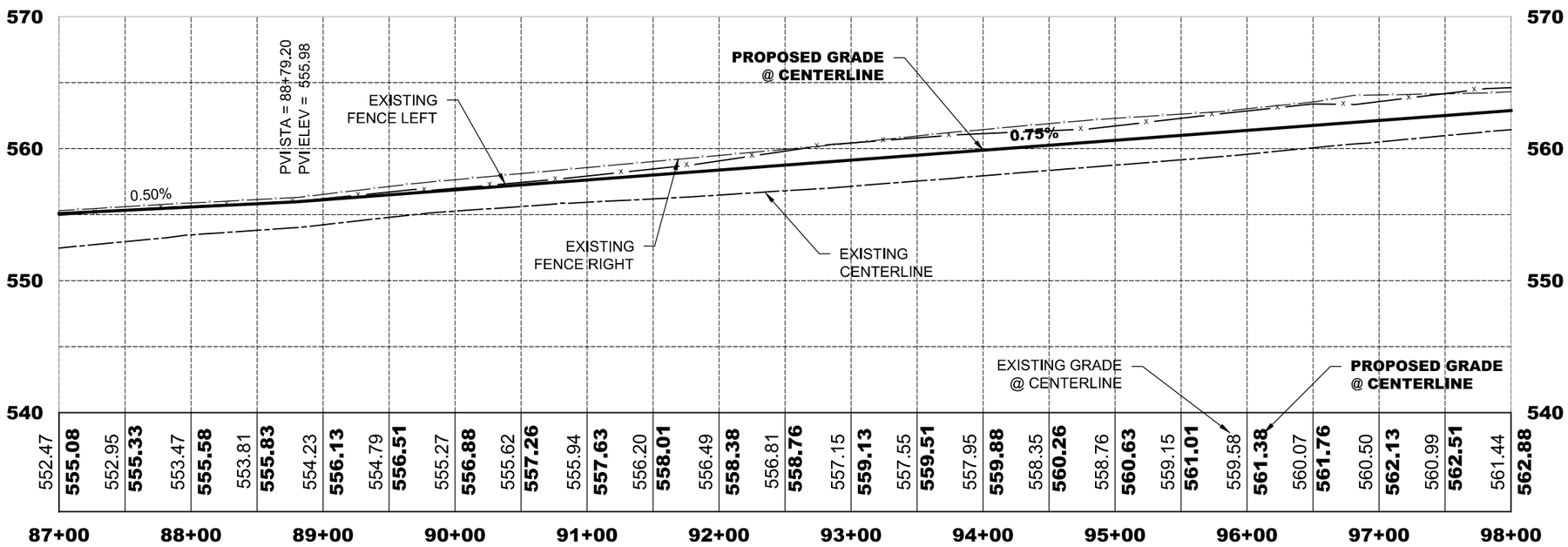

ESPEJO GATES PROFILE STA: 87+00 TO 98+00

HORIZONTAL SCALE: 1" = 100'
VERTICAL SCALE: 1" = 10'

CALL BEFORE YOU DIG!
TEXAS ONE CALL PARTICIPANTS REQUEST 48 HOURS NOTICE BEFORE YOU DIG DRILL, OR BLAST - STOP, CALL!
TEXAS ONE CALL SYSTEM
811
Know what's below. Call before you dig.

UTILITY DEPARTMENTS
LAREDO, TEXAS

ELECTRIC COMPANY
A. E. P.
(956) 721-3169

ELECTRIC COMPANY
MEDINA ELECTRIC
(361) 747-5444

TELEPHONE COMPANY
AT&T
(956) 727-6749

CABLE COMPANY
TIME WARNER CABLE
(956) 721-0600

LEGEND

- PROPOSED ASPHALT PAVEMENT
- PROPOSED CONCRETE
- EXISTING UNPAVED ROAD
- EXISTING CONCRETE
- OH — EXISTING OVERHEAD POWER LINE
- X — EXISTING FENCE
- GAS — EXISTING GAS LINE
- EXISTING BOUNDARY LINE
- 400' — EXISTING CONTOUR LINE
- PP — EXISTING POWER POLE
- EXISTING TELEPHONE PED
- EXISTING SIGN

NO.	DATE	REVISION DESCRIPTION
1	---	---
2	---	---

PLOTTED 6-6-2016
STATUS FINAL

STATE OF TEXAS
FRANCISCO RAMOS
108833
LICENSED PROFESSIONAL ENGINEER

DRAWN BY O.C. CHECKED BY J.A.M.

6/6/2016

S&B INFRASTRUCTURE, LTD.
2120 BLAINE ST. LAREDO, TEXAS 78043
TELEPHONE: (956) 568-2561 FAX: (956) 994-0227
ENGINEERING # F-1582 SURVEYING # 10193914

ESPEJO GATES
WEBB COUNTY, TEXAS

ESPEJO GATES
STA: 87+00 TO 98+00
PLAN & PROFILE

REFERENCE FILE NAME -
DRAWING FILE NAME U2338-Plan&Profile.SHT 5-8

L:\PROJECTS\WEBB COUNTY\U2338\Webb County TXDOT CERTEZ\dwg\SHEETS\11-17-2015-FINAL ORDER\4- PLAN AND PROFILE\Alignment Sheets\U2338-Plan&Profile.SHT 5-8.dwg

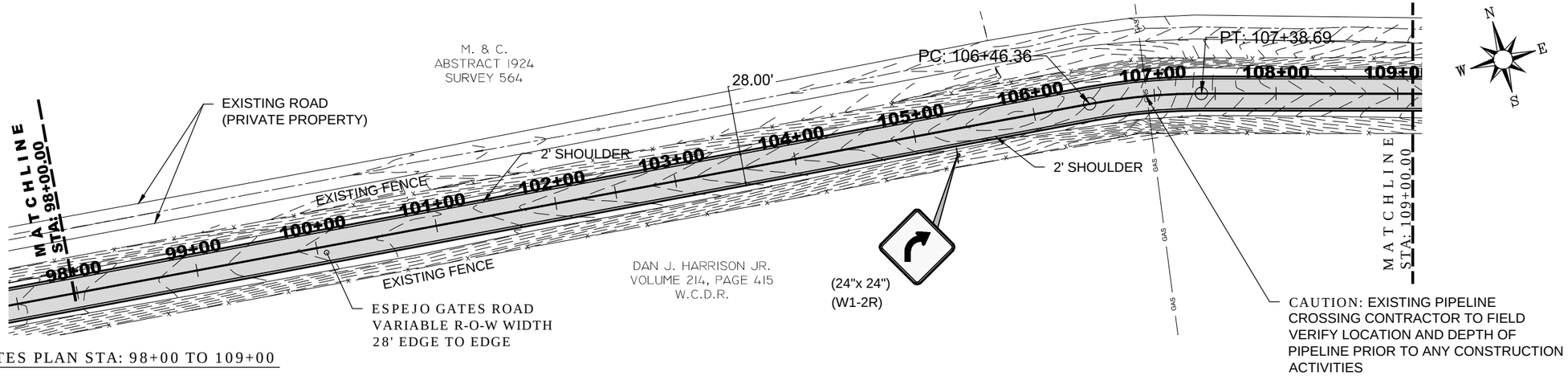

ESPEJO GATES PLAN STA: 98+00 TO 109+00

SCALE: 1" = 100'

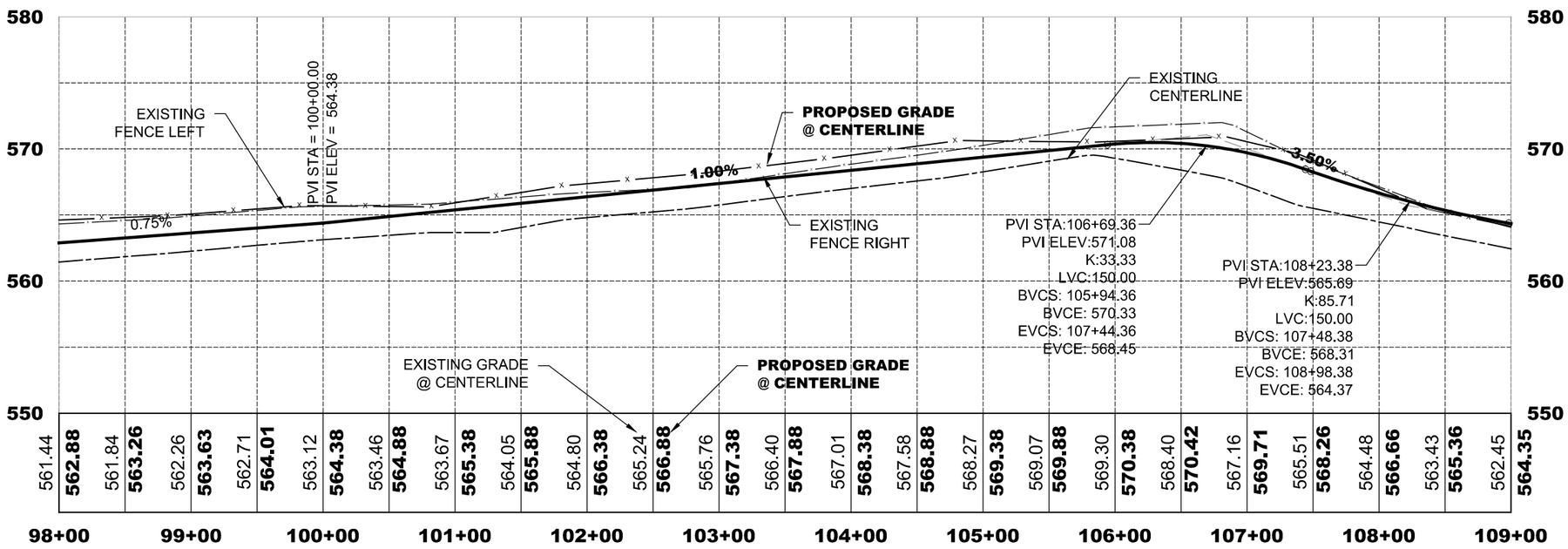

ESPEJO GATES PROFILE STA: 98+00 TO 109+00

HORIZONTAL SCALE: 1" = 100'

VERTICAL SCALE: 1" = 10'

SUPER ELEVATION TRANSITION MAX e = 6%										
CURVE ID	PI STA	RADIUS FT	DESIGN SPEED MPH	e%	RUNOUT	RUNOFF	PC STA. OF CURVE	PT STA. OF CURVE	RUNOFF	RUNOUT
ESP C11	106+92.66	500	30	4.8%	105+23.06	105+59.36	106+46.36	107+38.69	108+25.69	108+61.99

NOTES:

1. W1-2L (CURVE SIGNS) HAVE A DISTANCE OF 180' BEFORE TURN BEGINS
2. W1-8 HAVE 80' BETWEEN EACH

CALL BEFORE YOU DIG!
TEXAS ONE CALL PARTICIPANTS REQUEST
48 HOURS NOTICE BEFORE YOU DIG
DRILL, OR BLAST - STOP, CALL!
TEXAS ONE CALL SYSTEM
811
Know what's below. Call before you dig.

UTILITY DEPARTMENTS
LAREDO, TEXAS

WATER DISTRIBUTION AND SANITARY SEWER
ROLANDO LOZANO
LAREDO WATER UTILITIES DEPARTMENT
(956) 794-1625

ELECTRIC COMPANY
A. E. P.
(956) 721-3169

TELEPHONE COMPANY
ATT
(956) 727-6749

CABLE COMPANY
TIME WARNER CABLE
(956) 721-0600

LEGEND

PROPOSED ASPHALT PAVEMENT
PROPOSED CONCRETE
EXISTING UNPAVED ROAD
EXISTING CONCRETE
OH — EXISTING OVERHEAD POWER LINE
X — EXISTING FENCE
GAS — EXISTING GAS LINE
EXISTING BOUNDARY LINE
400' — EXISTING CONTOUR LINE
PP — EXISTING POWER POLE
EXISTING TELEPHONE PED
EXISTING SIGN

NO.	DATE	DESCRIPTION
1	---	---
2	---	---

PLOTTED 6-6-2016

STATUS FINAL

STATE OF TEXAS
FRANCISCO RAMOS
108833
LICENSED PROFESSIONAL ENGINEER

DRAWN BY O.C. CHECKED BY J.A.M.

6/6/2016

S&B
S&B INFRASTRUCTURE, LTD.
2120 BLAINE ST. LAREDO, TEXAS 78043
TELEPHONE: (956) 568-2561 FAX: (956) 994-0027
ENGINEERING # F-1582 SURVEYING # 10193914

ESPEJO GATES
WEBB COUNTY, TEXAS

ESPEJO GATES
STA: 98+00 TO 109+00
PLAN & PROFILE

REFERENCE FILE NAME -

DRAWING FILE NAME U2338-Plan&Profile.SHT 9-12

L:\PROJECTS\WEBB COUNTY\U2338Webb County TXDOT CERTEZ\dwg\SHEETS\11-17-2015-FINAL ORDER\4- PLAN AND PROFILE\Alignment Sheets\U2338-Plan&Profile.SHT 9-12.dwg

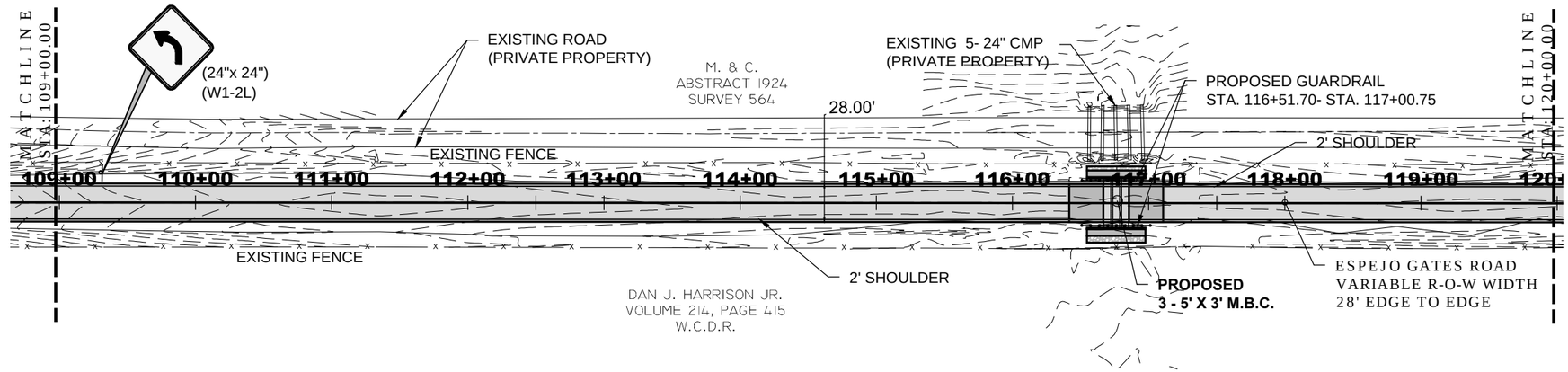

ESPEJO GATES PLAN STA: 109+00 TO 120+00

SCALE: 1" = 100'

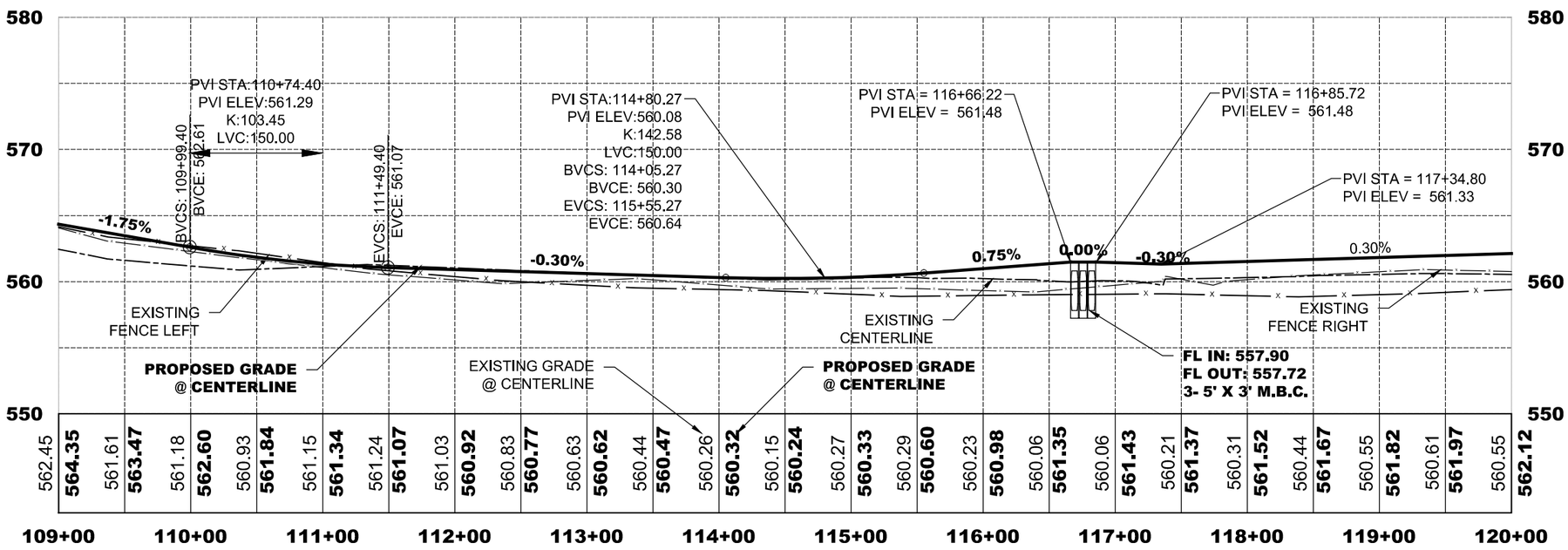

ESPEJO GATES PROFILE STA: 109+00 TO 120+00

HORIZONTAL SCALE: 1" = 100'
VERTICAL SCALE: 1" = 10'

NOTES:

1. W1-2 (CURVE SIGNS) HAVE A DISTANCE OF 180' BEFORE TURN BEGINS
2. W1-8 HAVE 80' BETWEEN EACH
3. USE PW-1 FOR HEAD WALL

CALL BEFORE YOU DIG!
TEXAS ONE CALL PARTICIPANTS REQUEST 48 HOURS NOTICE BEFORE YOU DIG DRILL, OR BLAST - STOP, CALL!
TEXAS ONE CALL SYSTEM
811
Know what's below. Call before you dig.

UTILITY DEPARTMENTS
LAREDO, TEXAS

ELECTRIC COMPANY
A. E. P.
(956) 721-3169

ELECTRIC COMPANY
MEDINA ELECTRIC
(361) 747-5444

TELEPHONE COMPANY
AT&T
(956) 727-6749

CABLE COMPANY
TIME WARNER CABLE
(956) 721-0600

LEGEND

PROPOSED ASPHALT PAVEMENT
PROPOSED CONCRETE
EXISTING UNPAVED ROAD
EXISTING CONCRETE
OH — EXISTING OVERHEAD POWER LINE
X — EXISTING FENCE
GAS — EXISTING GAS LINE
EXISTING BOUNDARY LINE
400' EXISTING CONTOUR LINE
PP EXISTING POWER POLE
EXISTING TELEPHONE PED
EXISTING SIGN

NO.	DATE	DESCRIPTION
1	---	---
2	---	---

PLOTTED 6-6-2016
STATUS FINAL

STATE OF TEXAS
FRANCISCO RAMOS
108833
LICENSED PROFESSIONAL ENGINEER

DRAWN BY O.C. CHECKED BY J.A.M.

6/6/2016

S&B INFRASTRUCTURE, LTD.
2120 BLAINE ST. LAREDO, TEXAS 78043
TELEPHONE: (956) 568-2561 FAX: (956) 994-0027
ENGINEERING # F-1582 SURVEYING # 10193914

ESPEJO GATES
WEBB COUNTY, TEXAS

ESPEJO GATES
STA: 109+00 TO 120+00
PLAN & PROFILE

REFERENCE FILE NAME
DRAWING FILE NAME
U2338-Plan&Profile.SHT 9-12

L:\PROJECTS\WEBB COUNTY\U2338\Webb County TXDOT CERTEZ\dwg\SHEETS\11-17-2015-FINAL ORDER\4- PLAN AND PROFILE\Alignment Sheets\U2338-Plan&Profile.SHT 9-12.dwg

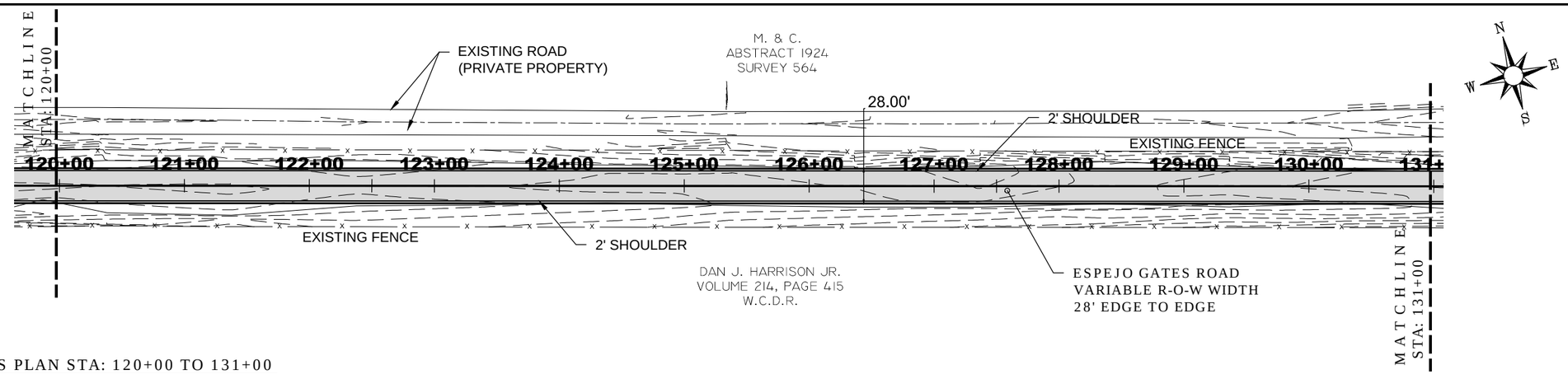

ESPEJO GATES PLAN STA: 120+00 TO 131+00

SCALE: 1" = 100'

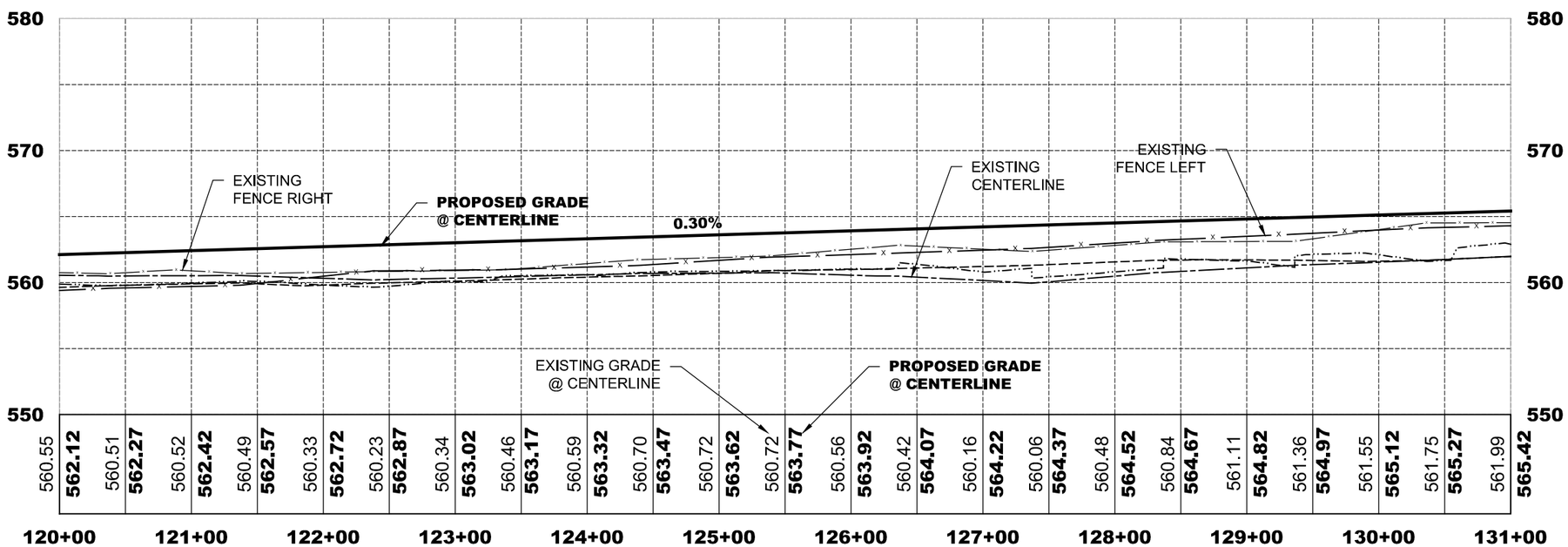

ESPEJO GATES PROFILE STA: 120+00 TO 131+00

HORIZONTAL SCALE: 1" = 100'

VERTICAL SCALE: 1" = 10'

CALL BEFORE YOU DIG!
TEXAS ONE CALL PARTICIPANTS REQUEST
48 HOURS NOTICE BEFORE YOU DIG
DRILL, OR BLAST - STOP, CALL!
TEXAS ONE CALL SYSTEM
811

UTILITY DEPARTMENTS
LAREDO, TEXAS

ELECTRIC COMPANY
A. E. P.
(956) 721-3169

ELECTRIC COMPANY
MEDINA ELECTRIC
(361) 747-5444

TELEPHONE COMPANY
AT&T
(956) 727-6749

CABLE COMPANY
TIME WARNER CABLE
(956) 721-0600

LEGEND

PROPOSED ASPHALT PAVEMENT
PROPOSED CONCRETE
EXISTING UNPAVED ROAD
EXISTING CONCRETE
OH — EXISTING OVERHEAD POWER LINE
X — EXISTING FENCE
GAS — EXISTING GAS LINE
EXISTING BOUNDARY LINE
400' EXISTING CONTOUR LINE
PP EXISTING POWER POLE
EXISTING TELEPHONE PED
EXISTING SIGN

NO.	DATE	DESCRIPTION
1	---	---
2	---	---

PLOTTED 6-6-2016

STATUS FINAL

STATE OF TEXAS
FRANCISCO RAMOS
108833
LICENSED
PROFESSIONAL ENGINEER

DRAWN BY O.C. CHECKED BY J.A.M.

6/6/2016

S&B INFRASTRUCTURE, LTD.
2120 BLAINE ST. LAREDO, TEXAS 78043
TELEPHONE: (956) 568-2561 FAX: (956) 994-0027
ENGINEERING # F-1582 SURVEYING # 10193914

ESPEJO GATES
WEBB COUNTY, TEXAS

ESPEJO GATES
STA: 120+00 TO 131+00
PLAN & PROFILE

REFERENCE FILE NAME -

DRAWING FILE NAME U2338-Plan&Profile.SHT 9-12

L:\PROJECTS\WEBB COUNTY\U2338\Webb County TXDOT CERTEZ\dwg\SHEETS\11-17-2015-FINAL ORDER\4- PLAN AND PROFILE\Alignment Sheets\U2338-Plan&Profile.SHT 9-12.dwg

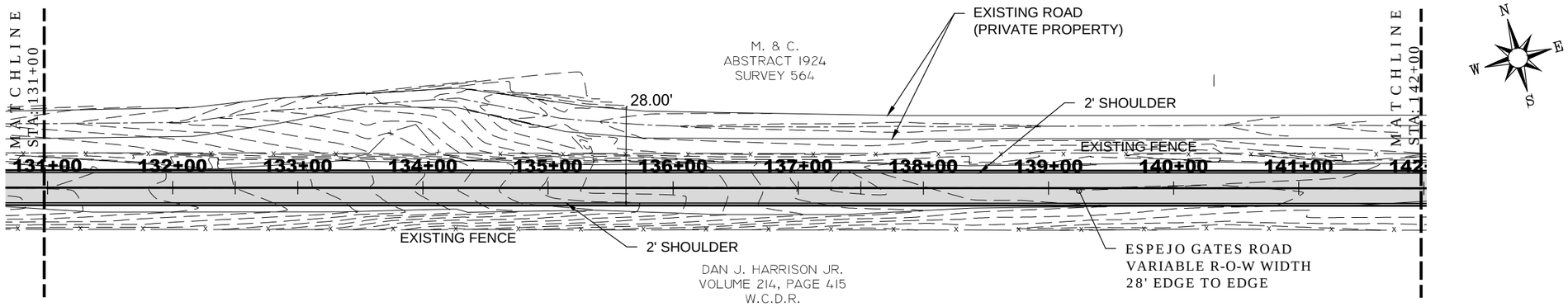

ESPEJO GATES PLAN STA: 131+00 TO 142+00

SCALE: 1" = 100'

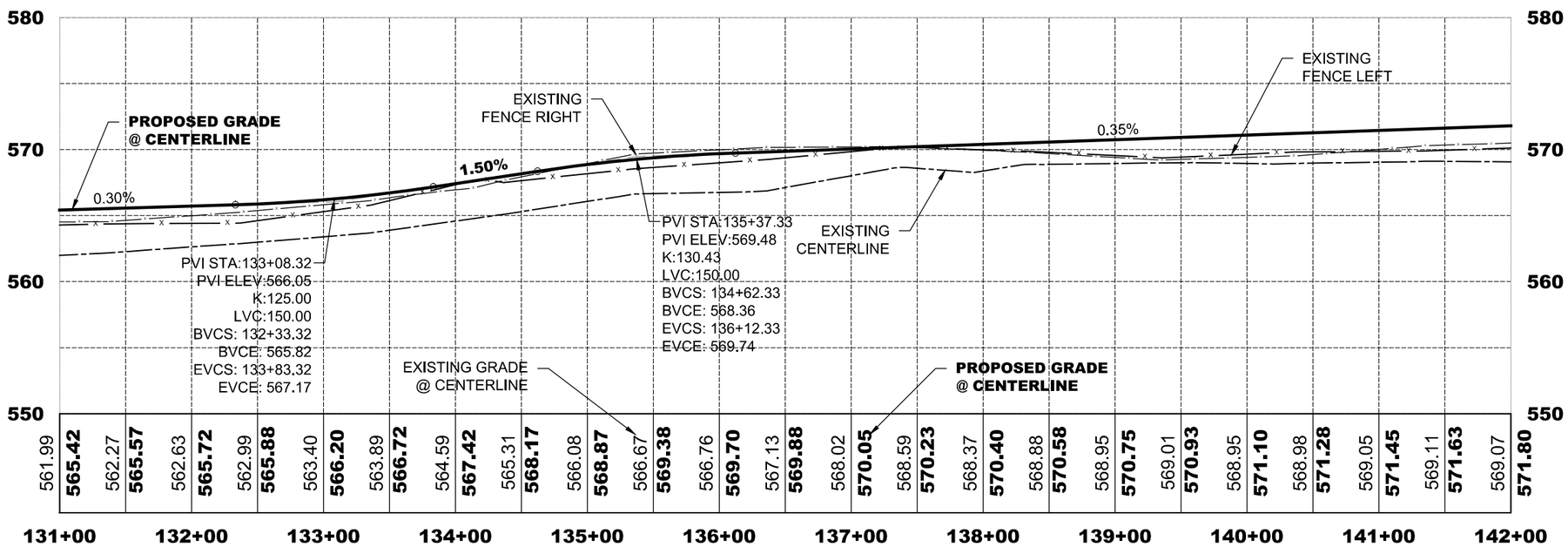

ESPEJO GATES PROFILE STA: 131+00 TO 142+00

HORIZONTAL SCALE: 1" = 100'

VERTICAL SCALE: 1" = 10'

CALL BEFORE YOU DIG!
TEXAS ONE CALL PARTICIPANTS REQUEST
48 HOURS NOTICE BEFORE YOU DIG
DRILL, OR BLAST - STOP, CALL!
TEXAS ONE CALL SYSTEM
811
Know what's below. Call before you dig.

UTILITY DEPARTMENTS
LAREDO, TEXAS

ELECTRIC COMPANY
A. E. P.
(956) 721-3169

ELECTRIC COMPANY
MEDINA ELECTRIC
(361) 747-5444

TELEPHONE COMPANY
AT&T
(956) 727-6749

CABLE COMPANY
TIME WARNER CABLE
(956) 721-0600

LEGEND

PROPOSED ASPHALT PAVEMENT
PROPOSED CONCRETE
EXISTING UNPAVED ROAD
EXISTING CONCRETE
OH — EXISTING OVERHEAD POWER LINE
X — EXISTING FENCE
GAS — EXISTING GAS LINE
EXISTING BOUNDARY LINE
400' — EXISTING CONTOUR LINE
PP — EXISTING POWER POLE
EXISTING TELEPHONE PED
EXISTING SIGN

NO.	DATE	DESCRIPTION
1	---	---
2	---	---

PLOTTED 6-6-2016

STATUS FINAL

STATE OF TEXAS
FRANCISCO RAMOS
108833
LICENSED
PROFESSIONAL ENGINEER

DRAWN BY O.C. CHECKED BY J.A.M.

6/6/2016

S&B
S&B INFRASTRUCTURE, LTD.
2120 BLAINE ST. LAREDO, TEXAS 78043
TELEPHONE: (956) 568-2561 FAX: (956) 994-0027
ENGINEERING # F-1582 SURVEYING # 10193914

ESPEJO GATES
WEBB COUNTY, TEXAS

ESPEJO GATES
STA: 131+00 TO 142+00
PLAN & PROFILE

REFERENCE FILE NAME -

DRAWING FILE NAME U2338-Plan&Profile.SHT 9-12

L:\PROJECTS\WEBB COUNTY\U2338\Webb County TXDOT CERTEZ\dwg\SHEETS\11-17-2015-FINAL ORDER\4- PLAN AND PROFILE\Alignment Sheets\U2338-Plan&Profile.SHT 9-12.dwg

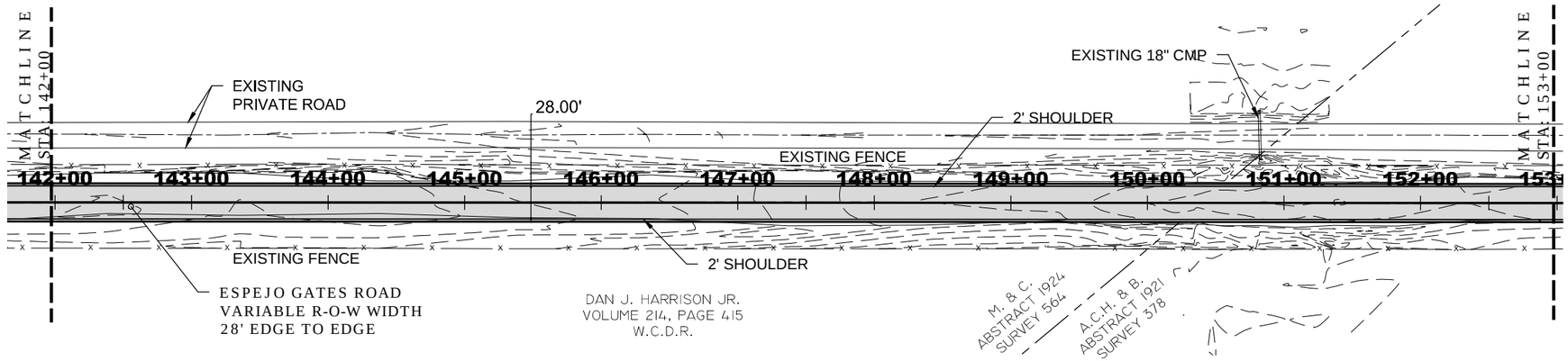

ESPEJO GATES PLAN STA: 142+00 TO 153+00

SCALE: 1" = 100'

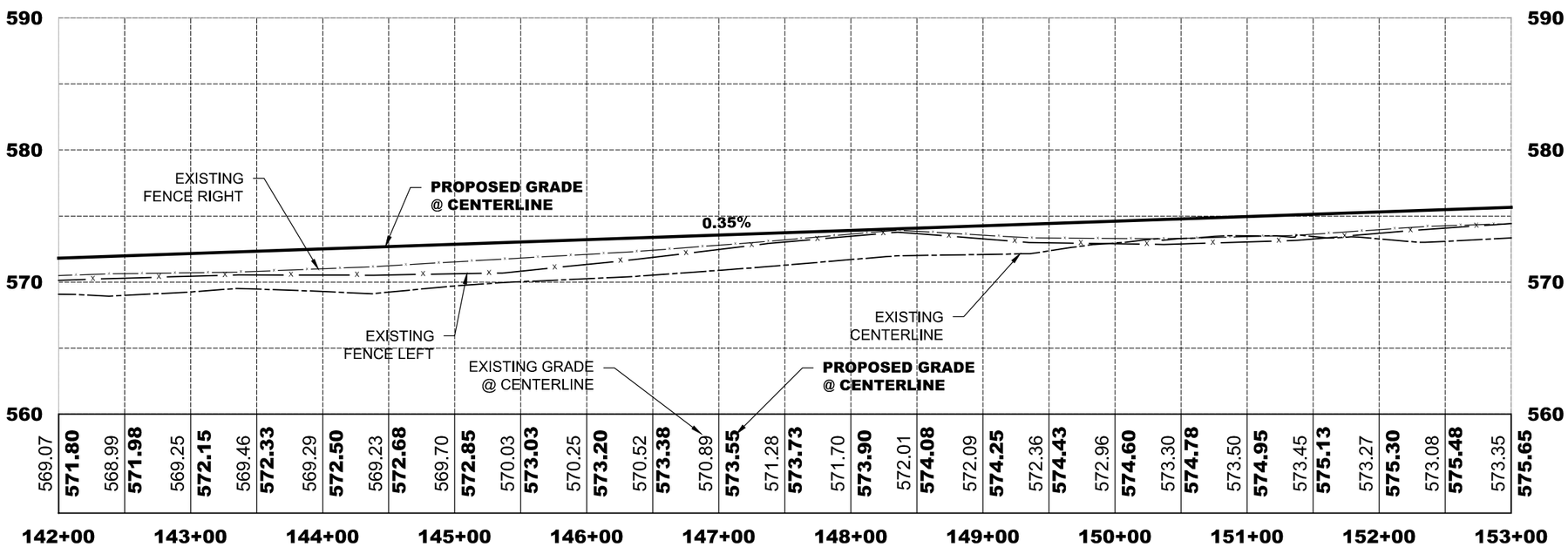

ESPEJO GATES PROFILE STA: 142+00 TO 153+00

HORIZONTAL SCALE: 1" = 100'
VERTICAL SCALE: 1" = 10'

CALL BEFORE YOU DIG!
TEXAS ONE CALL PARTICIPANTS REQUEST
48 HOURS NOTICE BEFORE YOU DIG
DRILL, OR BLAST - STOP, CALL!
TEXAS ONE CALL SYSTEM
811
Know what's below. Call before you dig.

UTILITY DEPARTMENTS
LAREDO, TEXAS

WATER DISTRIBUTION AND SANITARY SEWER
ROLANDO LOZANO
LAREDO WATER UTILITIES DEPARTMENT
(956) 794-1625

ELECTRIC COMPANY
A. E. P.
(956) 721-3169

TELEPHONE COMPANY
ATT
(956) 727-6749

CABLE COMPANY
TIME WARNER CABLE
(956) 721-0600

LEGEND

- PROPOSED ASPHALT PAVEMENT
- PROPOSED CONCRETE
- EXISTING UNPAVED ROAD
- EXISTING CONCRETE
- OH — EXISTING OVERHEAD POWER LINE
- X — EXISTING FENCE
- GAS — EXISTING GAS LINE
- EXISTING BOUNDARY LINE
- 400' — EXISTING CONTOUR LINE
- PP — EXISTING POWER POLE
- EXISTING TELEPHONE PED
- EXISTING SIGN

NO.	DATE	DESCRIPTION
1	---	---
2	---	---

PLOTTED 6-6-2016
STATUS FINAL

STATE OF TEXAS
FRANCISCO RAMOS
108833
LICENSED PROFESSIONAL ENGINEER

DRAWN BY O.C. CHECKED BY J.A.M.

6/6/2016

S&B INFRASTRUCTURE, LTD.
2120 BLAINE ST. LAREDO, TEXAS 78043
TELEPHONE: (956) 568-2561 FAX: (956) 994-0027
ENGINEERING # F-1582 SURVEYING # 10193914

ESPEJO GATES
WEBB COUNTY, TEXAS

ESPEJO GATES
STA: 142+00 TO 153+00
PLAN & PROFILE

REFERENCE FILE NAME -
DRAWING FILE NAME U2338-Plan&Profile.SHT 13-16

L:\PROJECTS\WEBB COUNTY\U2338\Webb County TXDOT CERTEZ\dwg\SHEETS\11-17-2015-FINAL ORDER\4- PLAN AND PROFILE\Alignment Sheets\U2338-Plan&Profile.SHT 13-16.dwg

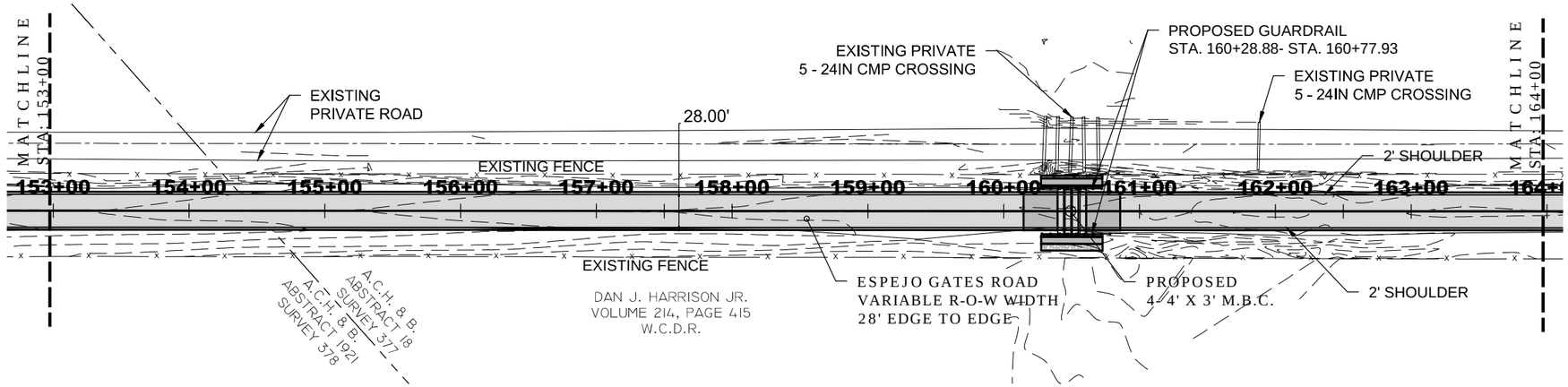

ESPEJO GATES PLAN STA: 153+00 TO 164+00

SCALE: 1" = 100'

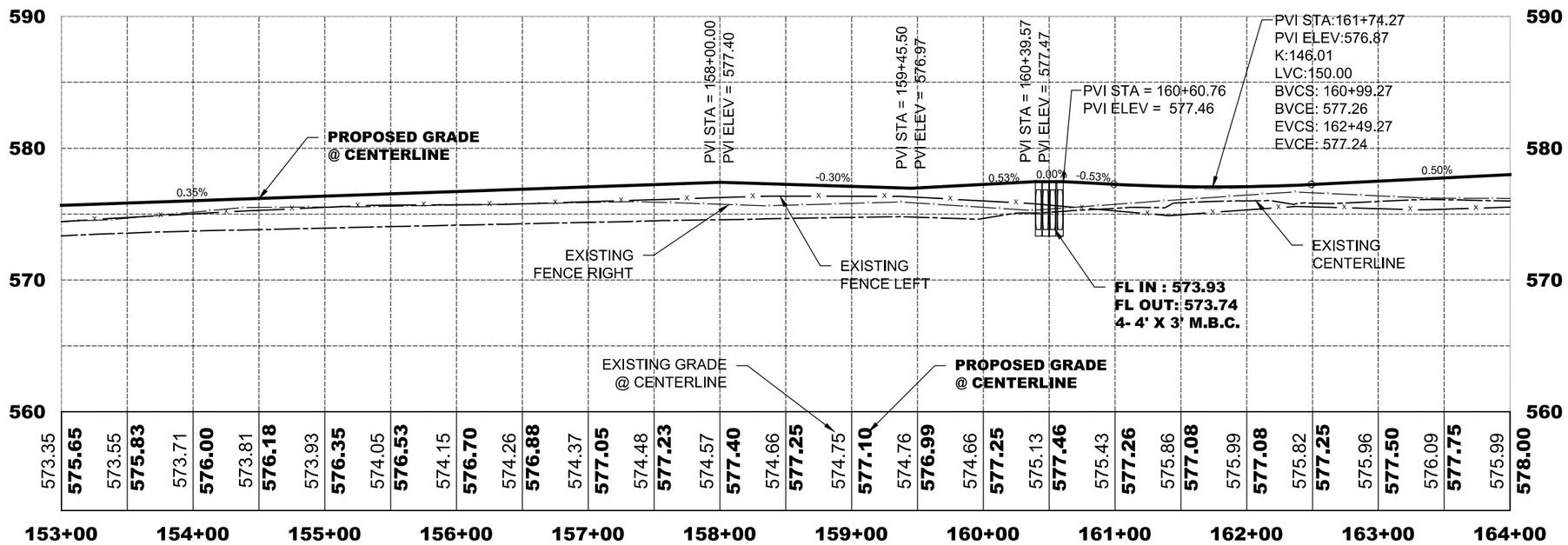

ESPEJO GATES PROFILE STA: 153+00 TO 164+00

HORIZONTAL SCALE: 1" = 100'

VERTICAL SCALE: 1" = 10'

NOTES:

1. USE PW-1 FOR HEAD WALL

CALL BEFORE YOU DIG!
TEXAS ONE CALL PARTICIPANTS REQUEST 48 HOURS NOTICE BEFORE YOU DIG DRILL, OR BLAST - STOP, CALL!
TEXAS ONE CALL SYSTEM
811
Know what's below. Call before you dig.

UTILITY DEPARTMENTS LAREDO, TEXAS

WATER DISTRIBUTION AND SANITARY SEWER
ROLANDO LOZANO
LAREDO WATER UTILITIES DEPARTMENT
(956) 794-1625

ELECTRIC COMPANY
A. E. P.
(956) 721-3169

TELEPHONE COMPANY
ATT
(956) 727-6749

CABLE COMPANY
TIME WARNER CABLE
(956) 721-0600

LEGEND

- PROPOSED ASPHALT PAVEMENT
- PROPOSED CONCRETE
- EXISTING UNPAVED ROAD
- EXISTING CONCRETE
- OH — EXISTING OVERHEAD POWER LINE
- X — EXISTING FENCE
- GAS — EXISTING GAS LINE
- EXISTING BOUNDARY LINE
- 400' — EXISTING CONTOUR LINE
- PP — EXISTING POWER POLE
- EXISTING TELEPHONE PED
- EXISTING SIGN

NO.	DATE	REVISION DESCRIPTION
1	---	---
2	---	---

PLOTTED 6-6-2016

STATUS FINAL

STATE OF TEXAS
FRANCISCO RAMOS
108833
LICENSED PROFESSIONAL ENGINEER

DRAWN BY O.C. CHECKED BY J.A.M.

6/6/2016

S&B INFRASTRUCTURE, LTD.
2120 BLAINE ST. LAREDO, TEXAS 78043
TELEPHONE: (956) 568-2561 FAX: (956) 994-0027
ENGINEERING # F-1582 SURVEYING # 10193914

ESPEJO GATES
WEBB COUNTY, TEXAS

ESPEJO GATES
STA: 153+00 TO 164+00
PLAN & PROFILE

REFERENCE FILE NAME -

DRAWING FILE NAME U2338-Plan&Profile.SHT 13-16

L:\PROJECTS\WEBB COUNTY\U2338\Webb County TXDOT CERTEZ\dwg\SHEETS\11-17-2015-FINAL ORDER\4- PLAN AND PROFILE\Alignment Sheets\U2338-Plan&Profile.SHT 13-16.dwg

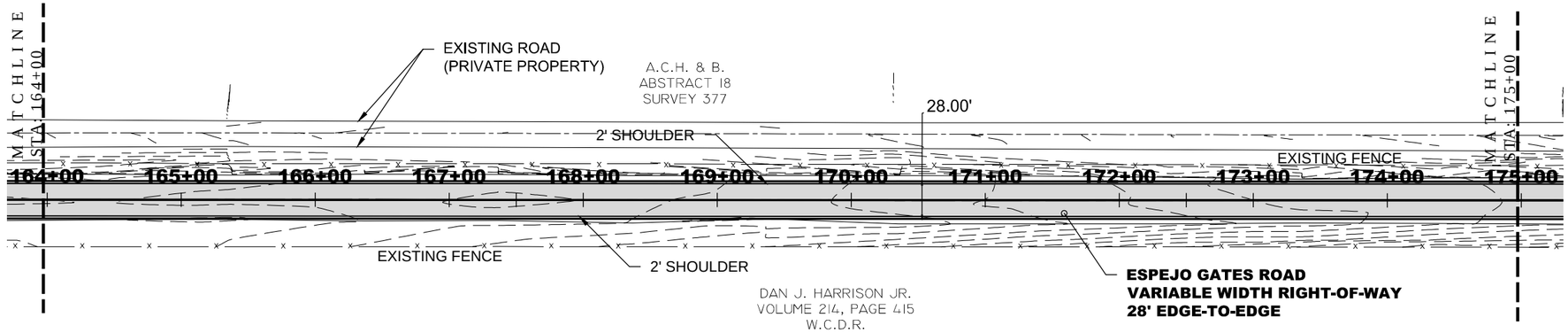

ESPEJO GATES PLAN STA: 164+00 TO 175+00

SCALE: 1" = 100'

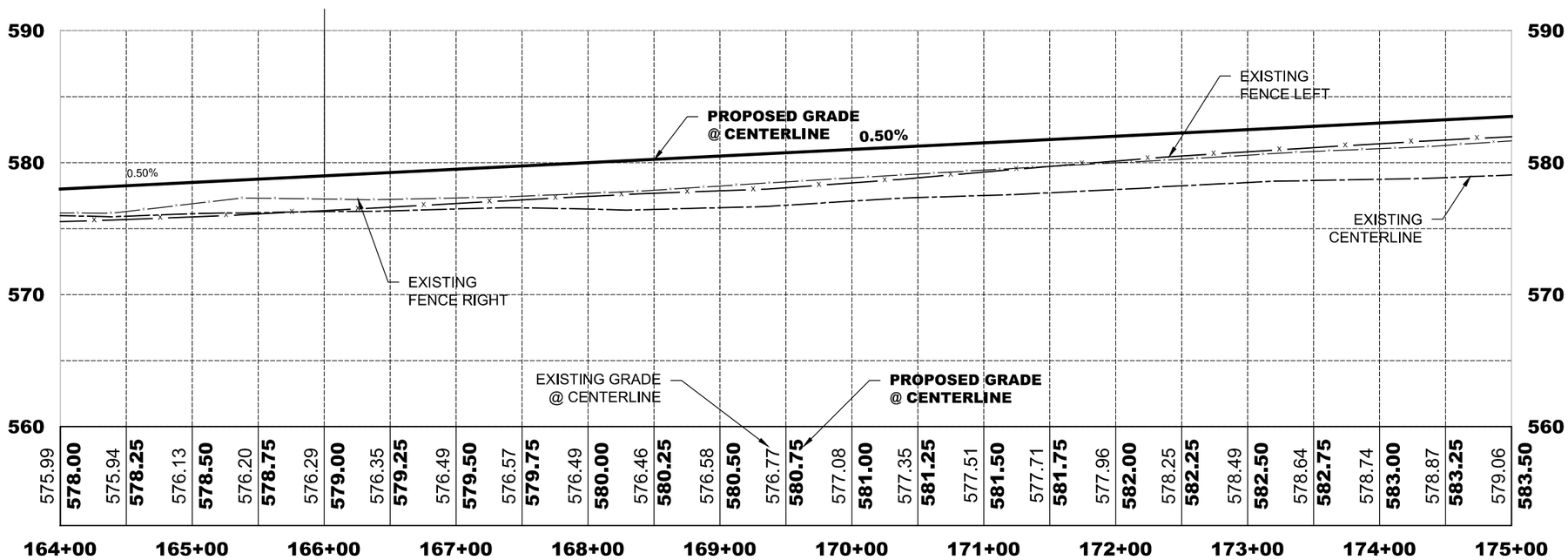

ESPEJO GATES PROFILE STA: 164+00 TO 175+00

HORIZONTAL SCALE: 1" = 100'
VERTICAL SCALE: 1" = 10'

CALL BEFORE YOU DIG!
TEXAS ONE CALL PARTICIPANTS REQUEST
48 HOURS NOTICE BEFORE YOU DIG
DRILL, OR BLAST - STOP, CALL!
TEXAS ONE CALL SYSTEM
811
Know what's below. Call before you dig.

UTILITY DEPARTMENTS
LAREDO, TEXAS

WATER DISTRIBUTION AND SANITARY SEWER
ROLANDO LOZANO
LAREDO WATER UTILITIES DEPARTMENT
(956) 794-1625

ELECTRIC COMPANY
A. E. P.
(956) 721-3169

TELEPHONE COMPANY
ATT
(956) 727-6749

CABLE COMPANY
TIME WARNER CABLE
(956) 721-0600

LEGEND

- PROPOSED ASPHALT PAVEMENT
- PROPOSED CONCRETE
- EXISTING UNPAVED ROAD
- EXISTING CONCRETE
- OH — EXISTING OVERHEAD POWER LINE
- X — EXISTING FENCE
- GAS — EXISTING GAS LINE
- EXISTING BOUNDARY LINE
- 400' — EXISTING CONTOUR LINE
- PP — EXISTING POWER POLE
- EXISTING TELEPHONE PED
- EXISTING SIGN

NO.	DATE	REVISION DESCRIPTION
1	---	---
2	---	---

PLOTTED 6-6-2016
STATUS FINAL

STATE OF TEXAS
FRANCISCO RAMOS
108833
LICENSED PROFESSIONAL ENGINEER

DRAWN BY O.C. CHECKED BY J.A.M.

6/6/2016

S&B
S&B INFRASTRUCTURE, LTD.
2120 BLAINE ST. LAREDO, TEXAS 78043
TELEPHONE: (956) 568-2561 FAX: (956) 994-0227
ENGINEERING # F-1582 SURVEYING # 10193914

ESPEJO GATES
WEBB COUNTY, TEXAS

ESPEJO GATES
STA: 164+00, TO 175+00
PLAN & PROFILE

REFERENCE FILE NAME
DRAWING FILE NAME
U2338-Plan&Profile.SHT 13-16

L:\PROJECTS\WEBB COUNTY\U2338\Webb County TXDOT CERTEZ\dwg\SHEETS\11-17-2015-FINAL ORDER\4- PLAN AND PROFILE\Alignment Sheets\U2338-Plan&Profile.SHT 13-16.dwg

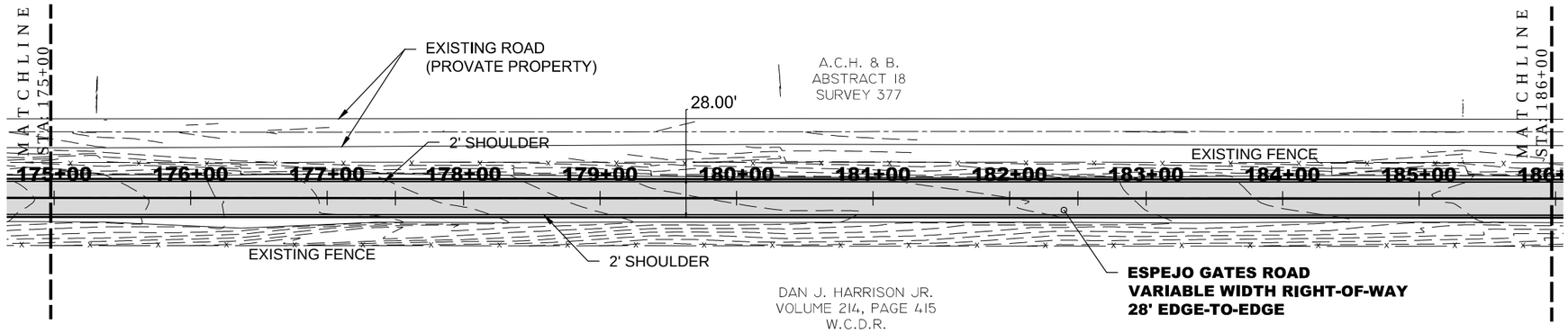

ESPEJO GATES PLAN STA: 175+00 TO 186+00

SCALE: 1" = 100'

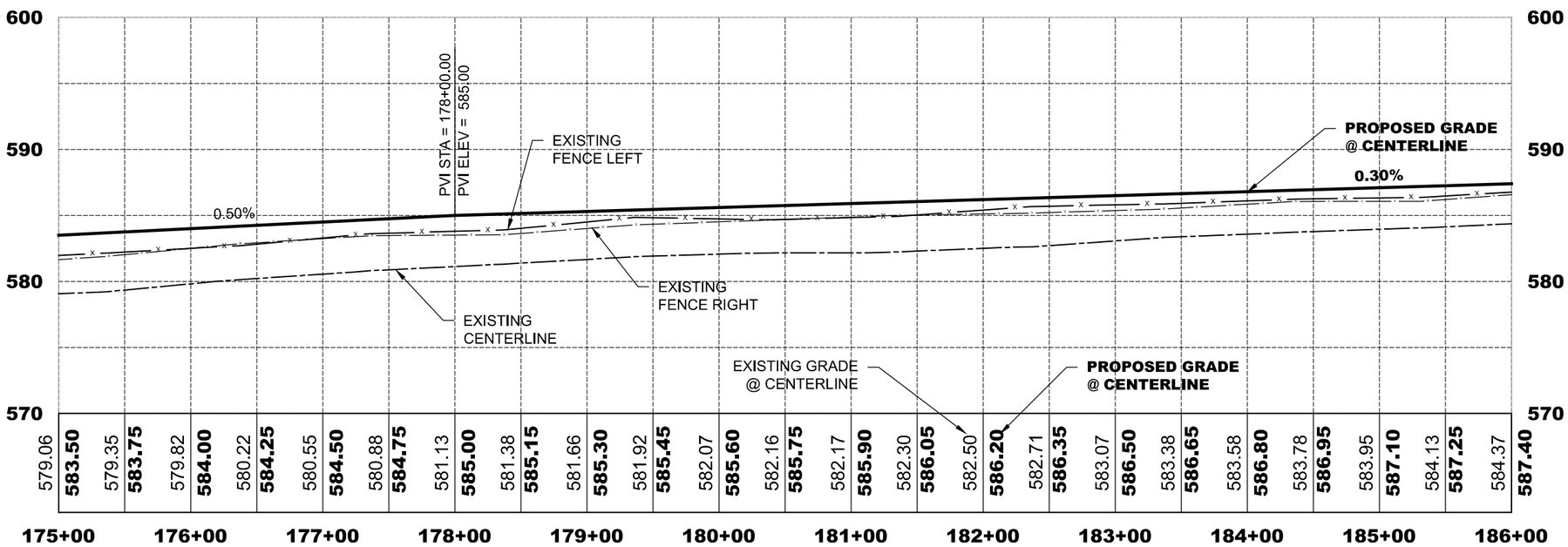

ESPEJO GATES PROFILE STA: 175+00 TO 186+00

HORIZONTAL SCALE: 1" = 100'
VERTICAL SCALE: 1" = 10'

CALL BEFORE YOU DIG!
TEXAS ONE CALL PARTICIPANTS REQUEST 48 HOURS NOTICE BEFORE YOU DIG DRILL, OR BLAST - STOP, CALL!
TEXAS ONE CALL SYSTEM
811
Know what's below. Call before you dig.

UTILITY DEPARTMENTS
LAREDO, TEXAS

ELECTRIC COMPANY
A. E. P.
(956) 721-3169

ELECTRIC COMPANY
MEDINA ELECTRIC
(361) 747-5444

TELEPHONE COMPANY
AT&T
(956) 727-6749

CABLE COMPANY
TIME WARNER CABLE
(956) 721-0600

LEGEND

PROPOSED ASPHALT PAVEMENT
PROPOSED CONCRETE
EXISTING UNPAVED ROAD
EXISTING CONCRETE
OH — EXISTING OVERHEAD POWER LINE
X — EXISTING FENCE
GAS — EXISTING GAS LINE
EXISTING BOUNDARY LINE
400' — EXISTING CONTOUR LINE
PP — EXISTING POWER POLE
EXISTING TELEPHONE PED
EXISTING SIGN

NO.	DATE	DESCRIPTION
1	---	---
2	---	---

PLOTTED 6-6-2016
STATUS FINAL

STATE OF TEXAS
FRANCISCO RAMOS
108833
LICENSED PROFESSIONAL ENGINEER

DRAWN BY O.C. CHECKED BY J.A.M.

6/6/2016

S&B
S&B INFRASTRUCTURE, LTD.
2120 BLAINE ST. LAREDO, TEXAS 78043
TELEPHONE: (956) 568-2561 FAX: (956) 994-0027
ENGINEERING # F-1582 SURVEYING # 10193914

ESPEJO GATES
WEBB COUNTY, TEXAS

ESPEJO GATES
STA: 175+00 TO 186+00
PLAN & PROFILE

REFERENCE FILE NAME
-
DRAWING FILE NAME
U2338-Plan&Profile.SHT 13-16

L:\PROJECTS\WEBB COUNTY\U2338Webb County TXDOT CERTEZ\dwg\SHEETS\11-17-2015-FINAL ORDER\4- PLAN AND PROFILE\Alignment Sheets\U2338-Plan&Profile.SHT 13-16.dwg

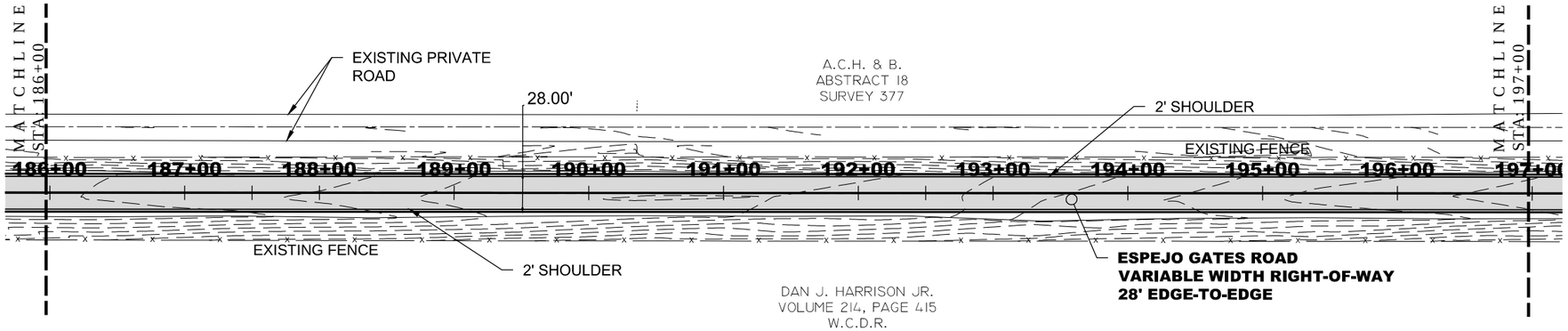

ESPEJO GATES PLAN STA: 186+00 TO 197+00

SCALE: 1" = 100'

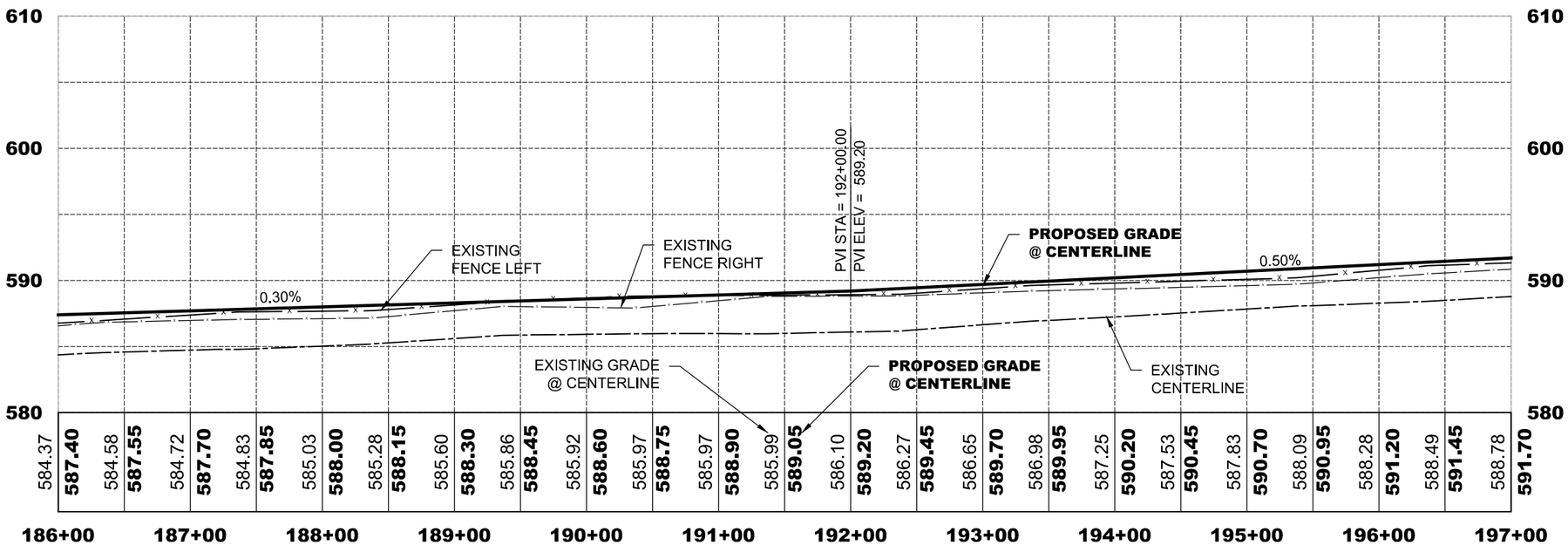

ESPEJO GATES PROFILE STA: 186+00 TO 197+00

HORIZONTAL SCALE: 1" = 100'

VERTICAL SCALE: 1" = 10'

CALL BEFORE YOU DIG!
TEXAS ONE CALL PARTICIPANTS REQUEST 48 HOURS NOTICE BEFORE YOU DIG DRILL, OR BLAST - STOP, CALL!
TEXAS ONE CALL SYSTEM
811
Know what's below. Call before you dig.

UTILITY DEPARTMENTS
LAREDO, TEXAS

ELECTRIC COMPANY
A. E. P.
(956) 721-3169

ELECTRIC COMPANY
MEDINA ELECTRIC
(361) 747-5444

TELEPHONE COMPANY
AT&T
(956) 727-6749

CABLE COMPANY
TIME WARNER CABLE
(956) 721-0600

LEGEND

PROPOSED ASPHALT PAVEMENT
PROPOSED CONCRETE
EXISTING UNPAVED ROAD
EXISTING CONCRETE
OH — EXISTING OVERHEAD POWER LINE
X — EXISTING FENCE
GAS — EXISTING GAS LINE
EXISTING BOUNDARY LINE
400' — EXISTING CONTOUR LINE
PP — EXISTING POWER POLE
EXISTING TELEPHONE PED
EXISTING SIGN

NO.	DATE	DESCRIPTION
1	---	---
2	---	---

PLOTTED 6-6-2016

STATUS FINAL

STATE OF TEXAS
FRANCISCO RAMOS
108833
LICENSED PROFESSIONAL ENGINEER

DRAWN BY O.C. CHECKED BY J.A.M.

6/6/2016

S&B INFRASTRUCTURE, LTD.
2120 BLAINE ST. LAREDO, TEXAS 78043
TELEPHONE: (956) 568-2561 FAX: (956) 994-0027
ENGINEERING # F-1582 SURVEYING # 10193914

ESPEJO GATES
WEBB COUNTY, TEXAS

ESPEJO GATES
STA: 186+00 TO 197+00
PLAN & PROFILE

REFERENCE FILE NAME -

DRAWING FILE NAME U2338-Plan&Profile.SHT 17-20

L:\PROJECTS\WEBB COUNTY\U2338\Webb County TXDOT CERTEZ\dwg\SHEETS\11-17-2015-FINAL ORDER\4- PLAN AND PROFILE\Alignment Sheets\U2338-Plan&Profile.SHT 17-20.dwg

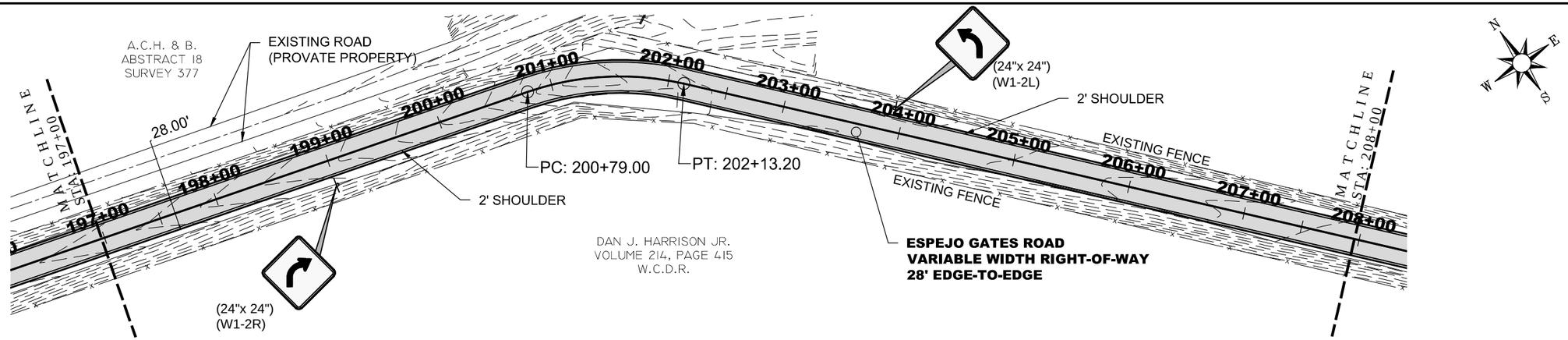

ESPEJO GATES PLAN STA: 197+00 TO 208+00

SCALE: 1" = 100'

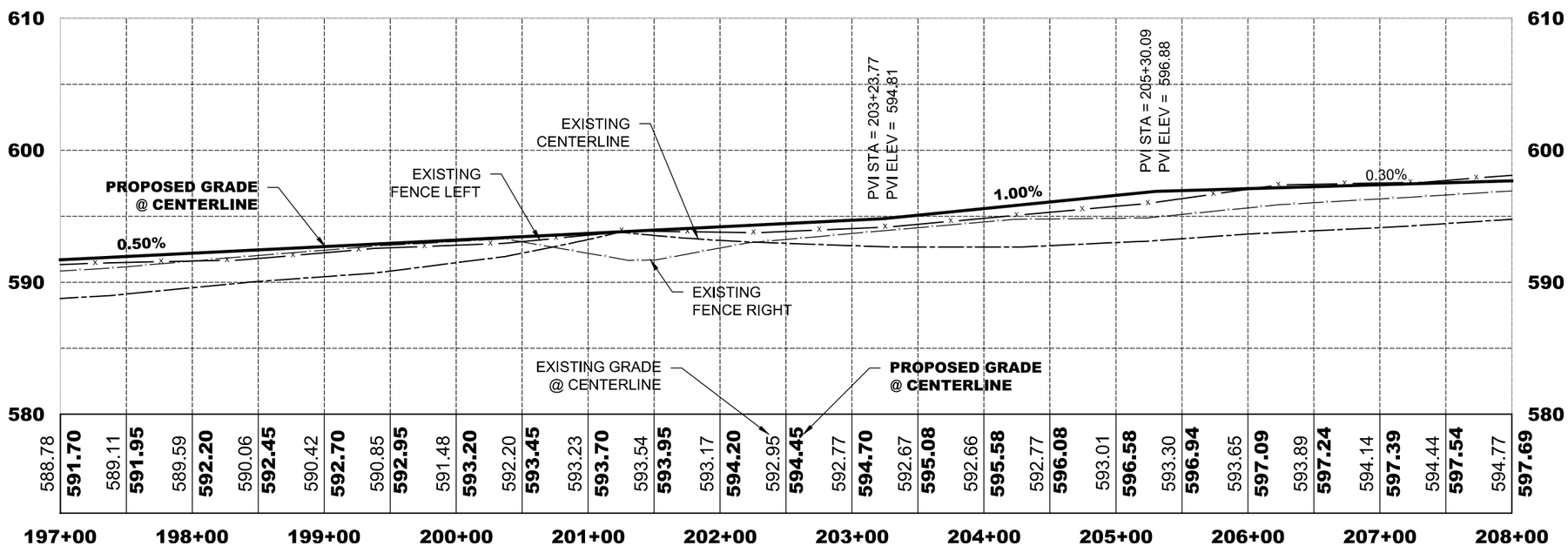

ESPEJO GATES PROFILE STA: 197+00 TO 208+00

HORIZONTAL SCALE: 1" = 100'
VERTICAL SCALE: 1" = 10'

SUPER ELEVATION TRANSITION MAX e = 6%										
CURVE ID	PI STA	RADIUS FT	DESIGN SPEED MPH	e%	RUNOUT	RUNOFF	PC STA. OF CURVE	PT STA. OF CURVE	RUNOFF	RUNOUT
ESP C12	201+47.90	240	30	6.0%	199+33.70	199+70.00	200+79.00	202+13.20	203+22.20	203+58.50

NOTES:

1. W1-2 (CURVE SIGNS) HAVE A DISTANCE OF 180' BEFORE TURN BEGINS
2. W1-8 HAVE 80' BETWEEN EACH

CALL BEFORE YOU DIG!
TEXAS ONE CALL PARTICIPANTS REQUEST 48 HOURS NOTICE BEFORE YOU DIG DRILL, OR BLAST - STOP, CALL!
TEXAS ONE CALL SYSTEM
811
Know what's below. Call before you dig.

UTILITY DEPARTMENTS
LAREDO, TEXAS

ELECTRIC COMPANY
A. E. P.
(956) 721-3169

ELECTRIC COMPANY
MEDINA ELECTRIC
(361) 747-5444

TELEPHONE COMPANY
AT&T
(956) 727-6749

CABLE COMPANY
TIME WARNER CABLE
(956) 721-0600

LEGEND

PROPOSED ASPHALT PAVEMENT
PROPOSED CONCRETE
EXISTING UNPAVED ROAD
EXISTING CONCRETE
OH — EXISTING OVERHEAD POWER LINE
X — EXISTING FENCE
GAS — EXISTING GAS LINE
EXISTING BOUNDARY LINE
400' — EXISTING CONTOUR LINE
PP — EXISTING POWER POLE
EXISTING TELEPHONE PED
EXISTING SIGN

NO.	DATE	REVISION DESCRIPTION
1	---	---
2	---	---

PLOTTED 6-6-2016
STATUS FINAL

STATE OF TEXAS
FRANCISCO RAMOS
108833
LICENSED PROFESSIONAL ENGINEER

DRAWN BY O.C. CHECKED BY J.A.M.

6/6/2016

S&B INFRASTRUCTURE, LTD.
2120 BLAINE ST. LAREDO, TEXAS 78043
TELEPHONE: (956) 568-2561 FAX: (956) 994-0027
ENGINEERING # F-1582 SURVEYING # 10193914

ESPEJO GATES
WEBB COUNTY, TEXAS

ESPEJO GATES
STA: 197+00 TO 208+00
PLAN & PROFILE

REFERENCE FILE NAME -
DRAWING FILE NAME U2338-Plan&Profile.SHT 17-20

L:\PROJECTS\WEBB COUNTY\U2338\Webb County TXDOT CERTE2\dwg\SHEETS\11-17-2015-FINAL ORDER\4- PLAN AND PROFILE\Alignment Sheets\U2338-Plan&Profile.SHT 17-20.dwg

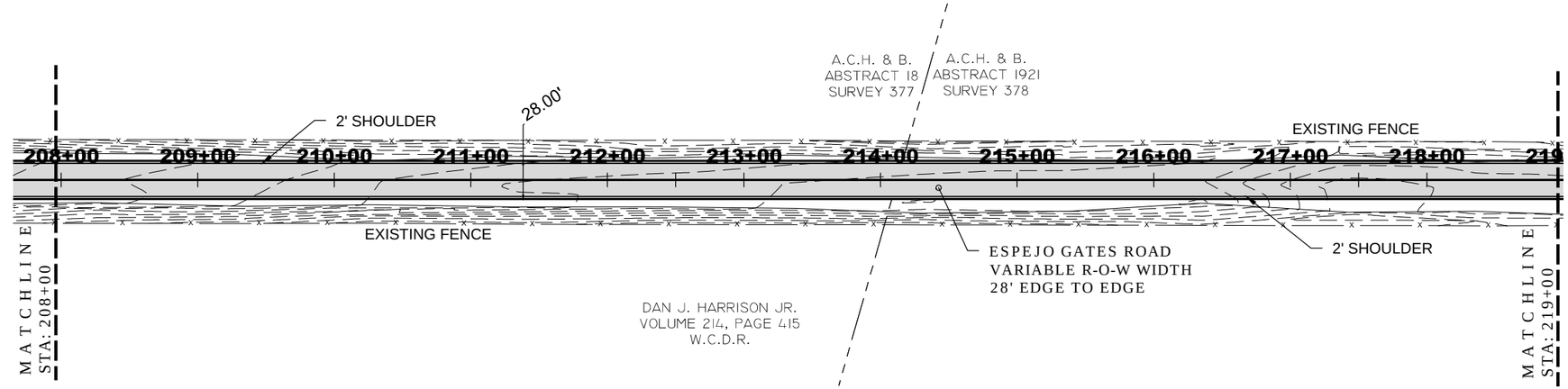

ESPEJO GATES PLAN STA: 208+00 TO 219+00

SCALE: 1" = 100'

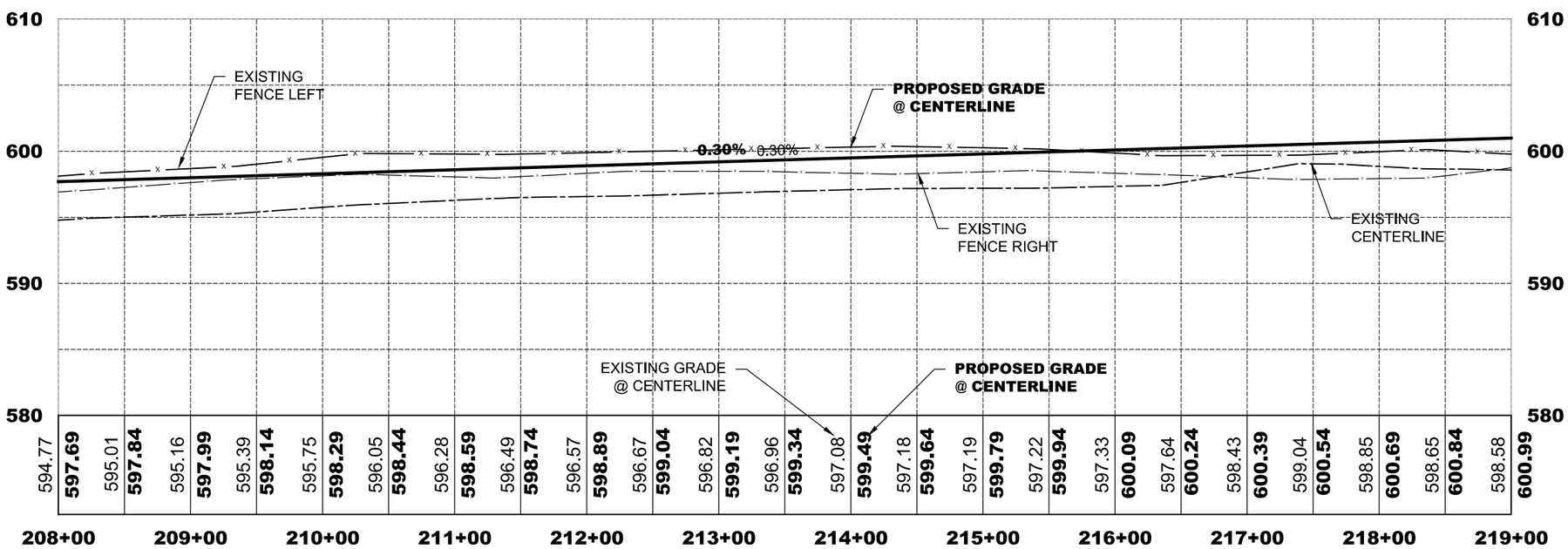

ESPEJO GATES PROFILE STA: 208+00 TO 219+00

HORIZONTAL SCALE: 1" = 100'
VERTICAL SCALE: 1" = 10'

CALL BEFORE YOU DIG!
TEXAS ONE CALL PARTICIPANTS REQUEST 48 HOURS NOTICE BEFORE YOU DIG DRILL, OR BLAST - STOP, CALL!
TEXAS ONE CALL SYSTEM
811
Know what's below. Call before you dig.

UTILITY DEPARTMENTS
LAREDO, TEXAS

ELECTRIC COMPANY
A. E. P.
(956) 721-3169

ELECTRIC COMPANY
MEDINA ELECTRIC
(361) 747-5444

TELEPHONE COMPANY
AT&T
(956) 727-6749

CABLE COMPANY
TIME WARNER CABLE
(956) 721-0600

LEGEND

PROPOSED ASPHALT PAVEMENT
PROPOSED CONCRETE
EXISTING UNPAVED ROAD
EXISTING CONCRETE
OH — EXISTING OVERHEAD POWER LINE
X — EXISTING FENCE
GAS — EXISTING GAS LINE
EXISTING BOUNDARY LINE
400' — EXISTING CONTOUR LINE
PP — EXISTING POWER POLE
EXISTING TELEPHONE PED
EXISTING SIGN

NO.	DATE	DESCRIPTION
1	---	---
2	---	---

REVISION

PLOTTED 6-6-2016

STATUS FINAL

STATE OF TEXAS
FRANCISCO RAMOS
108833
LICENSED
PROFESSIONAL ENGINEER

DRAWN BY O.C. CHECKED BY J.A.M.

6/6/2016

S&B INFRASTRUCTURE, LTD.
2120 BLAINE ST. LAREDO, TEXAS 78043
TELEPHONE: (956) 568-2561 FAX: (956) 994-0027
ENGINEERING # F-1582 SURVEYING # 10193914

ESPEJO GATES
WEBB COUNTY, TEXAS

ESPEJO GATES
STA: 208+00 TO 219+00
PLAN & PROFILE

REFERENCE FILE NAME -
DRAWING FILE NAME U2338-Plan&Profile.SHT 17-20

L:\PROJECTS\WEBB COUNTY\U2338\Webb County TXDOT CERTEZ\dwg\SHEETS\11-17-2015-FINAL ORDER\4- PLAN AND PROFILE\Alignment Sheets\U2338-Plan&Profile.SHT 17-20.dwg

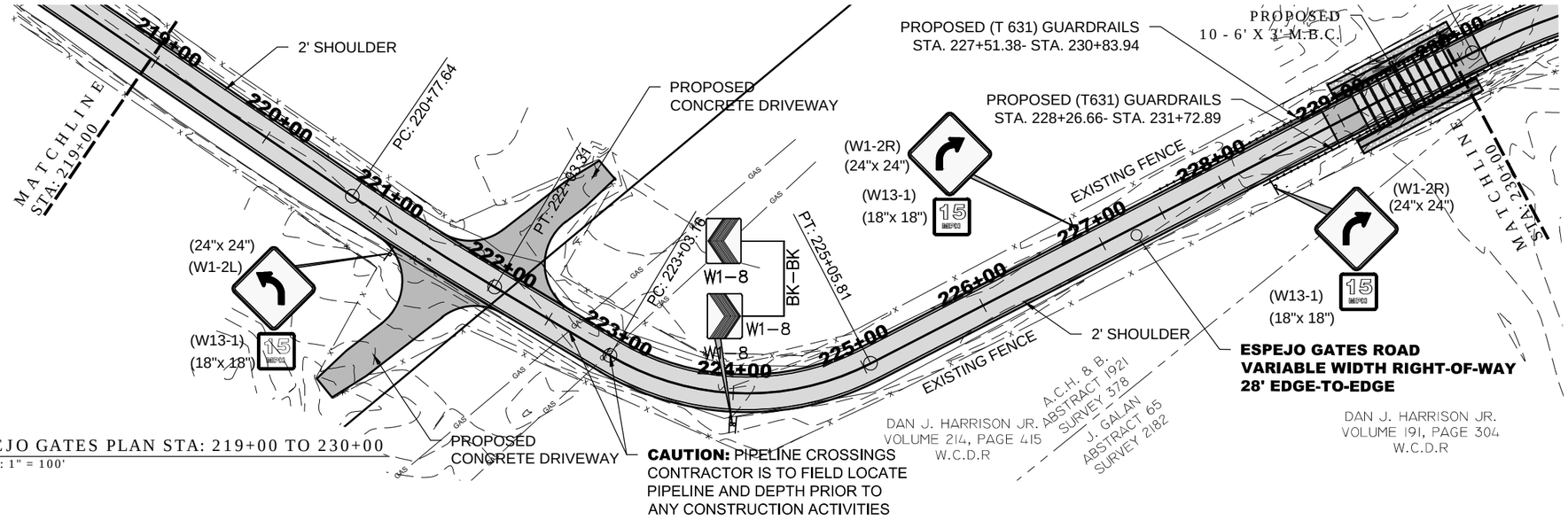

ESPEJO GATES PLAN STA: 219+00 TO 230+00

SCALE: 1" = 100'

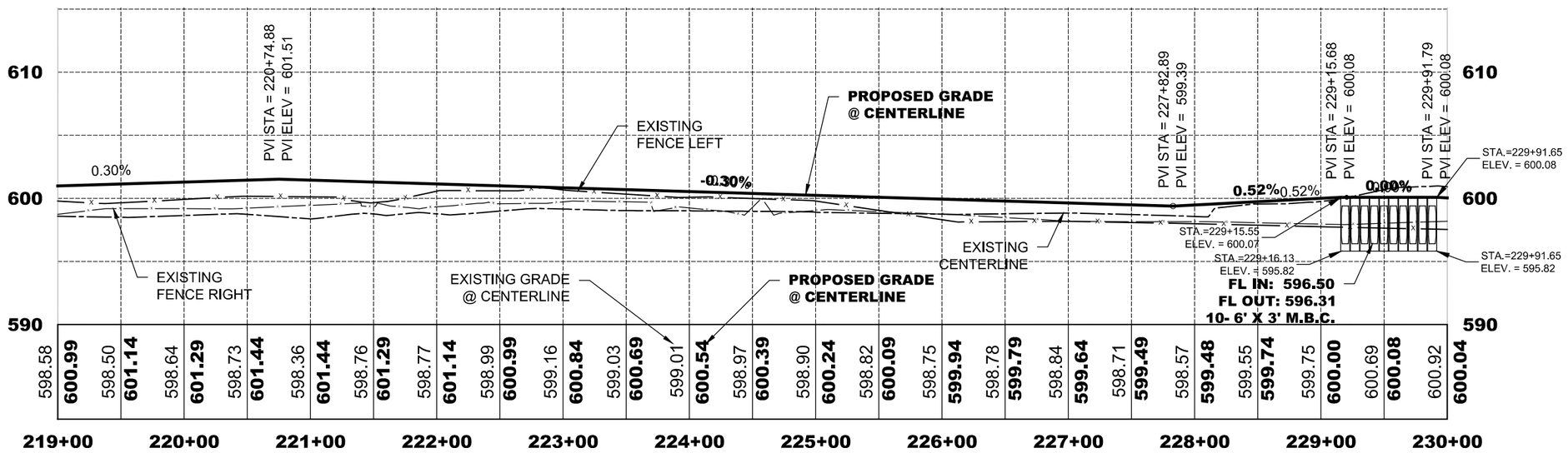

ESPEJO GATES PROFILE STA: 219+00 TO 230+00

HORIZONTAL SCALE: 1" = 100'

VERTICAL SCALE: 1" = 10'

SUPER ELEVATION TRANSITION MAX e = 6%										
CURVE ID	PI STA	RADIUS FT	DESIGN SPEED MPH	e%	RUNOUT	RUNOFF	PC STA. OF CURVE	PT STA. OF CURVE	RUNOFF	RUNOUT
ESP C13	221+40.50	2000	15	2.2%	220+05.34	220+37.64	220+77.64	222+03.31	--	--
ESP C14	224+14.50	200	15	3.7%	--	222+16.16	223+03.16	225+05.81	225+62.81	225+93.61

NOTES:

1. W1-2 (CURVE SIGNS) HAVE A DISTANCE OF 180' BEFORE TURN BEGINS
2. W1-8 HAVE 80' BETWEEN EACH
3. USE PW-1 FOR HEAD WALL

CALL BEFORE YOU DIG!
TEXAS ONE CALL PARTICIPANTS REQUEST 48 HOURS NOTICE BEFORE YOU DIG DRILL, OR BLAST - STOP, CALL!
TEXAS ONE CALL SYSTEM
811
Know what's below. Call before you dig.

UTILITY DEPARTMENTS
LAREDO, TEXAS

ELECTRIC COMPANY
A. E. P.
(956) 721-3169

ELECTRIC COMPANY
MEDINA ELECTRIC
(361) 747-5444

TELEPHONE COMPANY
AT&T
(956) 727-6749

CABLE COMPANY
TIME WARNER CABLE
(956) 721-0600

LEGEND

PROPOSED ASPHALT PAVEMENT
PROPOSED CONCRETE
EXISTING UNPAVED ROAD
EXISTING CONCRETE
OH — EXISTING OVERHEAD POWER LINE
X — EXISTING FENCE
GAS — EXISTING GAS LINE
EXISTING BOUNDARY LINE
400' EXISTING CONTOUR LINE
PP EXISTING POWER POLE
EXISTING TELEPHONE PED
EXISTING SIGN

NO.	DATE	DESCRIPTION
1	---	---
2	---	---

REVISION

PLOTTED 6-6-2016

STATUS FINAL

STATE OF TEXAS
FRANCISCO RAMOS
108833
LICENSED
PROFESSIONAL ENGINEER

DRAWN BY O.C. CHECKED BY J.A.M.

6/6/2016

S&B INFRASTRUCTURE, LTD.
2120 BLAINE ST. LAREDO, TEXAS 78043
TELEPHONE: (956) 568-2561 FAX: (956) 994-0027
ENGINEERING # F-1582 SURVEYING # 10193914

ESPEJO GATES
WEBB COUNTY, TEXAS

ESPEJO GATES
STA: 219+00 TO 230+00
PLAN & PROFILE

REFERENCE FILE NAME -

DRAWING FILE NAME U2338-Plan&Profile.SHT 17-20

L:\PROJECTS\WEBB COUNTY\U2338\Webb County TXDOT CERTEZ\dwg\SHEETS\11-17-2015-FINAL ORDER\4- PLAN AND PROFILE\Alignment Sheets\U2338-Plan&Profile.SHT 17-20.dwg

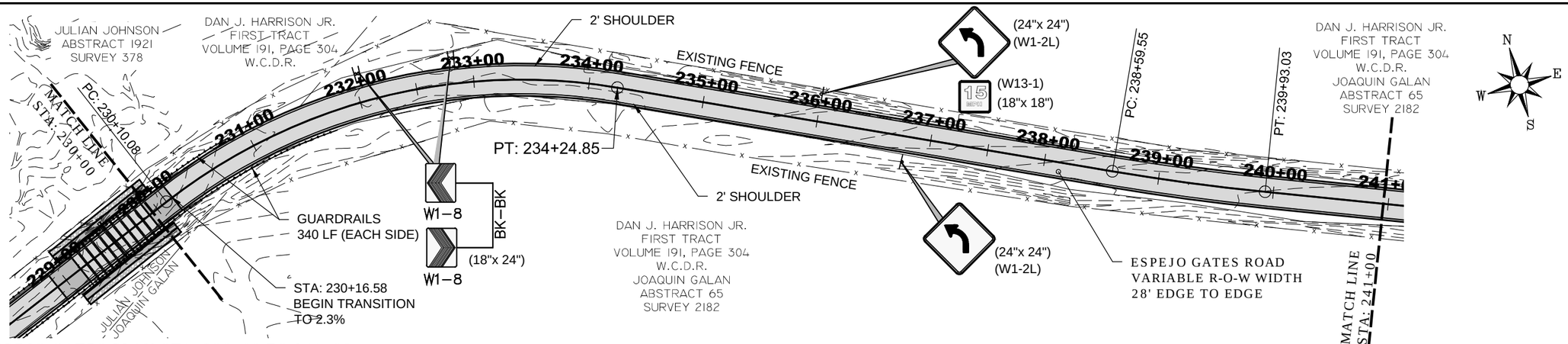

ESPEJO GATES PLAN STA: 230+00 TO 241+00

SCALE: 1" = 100'

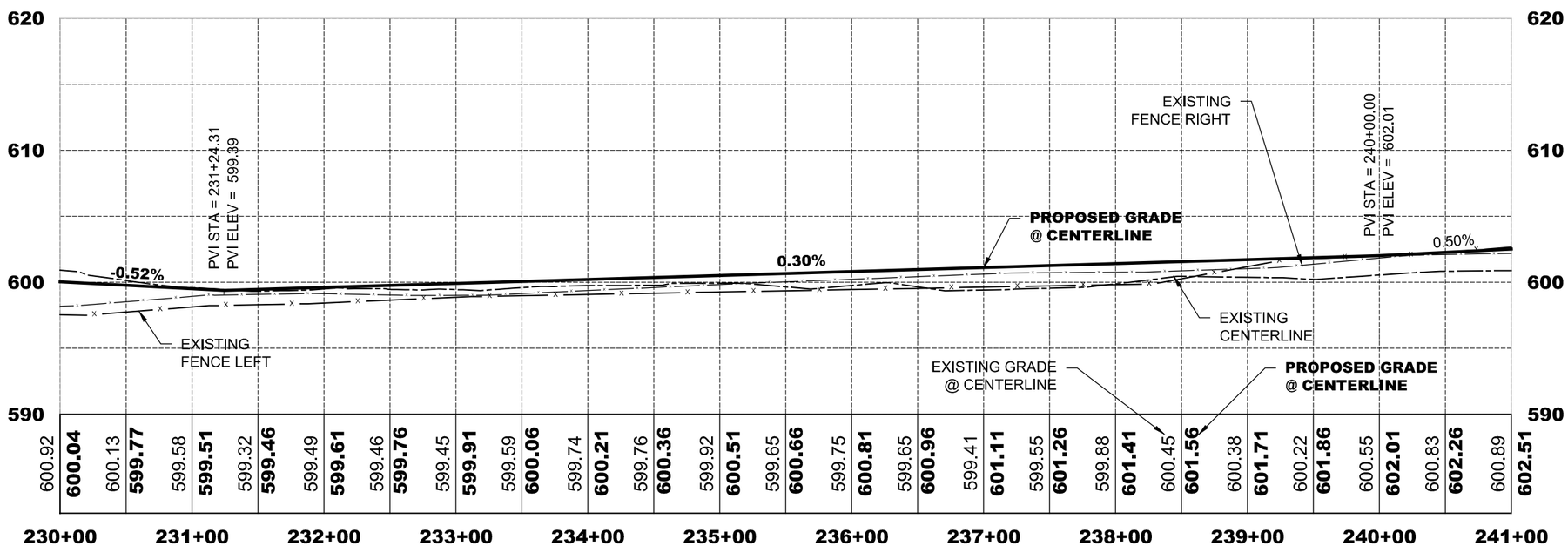

ESPEJO GATES PROFILE STA: 230+00 TO 241+00

HORIZONTAL SCALE: 1" = 100'

VERTICAL SCALE: 1" = 10'

SUPER ELEVATION TRANSITION MAX e = 6%

CURVE ID	PI STA	RADIUS FT	DESIGN SPEED MPH	e%	RUNOUT	RUNOFF	PC STA. OF CURVE	PT STA. OF CURVE	RUNOFF	RUNOUT
ESP C15	232+30.24	500	15	2.3%	---	---	230+10.08	234+24.85	234+59.85	235+90.28
ESP C16	239+26.31	2000	30	2.2%	237+83.15	238+19.55	238+59.55	239+93.03	240+33.03	240+69.43

NOTES:

1. W1-2L (CURVE SIGNS) HAVE A DISTANCE OF 180' BEFORE TURN BEGINS
2. W1-8 HAVE 80' BETWEEN EACH

CALL BEFORE YOU DIG!
TEXAS ONE CALL PARTICIPANTS REQUEST 48 HOURS NOTICE BEFORE YOU DIG DRILL, OR BLAST - STOP, CALL!
TEXAS ONE CALL SYSTEM
811
Know what's below. Call before you dig.

UTILITY DEPARTMENTS LAREDO, TEXAS

ELECTRIC COMPANY
A. E. P.
(956) 721-3169

ELECTRIC COMPANY
MEDINA ELECTRIC
(361) 747-5444

TELEPHONE COMPANY
AT&T
(956) 727-6749

CABLE COMPANY
TIME WARNER CABLE
(956) 721-0600

LEGEND

PROPOSED ASPHALT PAVEMENT
PROPOSED CONCRETE
EXISTING UNPAVED ROAD
EXISTING CONCRETE
OH — EXISTING OVERHEAD POWER LINE
X — EXISTING FENCE
GAS — EXISTING GAS LINE
EXISTING BOUNDARY LINE
400' — EXISTING CONTOUR LINE
PP — EXISTING POWER POLE
EXISTING TELEPHONE PED
EXISTING SIGN

NO.	DATE	DESCRIPTION
1	---	---
2	---	---

PLOTTED 6-6-2016

STATUS FINAL

STATE OF TEXAS
FRANCISCO RAMOS
108833
LICENSED PROFESSIONAL ENGINEER

DRAWN BY O.C. CHECKED BY J.A.M.

6/6/2016

S&B
S&B INFRASTRUCTURE, LTD.
2120 BLAINE ST. LAREDO, TEXAS 78043
TELEPHONE: (956) 568-2561 FAX: (956) 994-0027
ENGINEERING # F-1582 SURVEYING # 10193914

ESPEJO GATES
WEBB COUNTY, TEXAS

ESPEJO GATES
STA: 230+00 TO 241+00
PLAN & PROFILE

REFERENCE FILE NAME -

DRAWING FILE NAME U2338-Plan&Profile.SHT 21-24

L:\PROJECTS\WEBB COUNTY\U2338\Webb County TXDOT CERTE2\dwg\SHEETS\11-17-2015-FINAL ORDER\4- PLAN AND PROFILE\Alignment Sheets\U2338-Plan&Profile.SHT 21-24.dwg

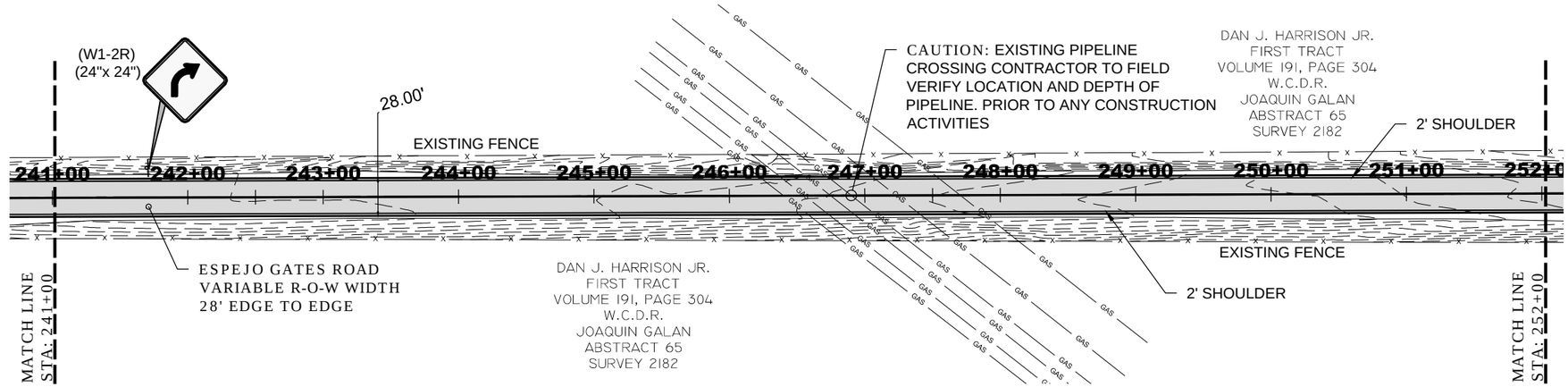

ESPEJO GATES PLAN STA: 241+00 TO 252+00

SCALE: 1" = 100'

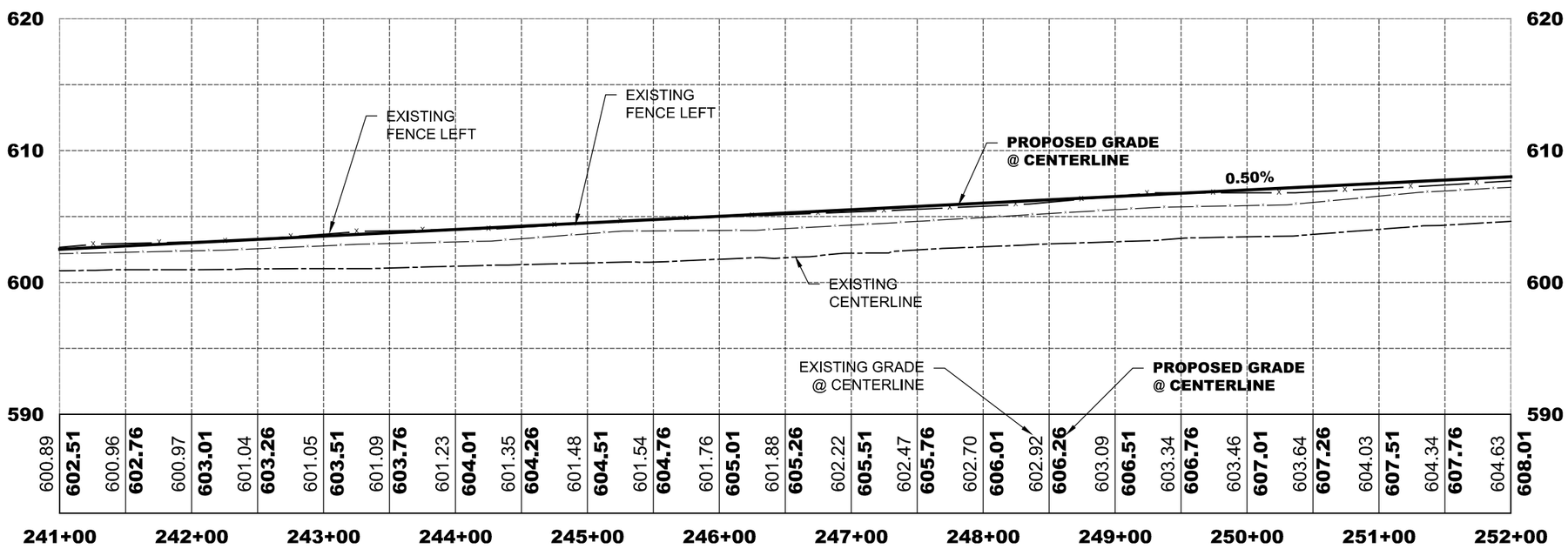

ESPEJO GATES PROFILE STA: 241+00 TO 252+00

HORIZONTAL SCALE: 1" = 100'

VERTICAL SCALE: 1" = 10'

NOTES:

1. W1-2 (CURVE SIGNS) HAVE A DISTANCE OF 180' BEFORE TURN BEGINS
2. W1-8 HAVE 80' BETWEEN EACH

CALL BEFORE YOU DIG!
TEXAS ONE CALL PARTICIPANTS REQUEST 48 HOURS NOTICE BEFORE YOU DIG DRILL, OR BLAST - STOP, CALL!
TEXAS ONE CALL SYSTEM
811
Know what's below. Call before you dig.

UTILITY DEPARTMENTS LAREDO, TEXAS

ELECTRIC COMPANY
A. E. P.
(956) 721-3169

ELECTRIC COMPANY
MEDINA ELECTRIC
(361) 747-5444

TELEPHONE COMPANY
AT&T
(956) 727-6749

CABLE COMPANY
TIME WARNER CABLE
(956) 721-0600

LEGEND

- PROPOSED ASPHALT PAVEMENT
- PROPOSED CONCRETE
- EXISTING UNPAVED ROAD
- EXISTING CONCRETE
- OH — EXISTING OVERHEAD POWER LINE
- X — EXISTING FENCE
- GAS — EXISTING GAS LINE
- EXISTING BOUNDARY LINE
- 400' — EXISTING CONTOUR LINE
- PP — EXISTING POWER POLE
- EXISTING TELEPHONE PED
- EXISTING SIGN

NO.	DATE	REVISION DESCRIPTION
1	---	---
2	---	---

PLOTTED 6-6-2016

STATUS FINAL

STATE OF TEXAS
FRANCISCO RAMOS
108833
LICENSED PROFESSIONAL ENGINEER

DRAWN BY O.C. CHECKED BY J.A.M.

6/6/2016

S&B INFRASTRUCTURE, LTD.
2120 BLAINE ST. LAREDO, TEXAS 78043
TELEPHONE: (956) 568-2561 FAX: (956) 994-0227
ENGINEERING # F-1582 SURVEYING # 10193914

ESPEJO GATES
WEBB COUNTY, TEXAS

ESPEJO GATES
STA: 241+00 TO 252+00
PLAN & PROFILE

REFERENCE FILE NAME
-
DRAWING FILE NAME
U2338-Plan&Profile.SHT 21-24

L:\PROJECTS\WEBB COUNTY\U2338\Webb County TXDOT CERTEZ\dwg\SHEETS\11-17-2015-FINAL ORDER\4- PLAN AND PROFILE\Alignment Sheets\U2338-Plan&Profile.SHT 21-24.dwg

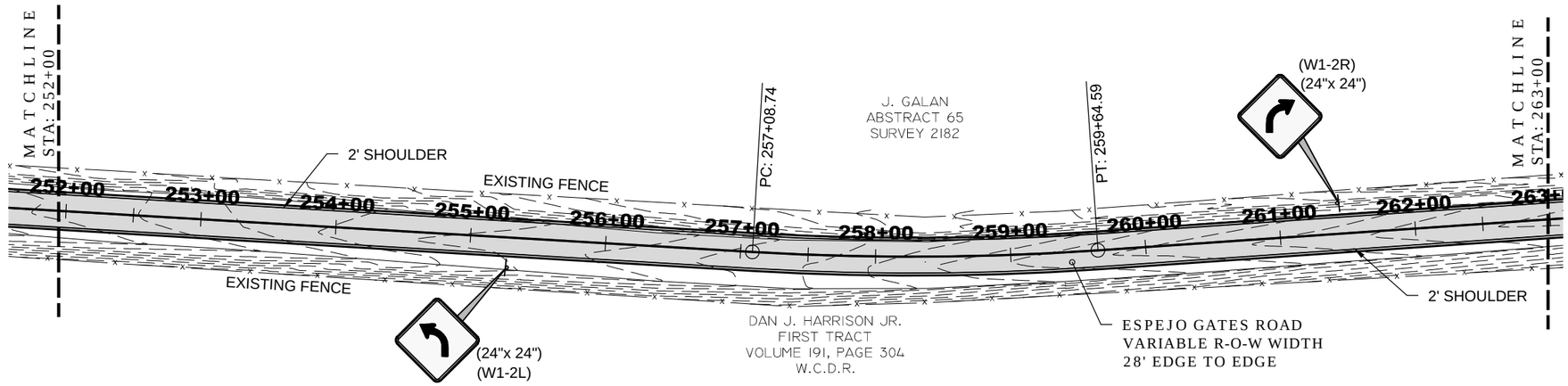

ESPEJO GATES PLAN STA: 252+00 TO 263+00

SCALE: 1" = 100'

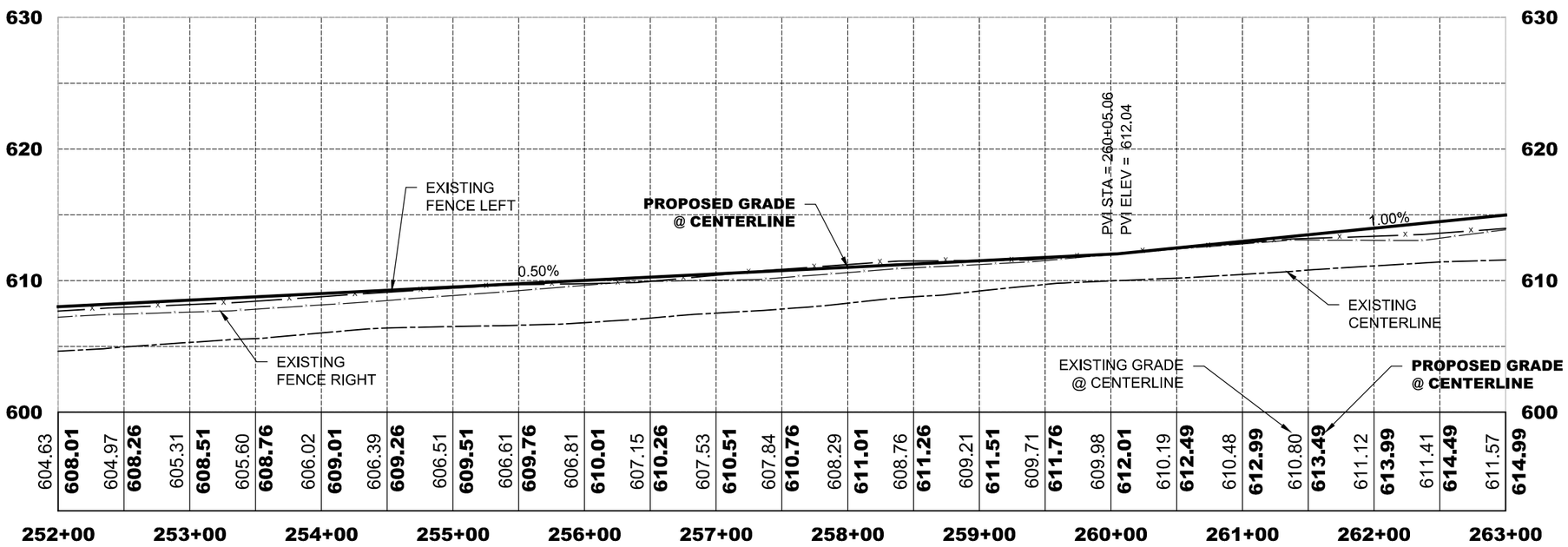

ESPEJO GATES PROFILE STA: 252+00 TO 263+00

HORIZONTAL SCALE: 1" = 100'

VERTICAL SCALE: 1" = 10'

SUPER ELEVATION TRANSITION MAX e = 6%										
CURVE ID	PI STA	RADIUS FT	DESIGN SPEED MPH	e%	RUNOUT	RUNOFF	PC STA. OF CURVE	PT STA. OF CURVE	RUNOFF	RUNOUT
ESP C19	270+02.14	2000	30	2.2%	256+32.34	256+68.74	257+08.74	259+64.59	260+04.59	260+40.99

NOTES:

1. W1-2L (CURVE SIGNS) HAVE A DISTANCE OF 180' BEFORE TURN BEGINS
2. W1-8 HAVE 80' BETWEEN EACH

CALL BEFORE YOU DIG!
TEXAS ONE CALL PARTICIPANTS REQUEST 48 HOURS NOTICE BEFORE YOU DIG DRILL, OR BLAST - STOP, CALL!
TEXAS ONE CALL SYSTEM
811
Know what's below. Call before you dig.

UTILITY DEPARTMENTS
LAREDO, TEXAS

ELECTRIC COMPANY
A. E. P.
(956) 721-3169

ELECTRIC COMPANY
MEDINA ELECTRIC
(361) 747-5444

TELEPHONE COMPANY
AT&T
(956) 727-6749

CABLE COMPANY
TIME WARNER CABLE
(956) 721-0600

LEGEND

PROPOSED ASPHALT PAVEMENT
PROPOSED CONCRETE
EXISTING UNPAVED ROAD
EXISTING CONCRETE
OH — EXISTING OVERHEAD POWER LINE
X — EXISTING FENCE
GAS — EXISTING GAS LINE
EXISTING BOUNDARY LINE
400' EXISTING CONTOUR LINE
PP EXISTING POWER POLE
EXISTING TELEPHONE PED
EXISTING SIGN

NO.	DATE	REVISION DESCRIPTION
1	---	---
2	---	---

PLOTTED 6-6-2016

STATUS FINAL

STATE OF TEXAS
FRANCISCO RAMOS
108833
LICENSED PROFESSIONAL ENGINEER

DRAWN BY O.C. CHECKED BY J.A.M.

6/6/2016

S&B INFRASTRUCTURE, LTD.
2120 BLAINE ST. LAREDO, TEXAS 78043
TELEPHONE: (956) 568-2561 FAX: (956) 994-0027
ENGINEERING # F-1582 SURVEYING # 10193914

ESPEJO GATES
WEBB COUNTY, TEXAS

ESPEJO GATES
STA: 252+00 TO 263+00
PLAN & PROFILE

REFERENCE FILE NAME -

DRAWING FILE NAME U2338-Plan&Profile.SHT 21-24

L:\PROJECTS\WEBB COUNTY\U2338\Webb County TXDOT CERTEZ\dwg\SHEETS\11-17-2015-FINAL ORDER\4- PLAN AND PROFILE\Alignment Sheets\U2338-Plan&Profile.SHT 21-24.dwg

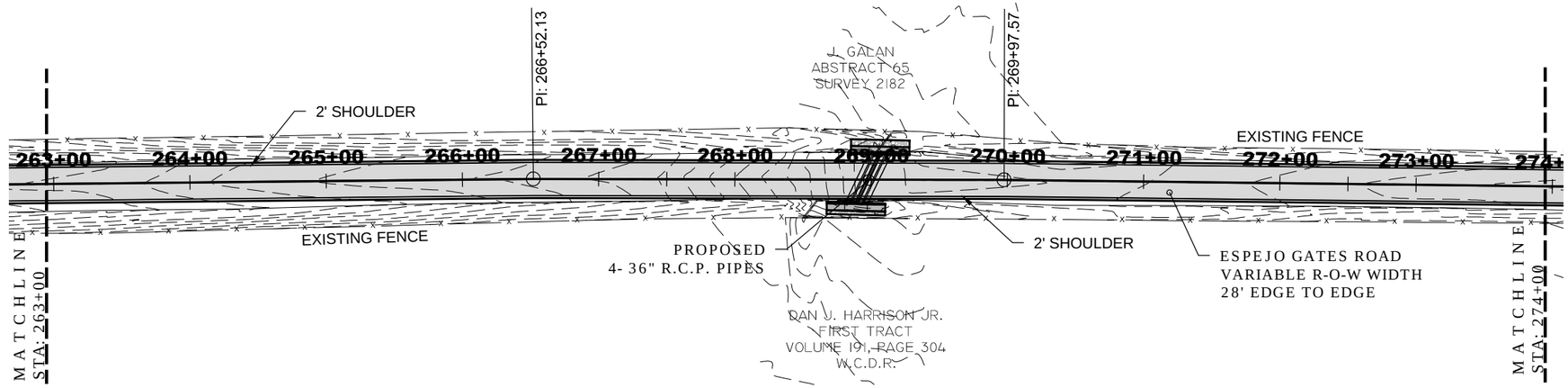

ESPEJO GATES PLAN STA: 263+00 TO 274+00

SCALE: 1" = 100'

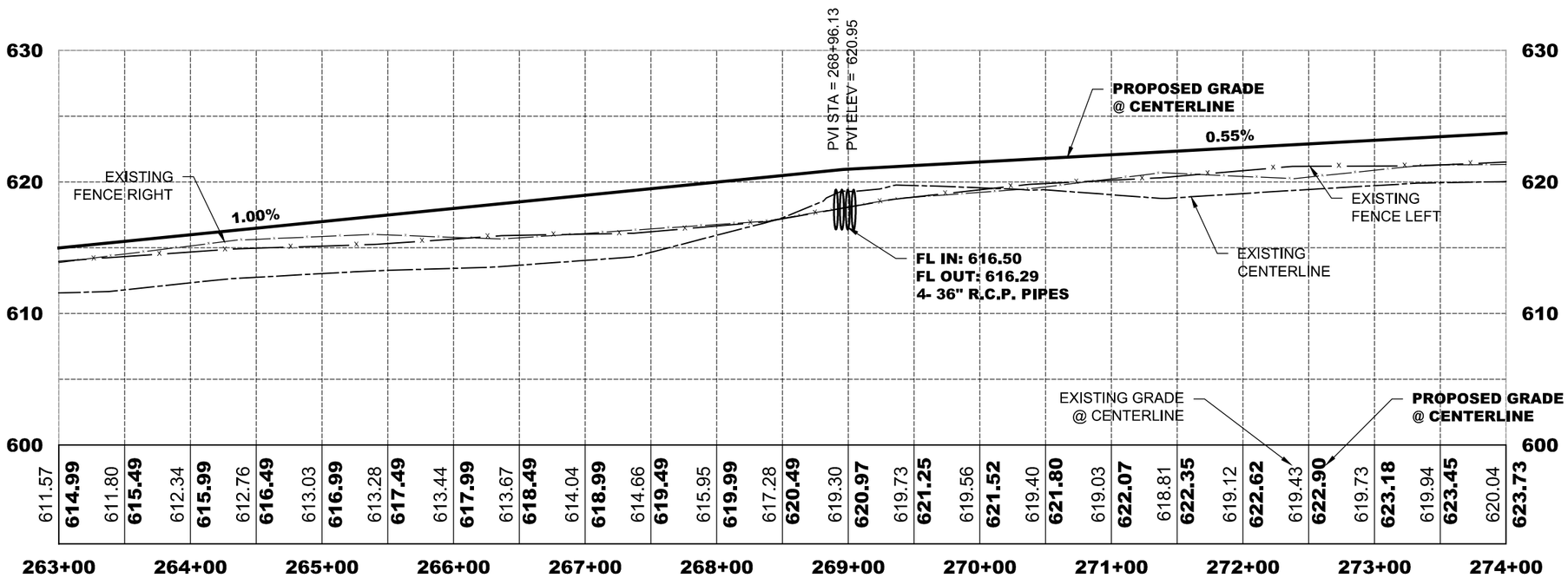

ESPEJO GATES PROFILE STA: 263+00 TO 274+00

HORIZONTAL SCALE: 1" = 100'
VERTICAL SCALE: 1" = 10'

NOTES:

1. W1-2 (CURVE SIGNS) HAVE A DISTANCE OF 180' BEFORE TURN BEGINS
2. W1-8 HAVE 80' BETWEEN EACH
3. USE CH-PW-S FOR HEAD WALL

CALL BEFORE YOU DIG!
TEXAS ONE CALL PARTICIPANTS REQUEST
48 HOURS NOTICE BEFORE YOU DIG
DRILL, OR BLAST - STOP, CALL!
TEXAS ONE CALL SYSTEM
811
Know what's below. Call before you dig.

UTILITY DEPARTMENTS
LAREDO, TEXAS

ELECTRIC COMPANY
A. E. P.
(956) 721-3169

ELECTRIC COMPANY
MEDINA ELECTRIC
(361) 747-5444

TELEPHONE COMPANY
AT&T
(956) 727-6749

CABLE COMPANY
TIME WARNER CABLE
(956) 721-0600

LEGEND

PROPOSED ASPHALT PAVEMENT
PROPOSED CONCRETE
EXISTING UNPAVED ROAD
EXISTING CONCRETE
OH — EXISTING OVERHEAD POWER LINE
X — EXISTING FENCE
GAS — EXISTING GAS LINE
EXISTING BOUNDARY LINE
400' EXISTING CONTOUR LINE
PP EXISTING POWER POLE
EXISTING TELEPHONE PED
EXISTING SIGN

NO.	DATE	DESCRIPTION
1	---	---
2	---	---

PLOTTED 6-6-2016
STATUS FINAL

STATE OF TEXAS
FRANCISCO RAMOS
108833
LICENSED PROFESSIONAL ENGINEER

DRAWN BY O.C.
CHECKED BY J.A.M.

6/6/2016

S&B INFRASTRUCTURE, LTD.
2120 BLAINE ST. LAREDO, TEXAS 78043
TELEPHONE: (956) 568-2561 FAX: (956) 994-0027
ENGINEERING # F-1582 SURVEYING # 10193914

ESPEJO GATES
WEBB COUNTY, TEXAS

ESPEJO GATES
STA: 263+00 TO 274+00
PLAN & PROFILE

REFERENCE FILE NAME
-
DRAWING FILE NAME
U2338-Plan&Profile.SHT 21-24

L:\PROJECTS\WEBB COUNTY\U2338\Webb County TXDOT CERTEZ\dwg\SHEETS\11-17-2015-FINAL ORDER\4- PLAN AND PROFILE\Alignment Sheets\U2338-Plan&Profile.SHT 21-24.dwg

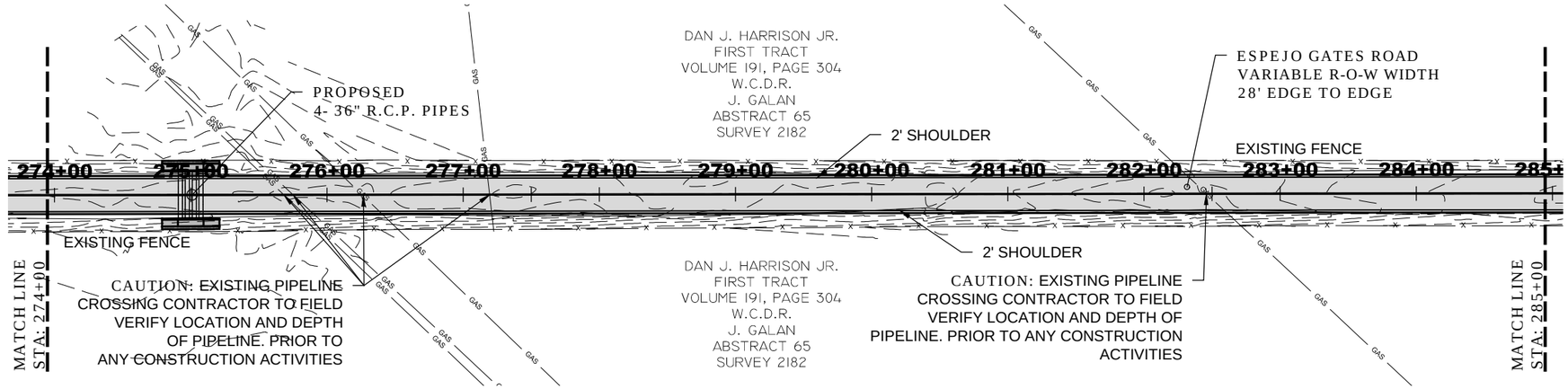

ESPEJO GATES PLAN STA: 274+00.00 TO 285+00.00

SCALE: 1" = 100'

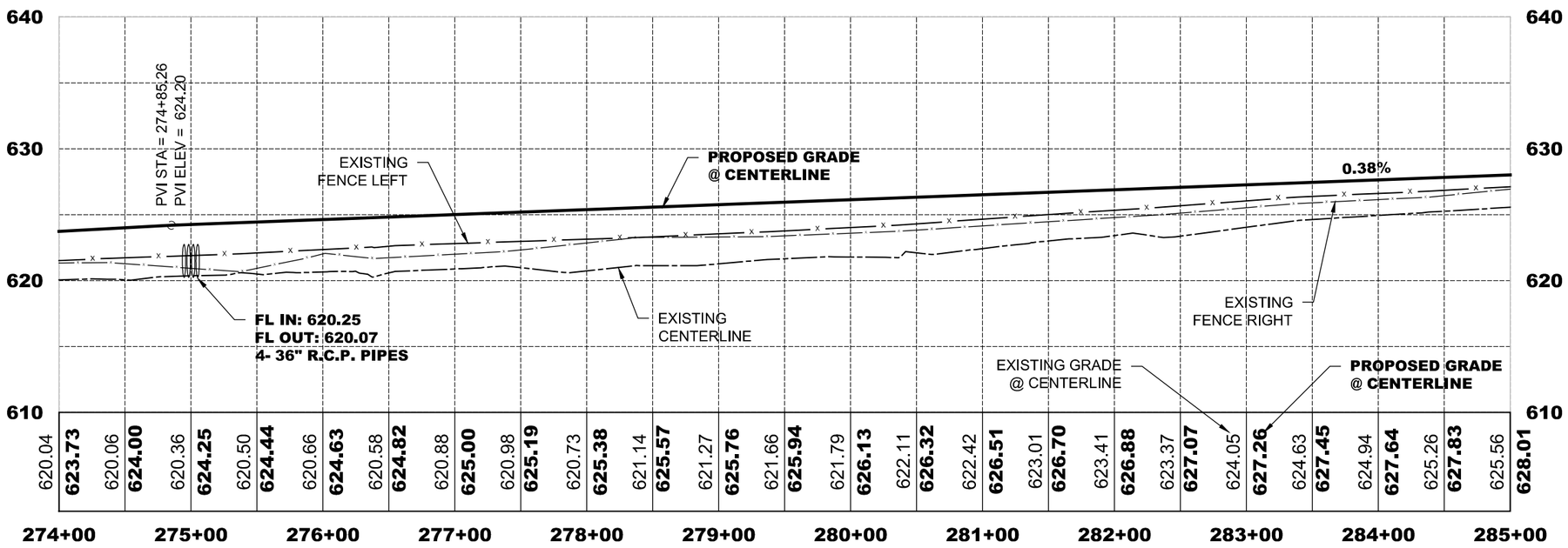

ESPEJO GATES PROFILE STA: 274+00 TO 285+00

HORIZONTAL SCALE: 1" = 100'
VERTICAL SCALE: 1" = 10'

NOTES:

1. W1-2 (CURVE SIGNS) HAVE A DISTANCE OF 180' BEFORE TURN BEGINS
2. W1-8 HAVE 80' BETWEEN EACH
3. USE CH-PW-0 FOR HEAD WALL

CALL BEFORE YOU DIG!
TEXAS ONE CALL PARTICIPANTS REQUEST
48 HOURS NOTICE BEFORE YOU DIG
DRILL, OR BLAST - STOP, CALL!
TEXAS ONE CALL SYSTEM
811
Know what's below. Call before you dig.

UTILITY DEPARTMENTS
LAREDO, TEXAS

ELECTRIC COMPANY
A. E. P.
(956) 721-3169

ELECTRIC COMPANY
MEDINA ELECTRIC
(361) 747-5444

TELEPHONE COMPANY
AT&T
(956) 727-6749

CABLE COMPANY
TIME WARNER CABLE
(956) 721-0600

LEGEND

PROPOSED ASPHALT PAVEMENT
PROPOSED CONCRETE
EXISTING UNPAVED ROAD
EXISTING CONCRETE
OH — EXISTING OVERHEAD POWER LINE
X — EXISTING FENCE
GAS — EXISTING GAS LINE
EXISTING BOUNDARY LINE
400' — EXISTING CONTOUR LINE
PP — EXISTING POWER POLE
EXISTING TELEPHONE PED
EXISTING SIGN

NO.	DATE	DESCRIPTION
1	---	---
2	---	---

PLOTTED 6-6-2016
STATUS FINAL

STATE OF TEXAS
FRANCISCO RAMOS
108833
LICENSED PROFESSIONAL ENGINEER

DRAWN BY O.C. CHECKED BY J.A.M.

6/6/2016

S&B INFRASTRUCTURE, LTD.
2120 BLAINE ST. LAREDO, TEXAS 78043
TELEPHONE: (956) 568-2561 FAX: (956) 994-0227
ENGINEERING # F-1582 SURVEYING # 10193914

ESPEJO GATES
WEBB COUNTY, TEXAS

ESPEJO GATES
STA: 274+00 TO 285+00
PLAN & PROFILE

REFERENCE FILE NAME
DRAWING FILE NAME
U2338-Plan&Profile.SHT 25-26

L:\PROJECTS\WEBB COUNTY\U2338\Webb County TXDOT CERTEZ\dwg\SHEETS\11-17-2015-FINAL ORDER\4- PLAN AND PROFILE\Alignment Sheets\U2338-Plan&Profile.SHT 25-26.dwg

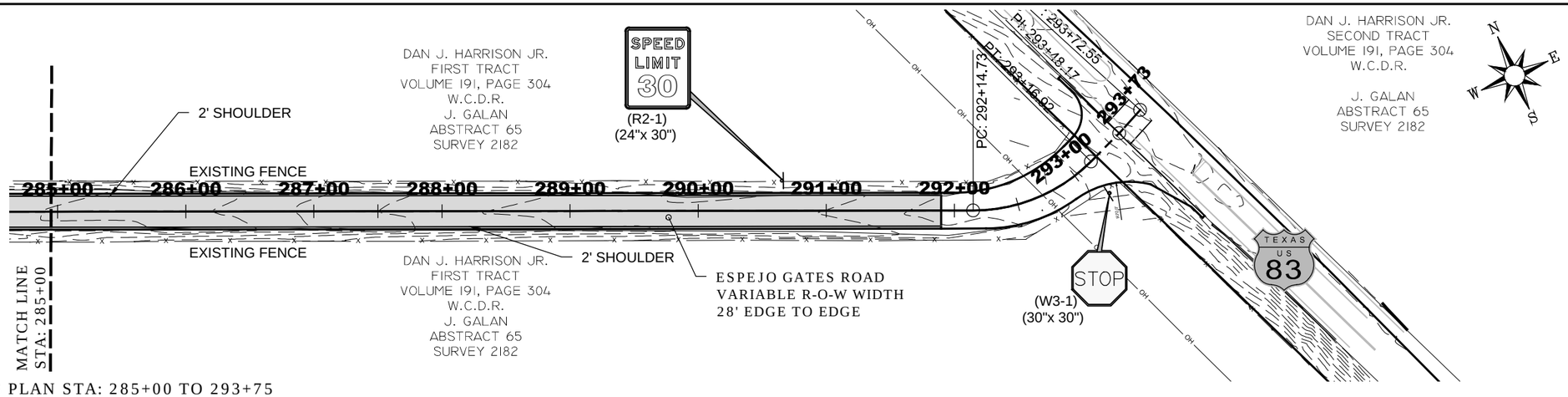

ESPEJO GATES PLAN STA: 285+00 TO 293+75

SCALE: 1" = 100'

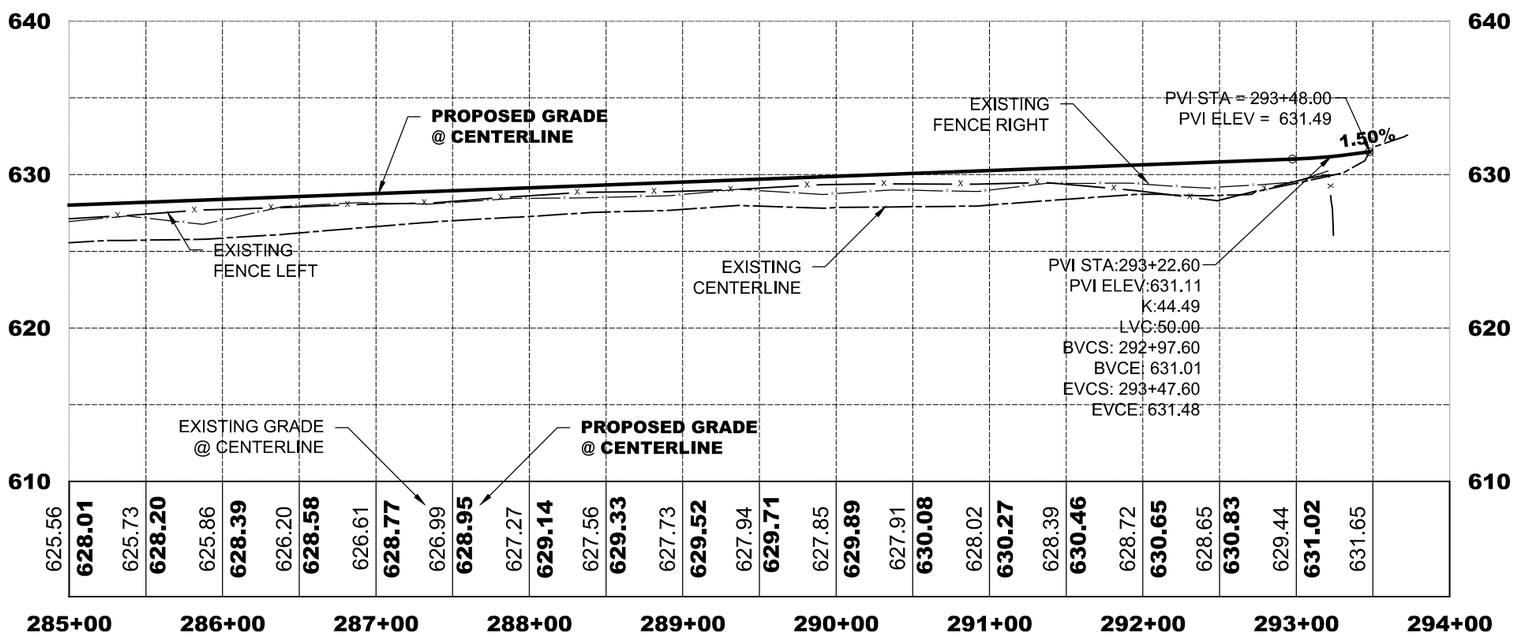

ESPEJO GATES PROFILE STA: 285+00 TO 293+75

HORIZONTAL SCALE: 1" = 100'

VERTICAL SCALE: 1" = 10'

CALL BEFORE YOU DIG!
TEXAS ONE CALL PARTICIPANTS REQUEST 48 HOURS NOTICE BEFORE YOU DIG DRILL, OR BLAST - STOP, CALL!
TEXAS ONE CALL SYSTEM
811
Know what's below. Call before you dig.

UTILITY DEPARTMENTS
LAREDO, TEXAS

ELECTRIC COMPANY
A. E. P.
(956) 721-3169

ELECTRIC COMPANY
MEDINA ELECTRIC
(361) 747-5444

TELEPHONE COMPANY
AT&T
(956) 727-6749

CABLE COMPANY
TIME WARNER CABLE
(956) 721-0600

LEGEND

- PROPOSED ASPHALT PAVEMENT
- PROPOSED CONCRETE
- EXISTING UNPAVED ROAD
- EXISTING CONCRETE
- OH — EXISTING OVERHEAD POWER LINE
- X — EXISTING FENCE
- GAS — EXISTING GAS LINE
- EXISTING BOUNDARY LINE
- 400' — EXISTING CONTOUR LINE
- PP — EXISTING POWER POLE
- EXISTING TELEPHONE PED
- EXISTING SIGN

NO.	DATE	DESCRIPTION
1	---	---
2	---	---

PLOTTED 6-6-2016

STATUS FINAL

STATE OF TEXAS
FRANCISCO RAMOS
108833
LICENSED PROFESSIONAL ENGINEER

DRAWN BY O.C. CHECKED BY J.A.M.

6/6/2016

S&B INFRASTRUCTURE, LTD.
2120 BLAINE ST. LAREDO, TEXAS 78043
TELEPHONE: (956) 568-2561 FAX: (956) 994-0047
ENGINEERING # F-1582 SURVEYING # 10193914

ESPEJO GATES
WEBB COUNTY, TEXAS

ESPEJO GATES
STA: 285+00 TO 293+75
PLAN & PROFILE

REFERENCE FILE NAME -

DRAWING FILE NAME U2338-Plan&Profile.SHT 25-26

L:\PROJECTS\WEBB COUNTY\U2338\Webb County TXDOT CERTEZ\dwg\SHEETS\11-17-2015-FINAL ORDER\4- PLAN AND PROFILE\Alignment Sheets\U2338-Plan&Profile.SHT 25-26.dwg

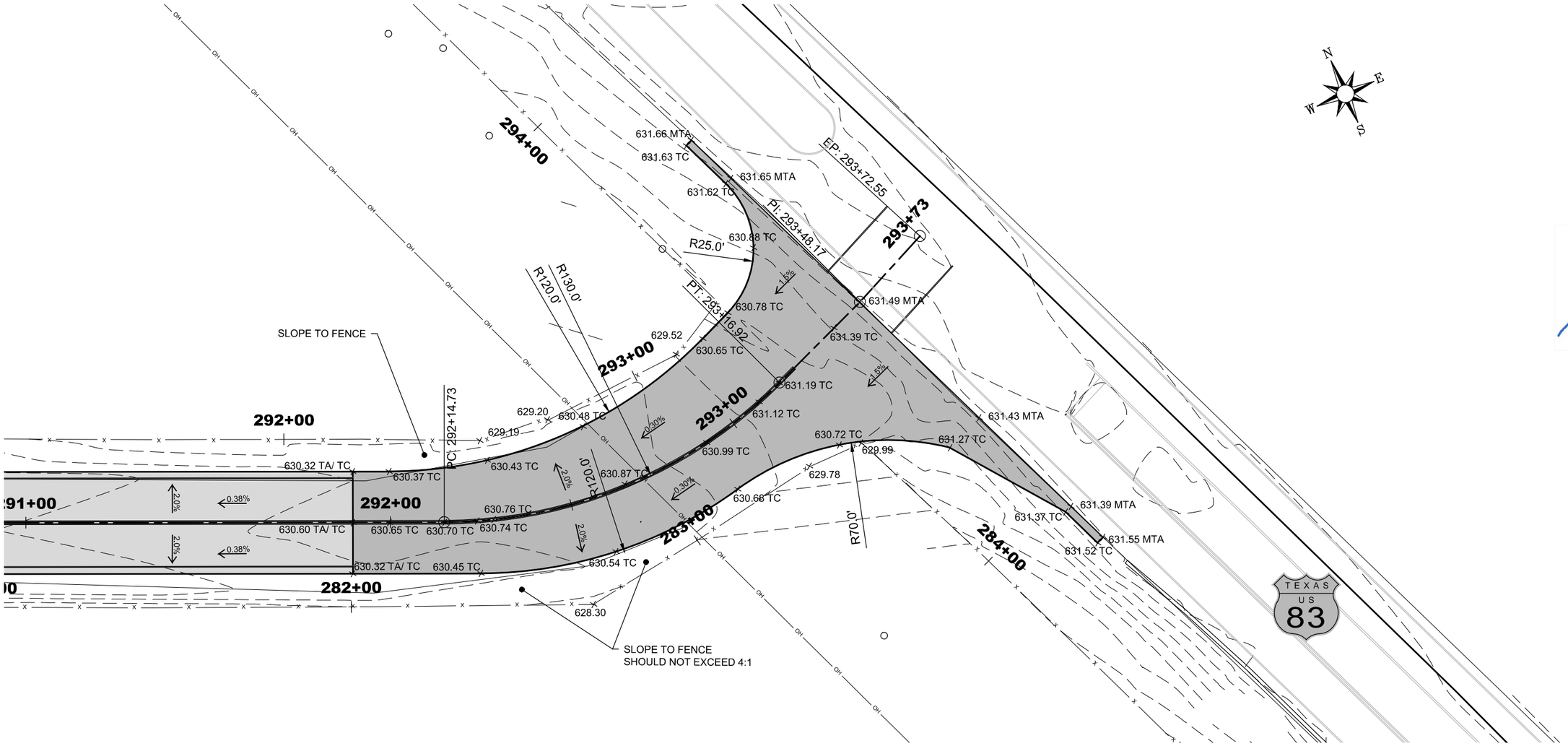

ESPEJO GATES PLAN INTERSECTION I-83

SCALE: 1" = 30'

CALL BEFORE YOU DIG!
TEXAS ONE CALL PARTICIPANTS REQUEST
48 HOURS NOTICE BEFORE YOU DIG
DRILL, OR BLAST - STOP, CALL!
TEXAS ONE CALL SYSTEM
811

UTILITY DEPARTMENTS
LAREDO, TEXAS

WATER DISTRIBUTION AND SANITARY SEWER
ROLANDO LOZANO
LAREDO WATER UTILITIES DEPARTMENT
(956) 794-1625

ELECTRIC COMPANY
A. E. P.
(956) 721-3169

TELEPHONE COMPANY
ATT
(956) 727-6749

CABLE COMPANY
TIME WARNER CABLE
(956) 721-0600

LEGEND

	PROPOSED ASPHALT PAVEMENT
	PROPOSED CONCRETE
	EXISTING UNPAVED ROAD
	EXISTING CONCRETE
OH	EXISTING OVERHEAD POWER LINE
X	EXISTING FENCE
GAS	EXISTING GAS LINE
	EXISTING BOUNDARY LINE
400'	EXISTING CONTOUR LINE
PP	EXISTING POWER POLE
	EXISTING TELEPHONE PED
	EXISTING SIGN

NO.	DATE	DESCRIPTION
1	---	---
2	---	---

PLOTTED 6-6-2016

STATUS FINAL

STATE OF TEXAS
FRANCISCO RAMOS
108833
LICENSED
PROFESSIONAL ENGINEER

DRAWN BY O.C.
CHECKED BY F.R.

6/6/2016

S&B INFRASTRUCTURE, LTD.
2120 BLAINE ST. LAREDO, TEXAS 78043
TELEPHONE: (956) 568-2561 FAX: (956) 994-0027
ENGINEERING # F-1582 SURVEYING # 10193914

ESPEJO GATES
WEBB COUNTY, TEXAS
TCDP# 713110

ESPEJO GATES
DETAILED GRADING
I-83 INTERSECTION

REFERENCE FILE NAME -
DRAWING FILE NAME U2338-Plan&Profile.SHT 25-26

L:\PROJECTS\WEBB COUNTY\U2338\Webb County TXDOT CERTEZ\dwg\SHEETS\11-17-2015-FINAL ORDER\4- PLAN AND PROFILE\Alignment Sheets\U2338-Plan&Profile.SHT 25-26.dwg

REFLECTOR UNIT SIZES FOR DELINEATORS AND OBJECT MARKERS

	SIZE 1	SIZE 2	SIZE 3	SIZE 4
DEVICE	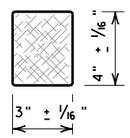	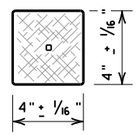	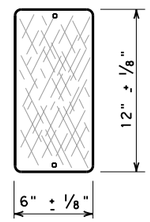	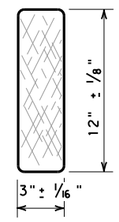
SHEETING	Yellow, White or Red Type B or C reflective sheeting			
NOTE	1. Size 1 and 4 - Direct applied reflective sheeting for use on flexible post (flx). 2. Size 2 and 3 - For use on wing channel (wc) post only. Use approved metal, plastic or fiberglass backplate with 17/64" mounting holes.			

DELINEATORS

	SINGLE		DOUBLE	
DEVICE	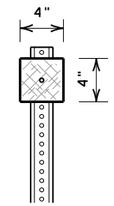	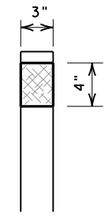	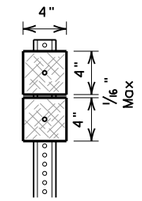	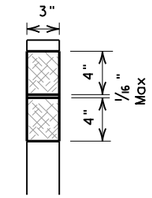
	1-Size 2 reflector unit	1-Size 1 reflector unit	2-Size 2 reflector units	2-Size 1 reflector units
SHEETING	Yellow, White or Red Type B or C Reflective Sheeting			
POST TYPE	WC	FLX	WC	FLX
MOUNT TYPE	GND	GND, SRF	GND	GND, SRF

OBJECT MARKERS

	Type 1 (OM-1)	Type 2 (OM-2)			Type 3 (OM-3)			Type 4 (OM-4)
	OM-1	OM-2X	OM-2Y	OM-2Z	OM-3L	OM-3R	OM-3C	OM-4
DEVICE	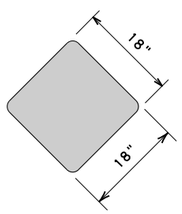	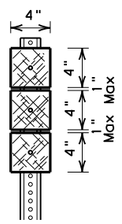	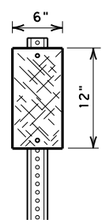	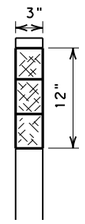	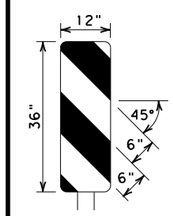	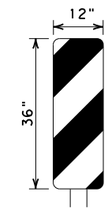	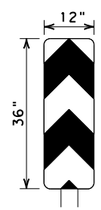	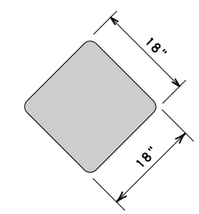
		3-Size 2 reflector units	1-Size 3 reflector unit	3-Size 1 reflector units or 1-Size 4 reflector unit				
SHEETING	Yellow-Type B_{FL} or C_{FL} Sheeting	Yellow - Type B or C Sheeting			Alternating acrylic black and retroflective yellow - Type B_{FL} or C_{FL} Sheeting			Red -Type B_{FL} or C_{FL} Sheeting
POST TYPE	TWT	WC	WC	FLX	TWT			TWT
MOUNT TYPE	WAS, WAP	GND	GND	GND, SRF	WAS, WAP			WAS, WAP

D & OM DESCRIPTIVE CODES

INSTL DEL ASSM (D-XX)SZ X (XXX)XXX(XX)

NUMBER OF REFLECTORS
S = Single
D = Double

COLOR OF REFLECTORS
W = White
Y = Yellow
R = Red

REFLECTOR UNIT SIZE
1 or 2

TYPE OF POST OR DELINEATOR
WC = Wing Channel Post
FLX = Flexible Post
BRF = Barrier Reflector

TYPE OF MOUNT
GND = Embedded (drivable or set in concrete)
CTB = Concrete Barrier Mount
GF1 or GF2 = Guard Fence Attachment
SRF = Surface Mount

DIRECTION
If Required
BI = Bi-Directional
BR = Bi-Directional with red on back

INSTL OM ASSM (OM-XX) (XXX)XXX(XX)

TYPE OF OBJECT MARKER
1, 2, 3, or 4

NUMBER OF REFLECTORS OR DIRECTION
X = 3-Size 2 reflector units (Type 2 only)
Y = 1-Size 3 reflector unit (Type 2 only)
Z = 3-Size 1 or 1-Size 4 reflector unit(s)(Type 2 only)
L = Left Side (Type 3 Object Marker only)
R = Right Side (Type 3 Object Marker only)
C = Center (Type 3 Object Marker only)

TYPE OF POST
WC = Wing Channel Post
FLX = Flexible Post
TWT = Thin Walled Tubing

TYPE OF MOUNT
GND = Embedded (drivable)
SRF = Surface Mount
WAS = Wedge Anchor Steel
WAP = Wedge Anchor Plastic

DIRECTION
If Required
BI = Bi-Directional

DEPARTMENTAL MATERIAL SPECIFICATIONS	
FLEXIBLE DELINEATOR & OBJECT MARKER POSTS (EMBEDDED & SURFACE MOUNT TYPES)	DMS-4400
SIGN FACE MATERIALS	DMS-8300
DELINEATORS, OBJECT MARKERS AND BARRIER REFLECTORS	DMS-8600

BARRIER REFLECTORS (BRF)

	GF1	GF2	CTB
DEVICE	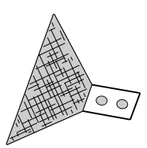		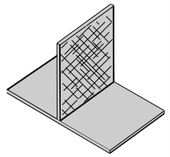
	1. Barrier reflectors shall meet the requirements of DMS 8600. 2. Approved Barrier Reflectors are listed on the "Barrier Reflectors" Material Producer List at: www.txdot.gov.		
SHEETING	Yellow, White, Red		
NOTE	1. Minimum 9 square inches of reflective sheeting surface area.		

CHEVRONS

DEVICE	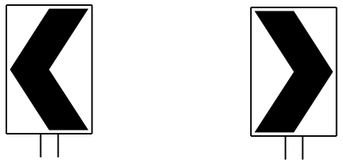 W1-8			
SIZE (W x L)	18"x 24" (Conventional)	24"x 30" (Conventional Oversize)	30"x 36" (Expressway)	36" x 48" (Freeway)
MOUNTING HEIGHT	4'-0" or 7'-0"		7'-0" Only	
NOTE	1. CHEVRON (W1-8) signs and ONE DIRECTION LARGE ARROW (W1-6) Signs shall be installed per Sign Mounting Details (SMD) Standard Sheets and paid under Item 644 (Small Roadside Sign Assemblies). 2. The Texas version of the ONE DIRECTION LARGE ARROW sign (W1-9T) may be used instead of the ONE DIRECTIONAL LARGE ARROW (W1-6).			

ONE DIRECTION LARGE ARROW

DEVICE	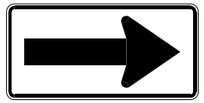 W1-6	
SIZE (W x L)	48" x 24" (Conventional)	60" x 30" (Expressway & Freeway)
MOUNTING HEIGHT	7'-0"	

NOTE:
Delineator and object marker backplates and sign substrates shall be 0.080" Aluminum sign blank to conform to ASTM B-209 Alloy 6061-T6 or approved alternative.

Texas Department of Transportation — Traffic Operations Division Standard

DELINEATOR & OBJECT MARKER MATERIAL DESCRIPTION

D & OM(1)-15

FILE: dom1-15.dgn	DN: TXDOT	CK: TXDOT	DW: TXDOT	CK: TXDOT
©TxDOT August 2004	CONT	SECT	JOB	HIGHWAY
REVISIONS				
10-09 3-15	DIST	COUNTY		SHEET NO.
4-10				91 OF 152

20A

DISCLAIMER:
The use of this standard is governed by the "Texas Engineering Practice Act". No warranty of any kind is made by TxDOT for any purpose whatsoever. TxDOT assumes no responsibility for the conversion of this standard to other formats or for incorrect results or damages resulting from its use.

DATE:
FILE:

POST TYPE AND SUPPORT FOUNDATION DETAILS

WING CHANNEL (WC)

GND

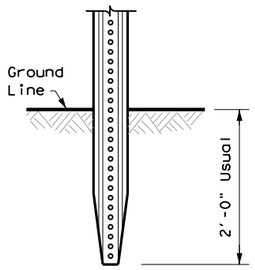

NOTES

1. Embedded Wing Channel (WC) post option may be used for Type 2 Object Markers and Delineators only.
2. 1.12 lbs/ft steel per ASTM A 1011 SS Gr. 50, or ASTM A499.

FLEXIBLE POSTS (FLX)

GND

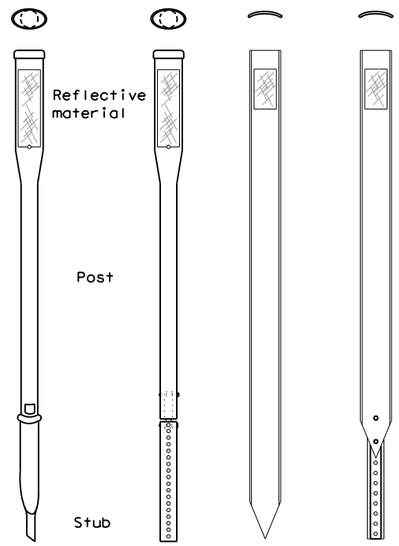

EMBEDDED

SRF

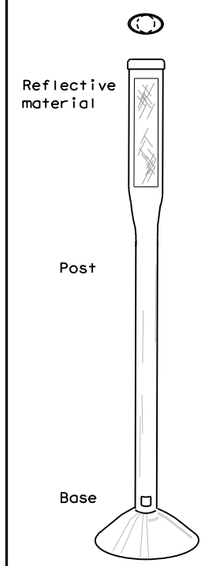

SURFACE MOUNT

NOTES

1. See "Flexible Delineator and Object Marker Posts" Material Producer List for approved devices.
2. Install per manufacturer's recommendations.
3. Post length may vary to meet field conditions.

WEDGE ANCHOR SYSTEMS

WAS

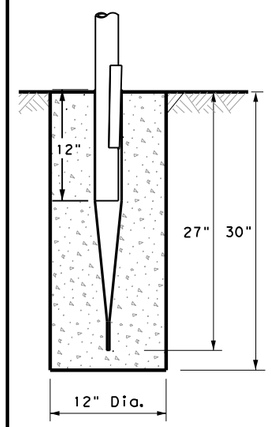

STEEL

WAP

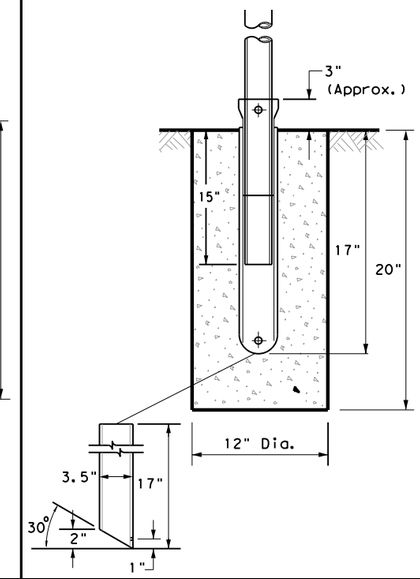

PLASTIC

NOTE

1. Install per manufacturer's recommendations.

TYPE OF BARRIER MOUNTS

GUARD FENCE ATTACHMENT

GF1

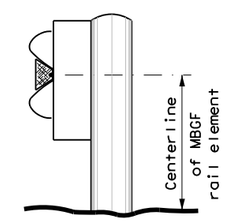

GF2

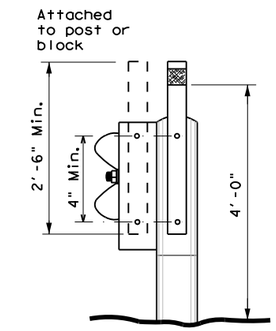

CONCRETE BARRIER / BRIDGE RAIL

CTB

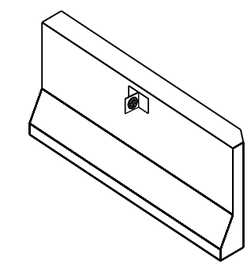

GENERAL NOTES

1. Place delineators on a section of roadway at a consistent distance from the edge of pavement.
2. Where a restriction prevents consistent placement from the pavement edge, place the affected object markers in line with the innermost edge of the obstruction.
3. When Type 2 object markers and delineators are more than 8'-0" from the edge of the pavement, it may not be possible to maintain a height of approximately 4'-0". If this is the case, place the object marker or delineator as close to the desired height as possible.
4. Install all delineators, object markers and barrier reflectors in accordance with the manufacturer's recommendation.
5. Barrier reflectors should be installed a minimum of 18 inches above the edge of the pavement surface.

TYPES 1, 3, AND 4 OBJECT MARKERS AND CHEVRONS

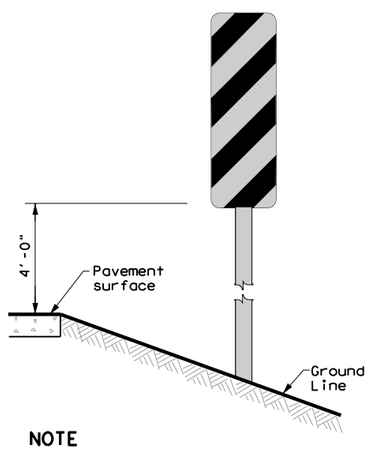

NOTE

Mounting at 4 feet to the bottom of the chevron is permitted for chevrons that will not exceed a height of 6'-6" to the top of the chevron (sizes 24" x 30" and smaller)

CHEVRONS AND ONE DIRECTION LARGE ARROW SIGN

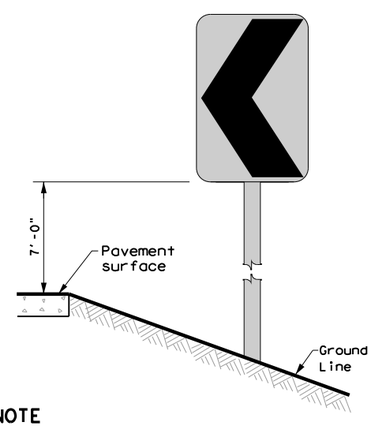

NOTE

Chevrons 30" x 36" and larger shall be mounted at a height of 7' to the bottom of the chevron. Chevron sign and ONE DIRECTIONAL LARGE ARROW sign (W1-9T) shall be installed per SMD standard sheets and paid under item 644.

DELINEATORS AND TYPE 2 OBJECT MARKERS

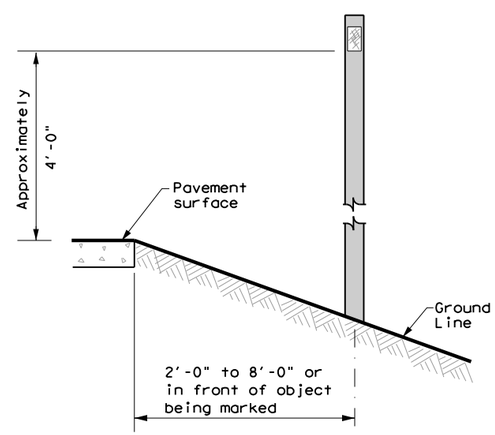

See general notes 1, 2 and 3.

Texas Department of Transportation

Traffic Operations Division Standard

DELINEATOR & OBJECT MARKER INSTALLATION

D & OM(2)-15

FILE: dom2-15.dgn	DN: TXDOT	CK: TXDOT	DW: TXDOT	CK: TXDOT
© TxDOT August 2004	CONT	SECT	JOB	HIGHWAY
REVISIONS				
10-09 3-15	DIST		COUNTY	SHEET NO.
4-10				92 OF 152

20B

DISCLAIMER:
The use of this standard is governed by the "Texas Engineering Practice Act". No warranty of any kind is made by TxDOT for any purpose whatsoever. TxDOT assumes no responsibility for the conversion of this standard to other formats or for incorrect results or damages resulting from its use.

DATE:
FILE:

DISCLAIMER:
The use of this standard is governed by the "Texas Engineering Practice Act". No warranty of any kind is made by TxDOT for any purpose whatsoever. TxDOT assumes no responsibility for the conversion of this standard to other formats or for incorrect results or damages resulting from its use.

USE OF WARNING DEVICES AT CURVES WITH ADVISORY SPEED LIMITS

Amount by which Advisory Speed Is less than Posted Speed	Warning Devices Needed
5 MPH & 10 MPH	RPMs
15 MPH & 20 MPH	RPMs, and Delineators or RPMs and ONE DIRECTION LARGE ARROW (W1-6) or (W1-9T) sign
25 MPH & Greater	RPMs and Chevrons

SUGGESTED SPACING FOR DELINEATORS ON HORIZONTAL CURVES

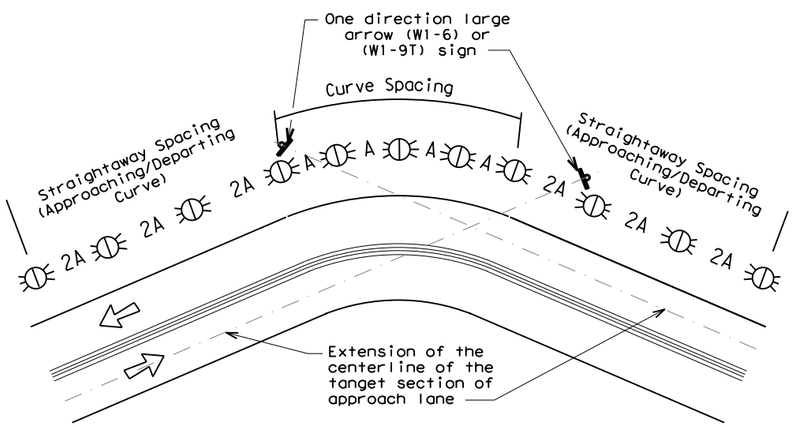

Curves less than 1 degree do not normally require delineators.

NOTE

ONE DIRECTIONAL LARGE ARROW (W1-6) or(W1-9T) sign should be located at approximately and perpendicular to the extension of the centerline of the tangent section of approach lane.

SUGGESTED SPACING FOR CHEVRONS ON HORIZONTAL CURVES

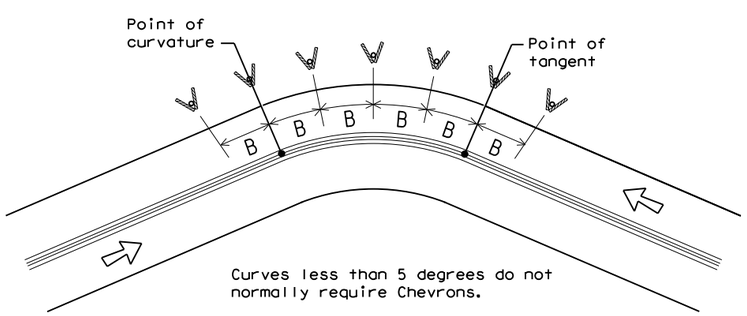

Curves less than 5 degrees do not normally require Chevrons.

DELINEATOR AND CHEVRON SPACING

WHEN DEGREE OF CURVE OR RADIUS IS KNOWN

Degree of Curve	FEET			
	Radius of Curve	Spacing in Curve	Spacing in Straightaway	Chevron Spacing in Curve
		A	2A	B
1	5730	225	450	—
2	2865	160	320	—
3	1910	130	260	200
4	1433	110	220	160
5	1146	100	200	160
6	955	90	180	160
7	819	85	170	160
8	716	75	150	160
9	637	75	150	120
10	573	70	140	120
11	521	65	130	120
12	478	60	120	120
13	441	60	120	120
14	409	55	110	80
15	382	55	110	80
16	358	55	110	80
19	302	50	100	80
23	249	40	80	80
29	198	35	70	40
38	151	30	60	40
57	101	20	40	40

Curve delineator approach and departure spacing should include 3 delineators spaced at 2A. This spacing should be used during design preparation or when the degree of curve is known.

DELINEATOR AND CHEVRON SPACING

WHEN DEGREE OF CURVE OR RADIUS IS NOT KNOWN

Advisory Speed (MPH)	Spacing in Curve	Spacing in Straightaway	Chevron Spacing in Curve
	A	2xA	B
65	130	260	200
60	110	220	160
55	100	200	160
50	85	170	160
45	75	150	120
40	70	140	120
35	60	120	120
30	55	110	80
25	50	100	80
20	40	80	80
15	35	70	40

If the degree of curve is not known, delineator spacing may be determined based on the Advisory Speed of the curve. Use the delineator curve spacing for each Advisory Speed (MPH).

DELINEATOR AND OBJECT MARKER APPLICATION AND SPACING

CONDITION	REQUIRED TREATMENT	MINIMUM SPACING
Frwy./Exp. Tangent	RPMs	See PM-series and FPM-series standard sheets
Frwy./Exp. Curve[1]	Single delineators on right side	See delineator spacing table
FRWY/EXP. Ramp	Single delineators on at least one side of ramp (should be on outside of curves) (see Detail 4 on D&OM(4))	100 feet on ramp tangents. Use delineator spacing table for ramp curves ("straightway spacing" does not apply to ramp curves).
Acceleration/Deceleration Lane	Double delineators (see Detail 4 on D&OM(4))	100 feet (See Detail 4 on D & OM (4))
Truck Escape Ramp	Single red delineators on both sides	50 feet
Bridge Rail (steel or concrete)and Metal Beam Guard Fence or CTB	Bi-Directional Delineators when undivided with one lane each direction Single Delineators when multiple lanes each direction	Equal spacing (100'max) but not less than 3 delineators
Guard Rail Terminus/Impact Head	Divided highway - Object marker on approach end. Undivided 2-lane highways - Object marker on approach and departure end.	Requires Type 3 Object Marker or reflective sheeting provided by manufacturer per D & OM(VIA).
Bridges with no Approach Rail	Type 3 Object Marker at end of rail and 3 single delineators approaching rail.	See Detail 2 on D & OM(4)
Reduced Width Approaches to Bridge Rail	Type 2 Object Markers and 3 single delineators approaching bridge.	See Detail 1 on D & OM(4)
Culverts without MBGF	Type 2 Object Markers	See Detail 3 on D & OM(4)
Crossovers	Double yellow delineators or RPM's	See Detail 5 on D & OM (4)
Pavement Narrowing (lane merge) on Freeways/Expressway	Single delineators adjacent to affected lane for full length of transition	100 feet

NOTES

1. Delineators not required in urban areas with continuous illumination.
2. Unless indicated otherwise, the delineator or barrier reflector color shall conform to the color of the pavement edge line on the side of the road where the delineators or barrier reflectors are placed.
3. Barrier reflectors may be used to replace required delineators.
4. Single red delineators may be mounted on the back side of delineator posts for wrong way driver applications

LEGEND

	Bi-directional Delineator
	Delineator
	Sign

Texas Department of Transportation

Traffic Operations Division Standard

DELINEATOR & OBJECT MARKER PLACEMENT DETAILS

D & OM(3)-15B

FILE: dom3-15b.dgn	DN: TXDOT	CK: TXDOT	DW: TXDOT	CK: TXDOT
© TxDOT August 2004	CONT	SECT	JOB	HIGHWAY
REVISIONS				
3-15	DIST		COUNTY	SHEET NO.
8-15				93 OF 152

20C

DATE:
FILE:

DISCLAIMER:
The use of this standard is governed by the "Texas Engineering Practice Act". No warranty of any kind is made by TxDOT for any purpose whatsoever. TxDOT assumes no responsibility for the conversion of this standard to other formats or for incorrect results or damages resulting from its use.

TWO-WAY, TWO LANE ROADWAY WITH REDUCED WIDTH APPROACH

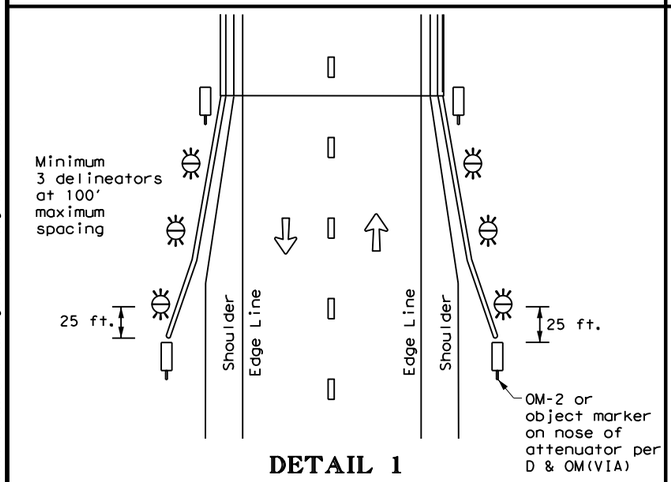

DETAIL 1

TWO-WAY, TWO LANE ROADWAY BRIDGE WITH NO APPROACH RAIL

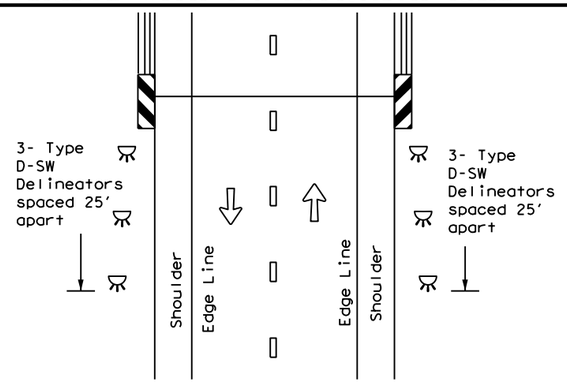

DETAIL 2

FOR CULVERTS WITHOUT MBGF

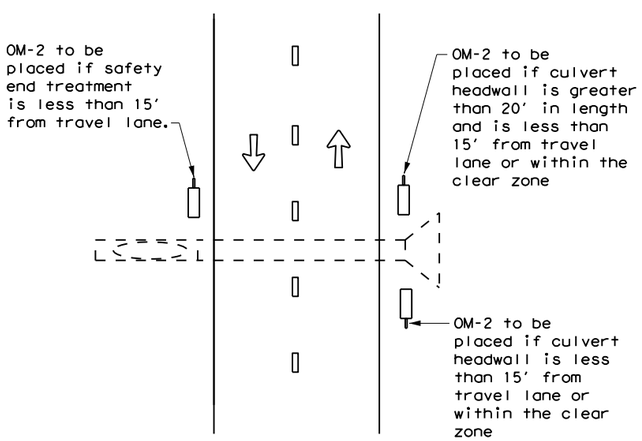

DETAIL 3

FREEWAY DELINEATION FOR RAMPS AND ACCELERATION/DECELERATION LANES

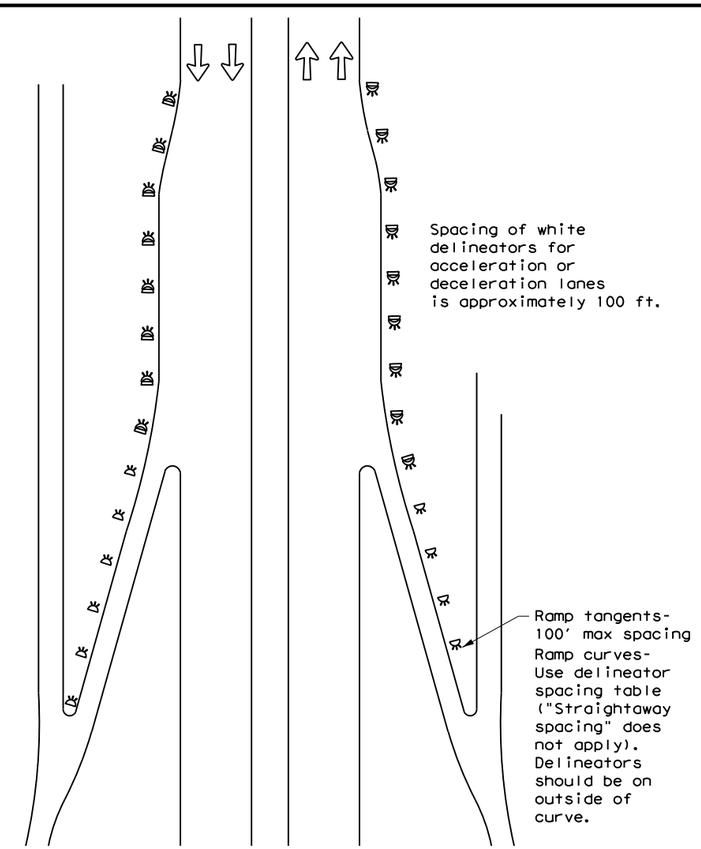

DETAIL 4

CROSSOVERS

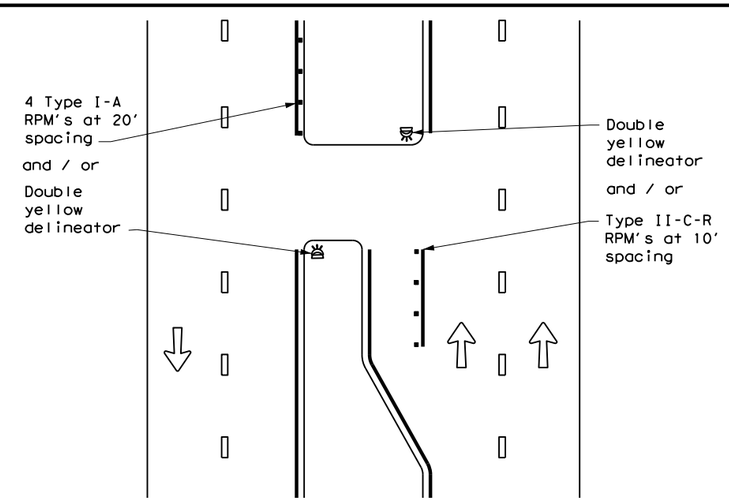

DETAIL 5

TYPICAL APPLICATION OF DEAD END BARRICADE

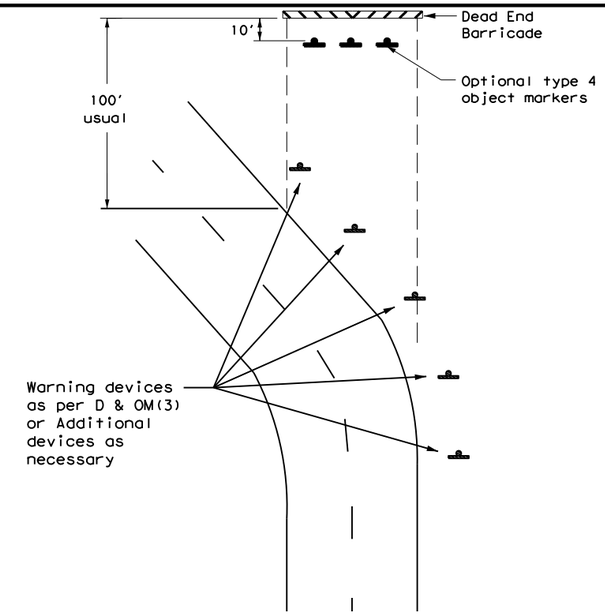

DETAIL 6

TYPICAL DEAD END BARRICADE INSTALLATION

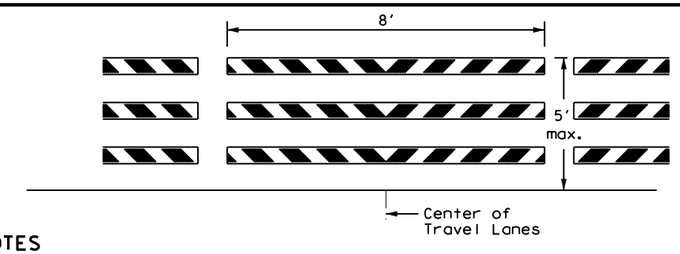

NOTES

1. Barricade striping shall be red and white reflective sheeting for all permanent road closures.
2. Barricade striping is red and white sloping toward the center of the roadway.
3. Type 3 Barricade Supports should be anchored to soil or pavement as described in compliant Work Zone Traffic Control Devices List, section D.2.f and D.2.g.

DETAIL 7

LEGEND	
	Bidirectional Delineator
	Delineator
	OM-3
	Barricade
	Sign
	OM-2
	Double Delineator

Texas Department of Transportation

Traffic Operations Division Standard

DELINEATOR & OBJECT MARKER PLACEMENT DETAILS

D & OM(4)-15

FILE: dom4-15.dgn	DN: TXDOT	CK: TXDOT	DW: TXDOT	CK: TXDOT
© TxDOT August 2004	CONT	SECT	JOB	HIGHWAY
REVISIONS 3-15	DIST		COUNTY	SHEET NO. 94 OF 152

20D

DATE:
FILE:

TWO-WAY, TWO LANE ROADWAY WITH REDUCED WIDTH APPROACH RAIL

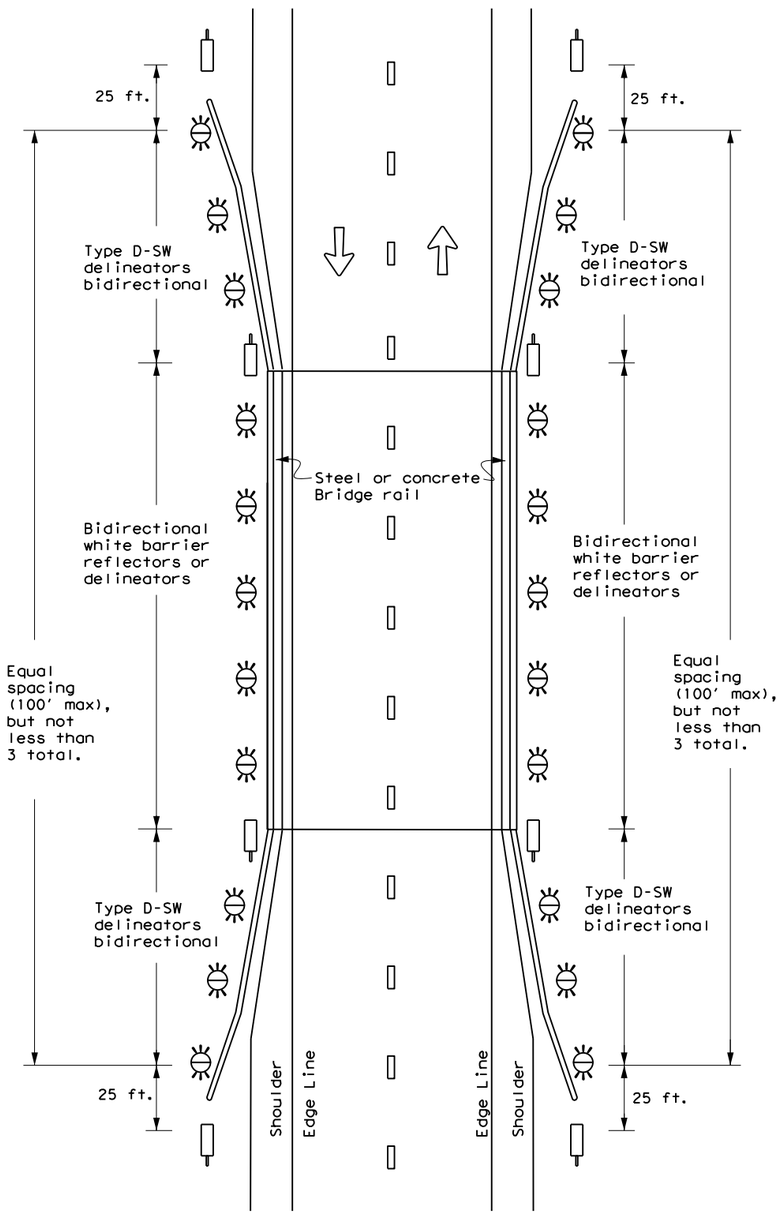

TWO-WAY, TWO LANE ROADWAY WITH METAL BEAM GUARD FENCE (MBGF)

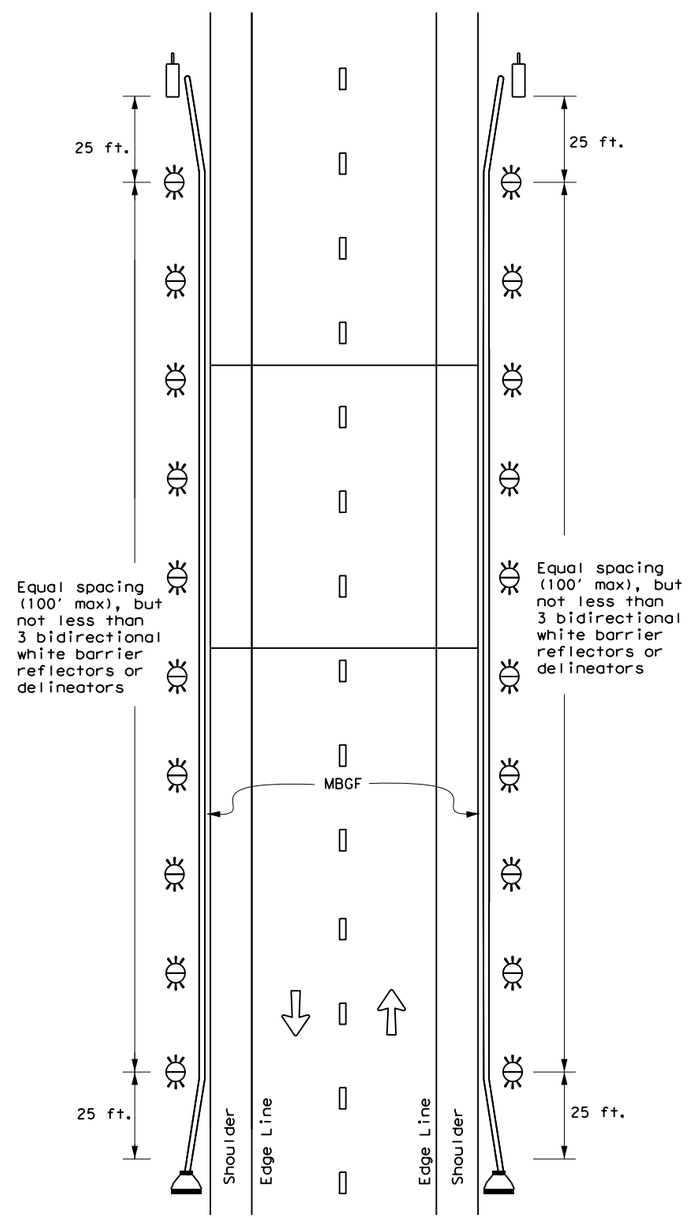

NOTE:

If terminal ends include an object marker, there is no need to install an OM-2 in front of terminal.

TWO-WAY, TWO LANE ROADWAY BRIDGE WITH NO APPROACH RAIL

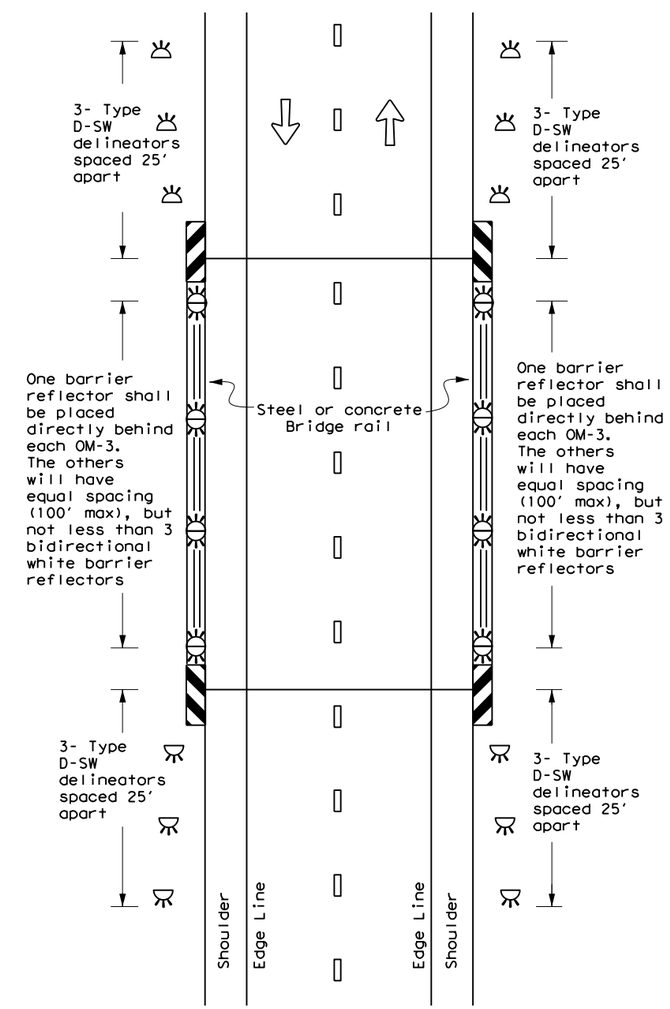

LEGEND

	Bidirectional Delineator
	Delineator
	OM-3
	OM-2
	Terminal End
	TRAFFIC FLOW

Texas Department of Transportation

Traffic Operations Division Standard

DELINEATOR & OBJECT MARKER PLACEMENT DETAILS

D & OM(5)-15

FILE: dom5-15.dgn	DN: TxDOT	CK: TxDOT	DW: TxDOT	CK: TxDOT
© TxDOT August 2015	CONT	SECT	JOB	HIGHWAY
REVISIONS				
	DIST	COUNTY		SHEET NO.
				95 OF 152

20E

DISCLAIMER:
The use of this standard is governed by the "Texas Engineering Practice Act". No warranty of any kind is made by TxDOT for any purpose whatsoever. TxDOT assumes no responsibility for the conversion of this standard to other formats or for incorrect results or damages resulting from its use.

DATE:
FILE:

DISCLAIMER:
The use of this standard is governed by the "Texas Engineering Practice Act". No warranty of any kind is made by TxDOT for any purpose whatsoever. TxDOT assumes no responsibility for the conversion of this standard to other formats or for incorrect results or damages resulting from its use.

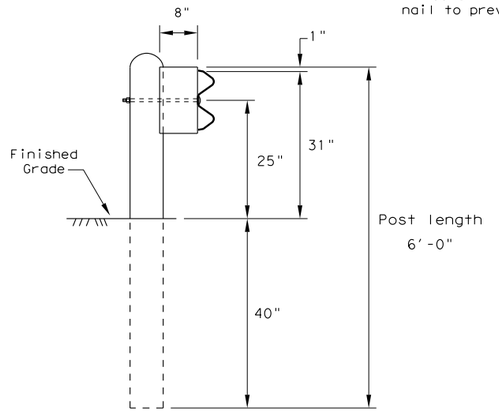

Standard Line Post Installation

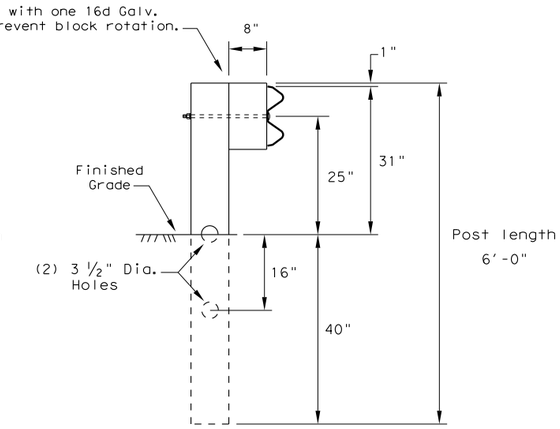

Rectangular CRT Post (6"x 8" x 6' Long)

(6) CRT required.
See Elevation Detail for locations.

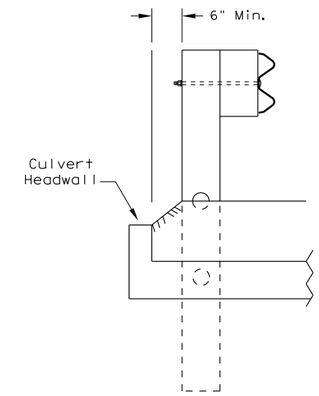

Lateral Offset Between the Guardrail and the Culvert Headwall

GENERAL NOTES

1. The type of line post (round wood post, rectangular wood post, or steel post) will be as shown in the plans. The exact position of the transitions shall be as shown in the plans or as directed by the Engineer. Steel posts to be galvanized in accordance with Item 445, "Galvanizing."
2. Rail element shall meet all requirements of Item 540, "Metal Beam Guard Fence" except as modified on the plans. The Contractor may furnish rail elements of 12 ½ or 25 foot nominal lengths.
3. Rail post holes are offset 3'- 1 ½" from standard guardrail to accommodate the midspan splicing.
4. Button head post bolts (ASTM A307) shall be of sufficient length to extend through the full thickness of the nut (ASTM A563) and no more than ¾" beyond it. Button head splice bolts (ASTM A307) are ⅝" x 1 ¼" with a ⅝" double recessed nut (ASTM A563). Galvanized fittings (bolts, nuts, and washers) shall be in accordance with Item, "Metal For Structures". Fittings shall be subsidiary to the bid item requiring construction of transition.
5. Where solid rock is encountered or where shown on the plans, the diameter of the holes shall be approximantley 12 inches, the backfilling shall be with a cohesionless material, and embedment depth shall be 1' - 6" or more as directed by the Engineer.
6. Posts shall not be set in concrete, of any depth.
7. Refer to GF(31) Standard Sheet for additional details.

NOTE: Field drilled holes shall be repaired in accordance with Item 445, "Galvanizing". Flame cutting of holes in guardrail shall not be permitted.

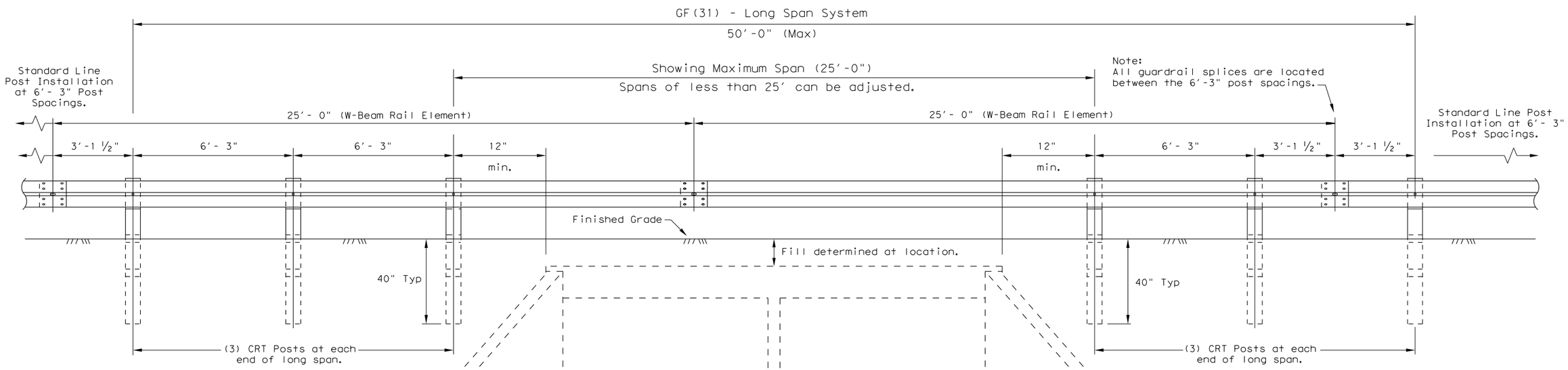

ELEVATION DETAIL
Long Span Guardrail

Texas Department of Transportation

Design Division Standard

METAL BEAM GUARD FENCE
(Long Span)

GF(31)LS-14

FILE: gf31ls14.dgn	DN: TxDOT	CK: AM	DW: VP	CK: CGL
© TxDOT: December 2011	CONT	SECT	JOB	HIGHWAY
REVISIONS				
	DIST	COUNTY		SHEET NO.
				96 OF 152

DATE:
FILE:

DISCLAIMER:
The use of this standard is governed by the "Texas Engineering Practice Act". No warranty of any kind is made by TxDOT for any purpose whatsoever. TxDOT assumes no responsibility for the conversion of this standard to other formats or for incorrect results or damages resulting from its use.

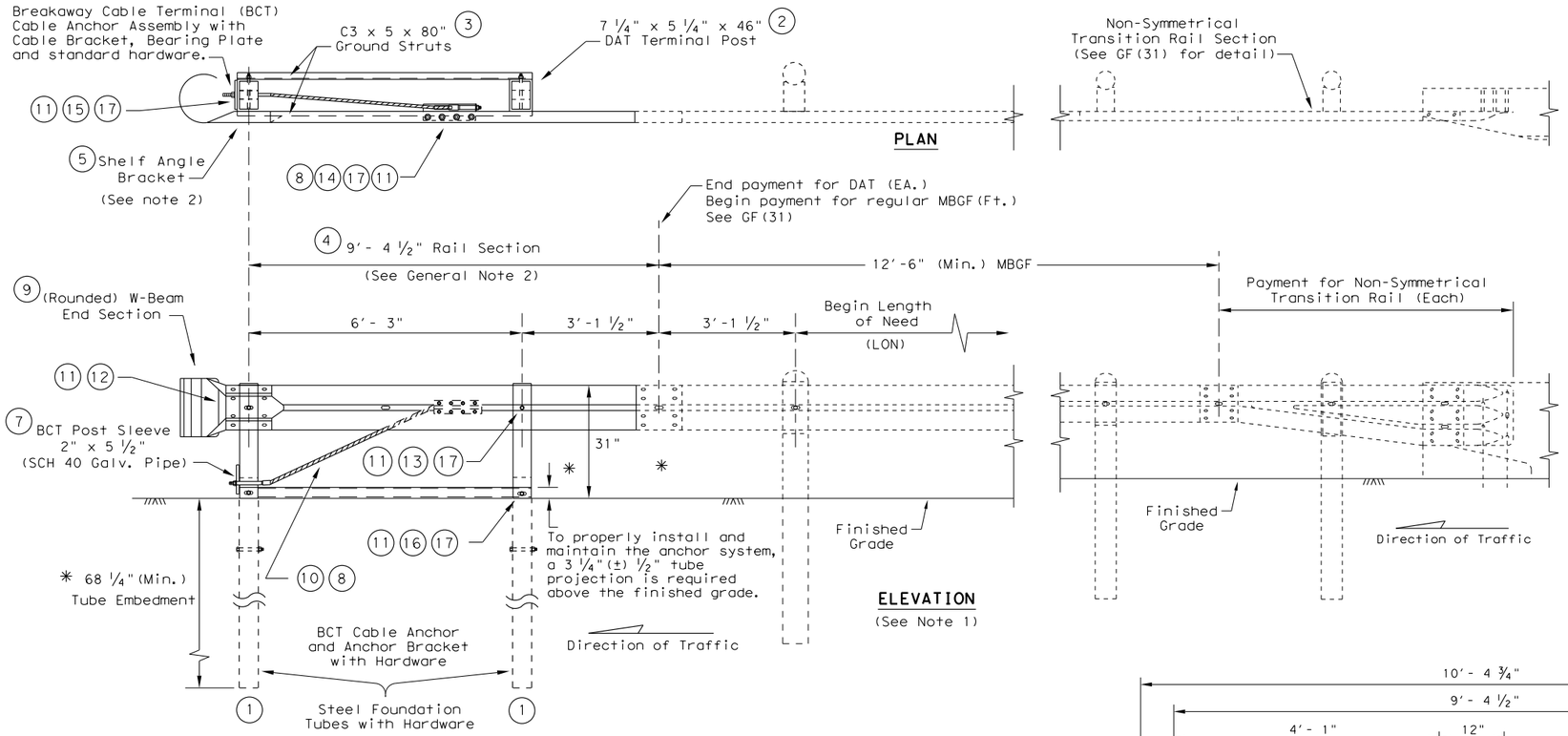

DOWNSTREAM ANCHOR TERMINAL (DAT)

Only for downstream use, when located outside the horizontal clearance area of opposing traffic.

GENERAL NOTES

1. The detail shown is the minimum Length of Need (LON) for a DAT connected to a concrete rail.
2. The rail section at the end post is supported by the Shelf Angle Bracket. The rail element is not attached to the end post.
3. The foundation tubes shall not project more than 3 ¾" above the finished grade.
4. All hardware for DAT shall be ASTM A307 unless otherwise shown.
5. Refer to GF(31) sheet for terminal connection details.

MOW STRIP INSTALLATION

If a mow strip is required with the DAT installation the leave-out area around the steel foundation tubes and the two channel struts may be omitted. This will require a full pour at the foundation tubes.

#	(DAT) PARTS LIST	QTY
1	Steel Foundation Tube	2
2	DAT Terminal Post	2
3	Channel Strut	2
4	Terminal Rail Element	1
5	Shelf Angle Bracket	1
6	BCT Bearing Plate	1
7	BCT Post Sleeve	1
8	Guardrail Anchor Bracket	1
9	(Rounded) W-Beam End Section	1
10	BCT Cable Anchor	1
11	Recessed Nut, Guardrail	20
12	1 ¼" Button Head Bolt	4
13	10" Button Head Bolt	2
14	⅝" x 2" Hex Head Bolt	8
15	⅝" x 8" Hex Head Bolt	4
16	⅝" x 10" Hex Head Bolt	2
17	⅝" Flat Washer	18

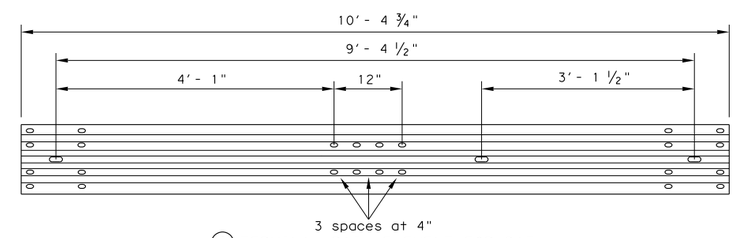

(4) TERMINAL RAIL ELEMENT FOR DAT

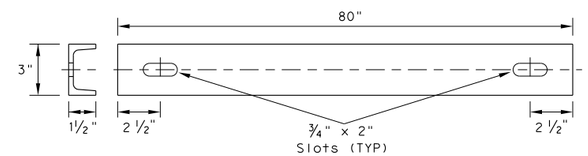

(3) CHANNEL STRUT

C3 x 5 x 80", Grade A36

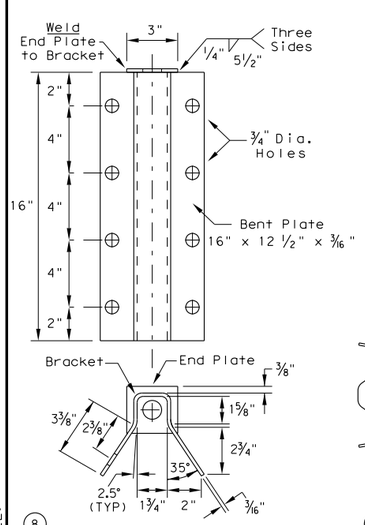

(8) GUARDRAIL ANCHOR BRACKET

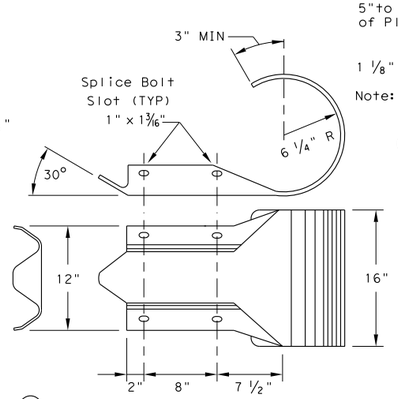

(9) W-BEAM END SECTION (ROUNDED) (12 GA.)

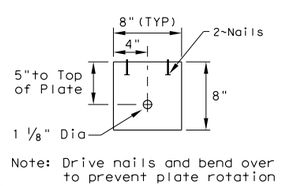

Note: Drive nails and bend over to prevent plate rotation

(6) BEARING PLATE

8"x 8"x ⅝" PL

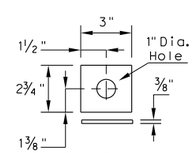

End Plate

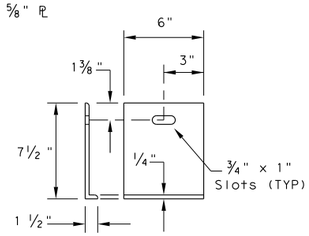

(5) SHELF ANGLE BRACKET

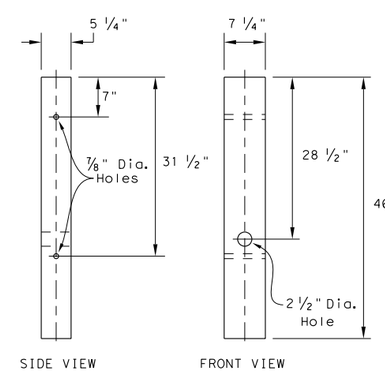

(2) TERMINAL POST

7 ¼"x 5 ¼"x 46" Wood Post

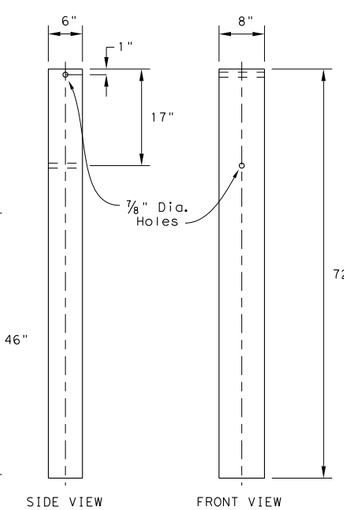

(1) STEEL FOUNDATION TUBE

6"x 8"x ⅛" x 72" Steel Tube

Texas Department of Transportation — Design Division Standard

METAL BEAM GUARD FENCE (Downstream Anchor Terminal)

GF(31)DAT-14

FILE: gf31dt14.dgn	DN: TxDOT	CK: AM	DW: VP	CK: CGL
©TxDOT: December 2011	CONT	SECT	JOB	HIGHWAY
REVISIONS				
	DIST	COUNTY		SHEET NO.
				97 OF 152

DATE:
FILE:

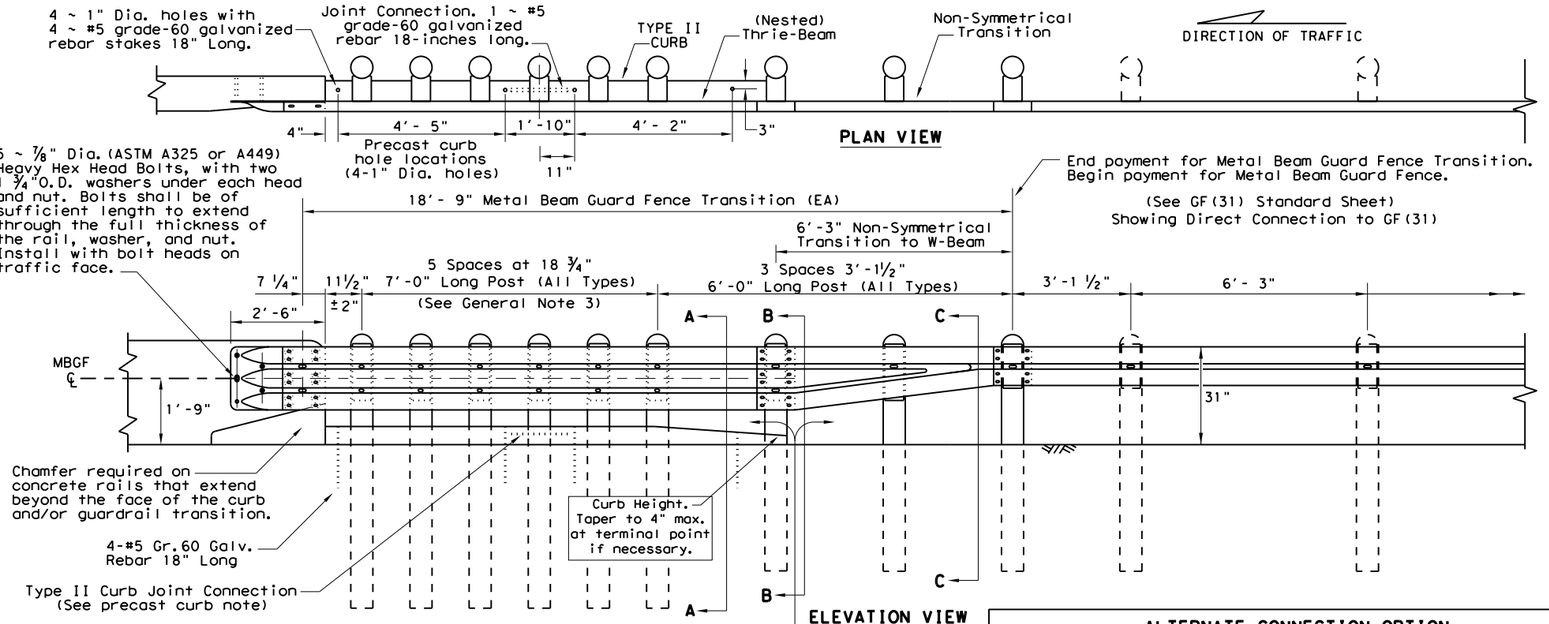

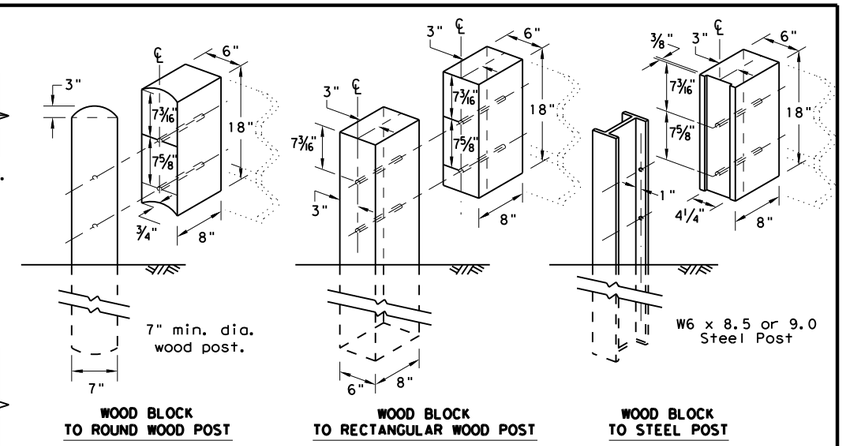

GENERAL NOTES

1. Concrete curb may be cast-in-place or precast as shown on this sheet. When used in conjunction with thrie-beam guard fence transitions, curb shall be Type II (Typically 5-3/4" height above surface; See CCCG standard sheet) unless otherwise shown in the plans. If other curb heights are shown in the plans in conjunction with the transition, the curb height may be from 4" to 8" with a relatively vertical face. Concrete curb shall be continuous to the seventh post.

   Contact the Design Division for drainage cut out options needed within the curb section of the transition.

2. The type of post (round wood post, rectangular wood post or steel post) will be as shown in the plans.

3. The post length shall be marked on all 7' - 0" long posts by the Manufacturer. The mark shall be located within the top 1 ft. region of the post, at least 5/8" in height, and visible after installation. Wooden posts shall be marked with a brand, and steel posts with a stencil before galvanizing.

4. Rail element shall meet the requirements of Item 540, "Metal Beam Guard Fence" except as modified on the plans. The thrie-beam terminal connector and the thrie-beam transition to w-beam shall be of the same material, but shall not be less than 10 gauge.

   Contractor shall verify that the locations of bolt holes match those in the thrie-beam terminal connector prior to ordering materials.

5. Unless otherwise shown in the plans, transitions shall be placed with the block face in front of or directly above the curb face.

6. Galvanized washers used with the 5/8" dia. post bolts shall be Type A 1-3/4" O.D. washers. The (12) plate washers (FWR03) required at the terminal connector splice.

7. Button head "post" bolts (ASTM A307) shall be of sufficient length to extend through the full thickness of the nut (ASTM A563) and washer and not more than 1" beyond it. Button head "splice" bolts (ASTM A307) 5/8" dia. x 2" (at triple rail splices) with 5/8" double recessed nuts.

8. Fittings (bolts, nuts, and washers) shall be galvanized in accordance with Item 445, "Galvanizing". Fittings shall be subsidiary to the bid item.

9. Crown shall be widened to accommodate transitions.

10. If solid rock is encountered. See the MBGF standard sheet for the proper installation guidance.

11. Posts shall not be set in concrete.

12. Unless otherwise shown in the plans, a composite material (post or block) that meets the requirements of DMS-7210, "Composite Material Posts and Blocks for Metal Beam Guard Fence" may be substituted for (post or block) of similar dimensions. TxDOT's Construction Division maintains a Material Producer List (MPL) for producers of materials conforming to DMS-7210. Only producers on the MPL can furnish composite material posts and/or blocks.

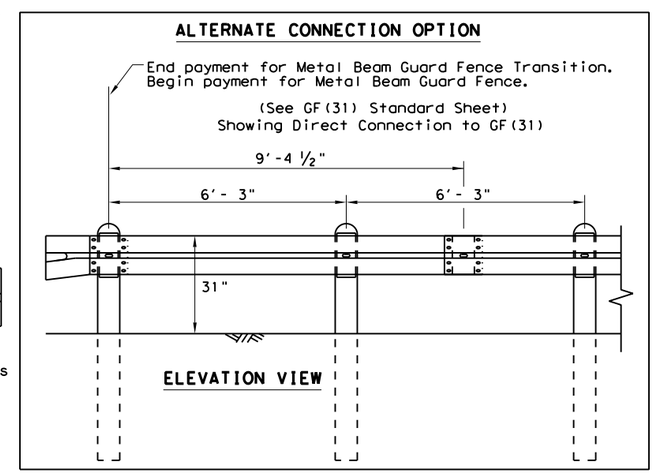

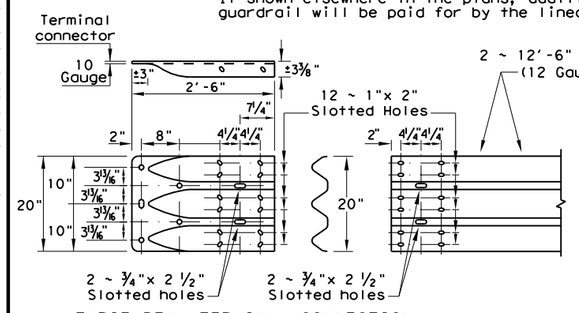

THRIE-BEAM TERMINAL CONNECTION
(See General Notes 6 & 7 for required hardware)

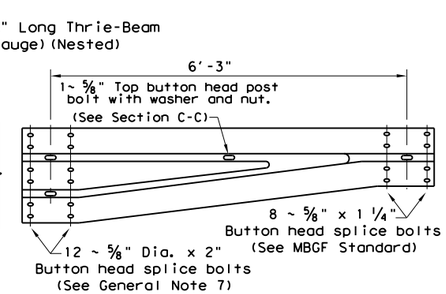

NON-SYMMETRICAL TRANSITION TO W-BEAM (10 Gauge)

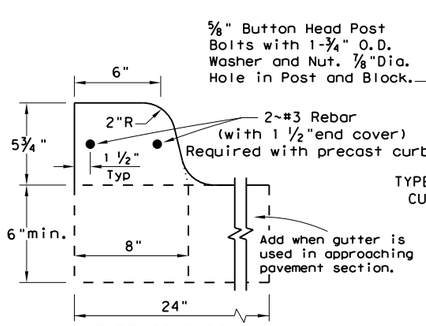

TYPE II CURB
Cast-in-Place or Precast

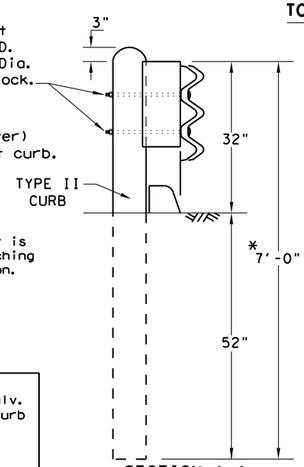

SECTION A-A

*Note: (All post types) (See General Note 3)

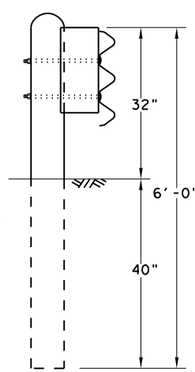

SECTION B-B

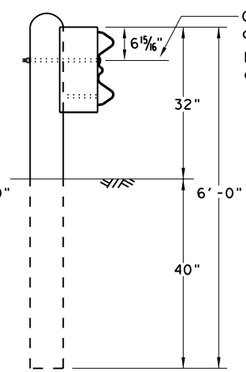

SECTION C-C

Only top post bolt required at this post location.

Bottom bolt requires field drilling and is optional.

TRANSITION SECTIONS

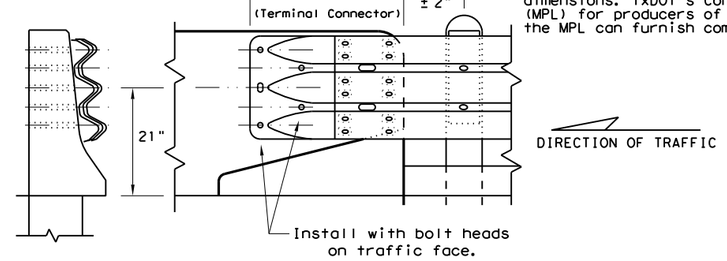

CONNECTION TO CONCRETE BRIDGE RAIL AND TRAFFIC BARRIERS

(12) Galvanized rectangular washers (FWR03) are required under the recessed nut at the terminal connector splice to nested thrie-beam. (See General Notes 6 & 7).

PRECAST CURB:
Type II Precast Curb secured with 4~#5 Gr.60 Galv. Rebar stakes 18" long. The 12' - 2" section of curb may be cast in two sections.
Section ① 5' - 8" long
Section ② 6' - 6" long with the last 3' - 6" of curb tapered to a 4" height.
The Joint Connection is two 9" long 1" Dia. female ends connected with 1~#5 Gr.60 Galv. Rebar 18" long.

Texas Department of Transportation — Design Division Standard

METAL BEAM GUARD FENCE TRANSITION
(Thrie-Beam Transition)
GF(31)TR-14

FILE: gf31tr14.dgn	DN: TxDOT	CK: AM	DW: VP	CK: CGL
© TxDOT: December 2011	CONT	SECT	JOB	HIGHWAY
REVISIONS				
	DIST		COUNTY	SHEET NO.
				98 OF 152

DISCLAIMER:
The use of this standard is governed by the "Texas Engineering Practice Act". No warranty of any kind is made by TxDOT for any purpose whatsoever. TxDOT assumes no responsibility for the conversion of this standard to other formats or for incorrect results or damages resulting from its use.

DATE:
FILE:

DISCLAIMER:
The use of this standard is governed by the "Texas Engineering Practice Act". No warranty of any kind is made by TxDOT for any purpose whatsoever. TxDOT assumes no responsibility for the conversion of this standard to other formats or for incorrect results or damages resulting from its use.

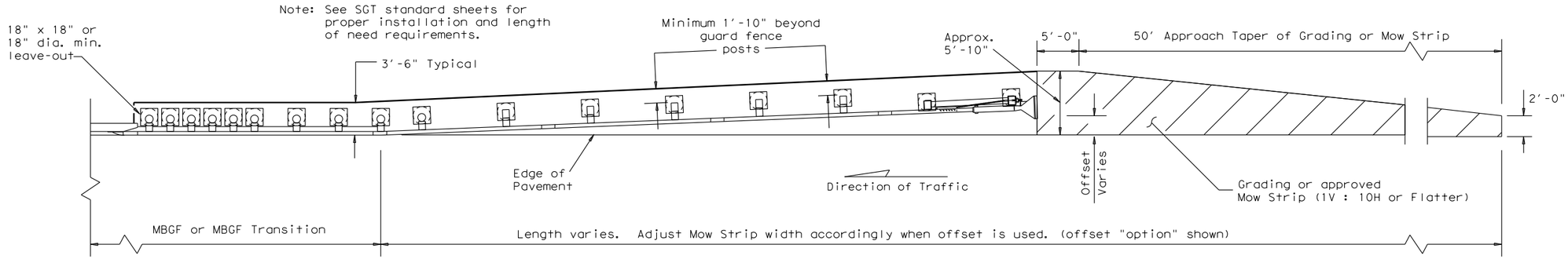

GRADING AND MOW STRIP AT GUARDRAIL END TREATMENTS

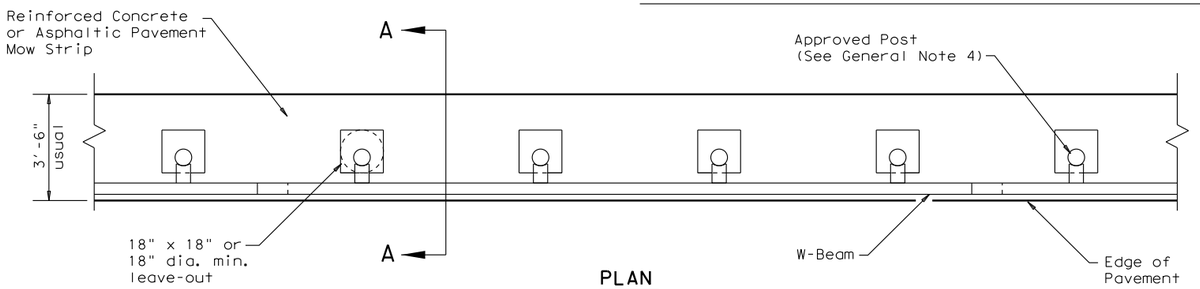

PLAN

GF(31) shown with Mow Strip (See GF(31) standard sheet for proper installation)

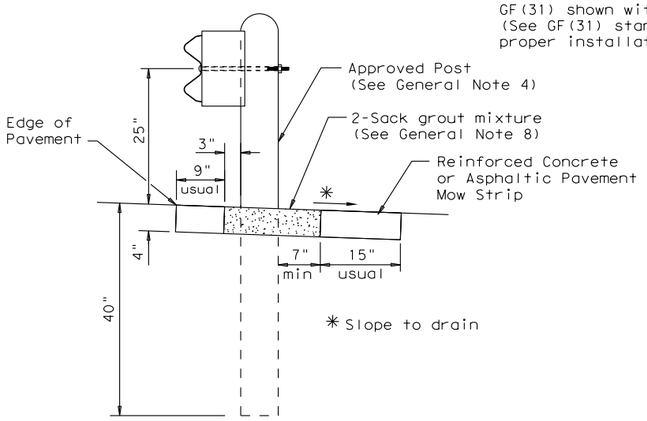

SECTION A-A

Typical

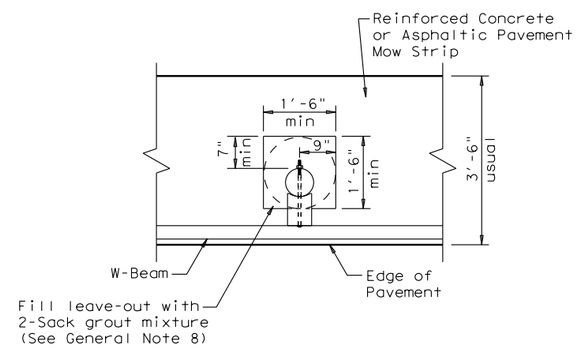

MOW STRIP DETAIL

Reinforced Concrete or Asphaltic Pavement Mow Strip with 18" x 18" or 18" dia. minimum leave-out.

Note: Site Condition(s)

Site conditions may exist where grading is required for the proper installation of metal guard fence and end treatments.

Approach grading or mow strip may be decreased or eliminated, as directed by the Engineer.

GENERAL NOTES

1. This mow strip design is for use with metal beam guard fence, guard fence transitions, and guard fence end treatments (See SGT standards for proper SGT installation).
2. Mow strips shall be asphaltic pavement or reinforced concrete (wire mesh or synthetic fiber), as shown on the plans and will be paid for under the pertinent bid item. Asphaltic pavement shall meet the requirements of the item, and be placed in accordance with the pertinent bid item as shown in the plans. Reinforced concrete shall be placed in accordance with Item 432, "Riprap." The use of the synthetic fiber in lieu of steel reinforcing is acceptable, provided the fiber producer is on the Department Material Producer List (MPL), maintained by TxDOT, Construction Division.
3. The leave-out behind the post shall be a minimum of 7".
4. The type of approved post will be as shown in the plans. See the applicable standard sheets for additional details and information.
5. Other curb placement options may be used. Curbs are not considered part of the mow strip and will be paid for under other pertinent bid item.
6. Thickness of the mow strip will be 4".
7. The limits of payment for asphaltic pavement or reinforced concrete will include leave-outs for the posts.
8. The leave-outs shall be filled with no more than a 2-sack grout mixture and placed in accordance with Section 421.2.F, "Mortar and Grout." Payment for furnishing and placing the grout mixture will be subsidiary to the pay item of asphaltic pavement or reinforced concrete.

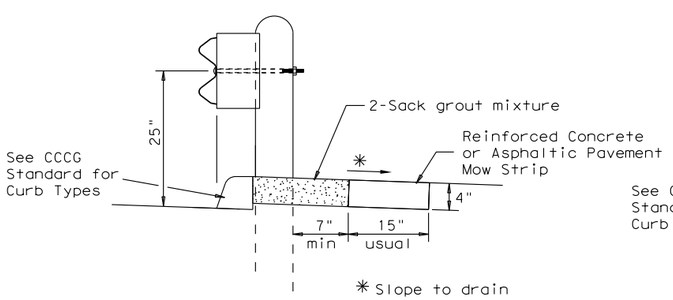

CURB OPTION (1)

This option will increase the post embedment through out the system.

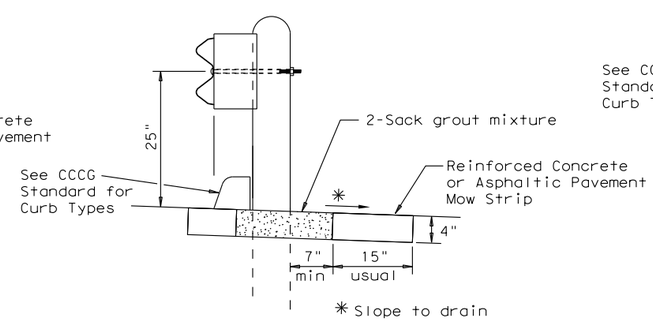

CURB OPTION (2)

Curb shown on top of mow strip

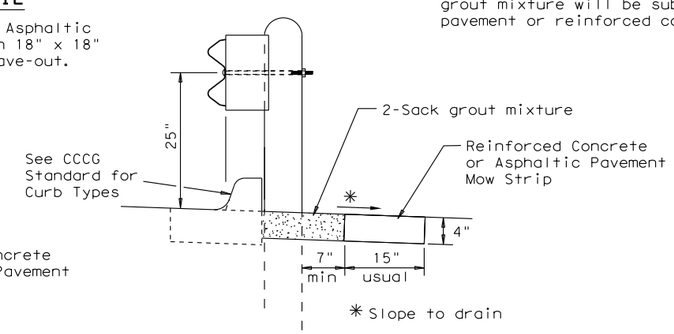

CURB OPTION (3)

Texas Department of Transportation — Design Division Standard

METAL BEAM GUARD FENCE (MOW STRIP)

GF(31)MS-11

FILE: gf31ms11.dgn	DN: TxDOT	CK: AM	DW: BD	CK:
© TxDOT December 2011	CONT	SECT	JOB	HIGHWAY
REVISIONS				
	DIST	COUNTY		SHEET NO.
				99 OF 152

DATE:
FILE:

DISCLAIMER:
The use of this standard is governed by the "Texas Engineering Practice Act". No warranty of any kind is made by TxDOT for any purpose whatsoever. TxDOT assumes no responsibility for the conversion of this standard to other formats or for incorrect results or damages resulting from its use.

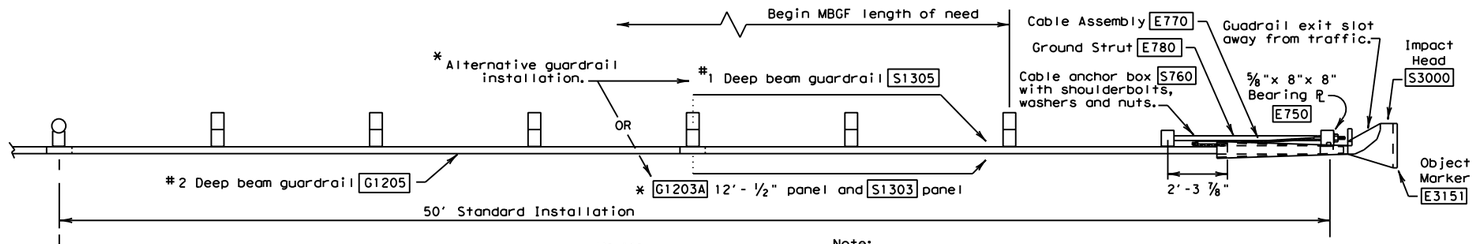

PLAN

End payment for SGT installation(EA) begin payment for standard metal beam guard fence (MBGF) (LF)

Note:
Do not attach rail to post (1).
This applies to this "wood" post design.

TRAFFIC

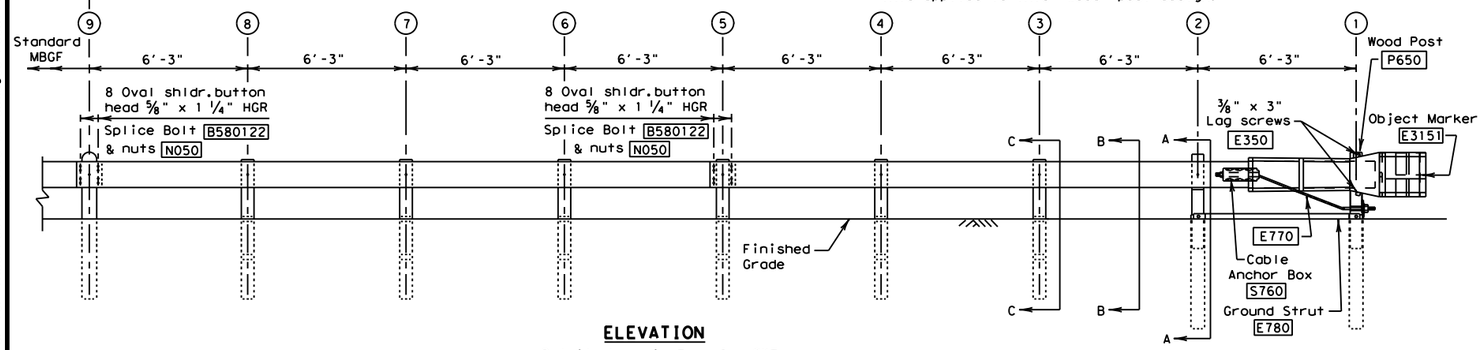

ELEVATION

Detail shown is Type I - SKT

GENERAL NOTES

1. For additional information contact: Interstate Steel Inc. (432) 263-3725
2. The Type of SGT unit will be specified elsewhere in the plans. The numbers in the circles indicate post position. The Type of SGT unit chosen is a maintenance consideration and does not affect the systems performance.

Post & Tube Options		Post Only
Type I	Posts (1) thru (2)	Posts (3) thru (8)
Type II	Posts (1) thru (4)	Posts (5) thru (8)
Type III	Posts (1) thru (8)	None

3. SGT's placed within the "minimum" 150 ft. radius, shall be installed straight. Standard rail elements may be installed within the radius, without special fabrication.
4. All bolts, nuts cable assemblies, cable anchors, steel tubes & bearing plates shall be galvanized.
5. A flare rate of 25:1 may be used over the first 50 ft. of the system to prevent the terminal head from encroaching the shoulder. The flare may be decreased or eliminated for specific installations, if directed by the Engineer.
6. The steel tubes shall not protrude more than 4 inches above ground. Site grading may be necessary to meet this requirement.
7. The steel tubes may be driven with an approved driving head. They shall not be driven with the wood post in the tube. If the steel tubes are placed in drilled holes, the backfill material must be satisfactorily compacted to prevent tube settlement.
8. If solid rock is encountered. See the Manufacturer's installation manual for the proper installation guidance.
9. The breakaway cable assembly must be taut. A locking device, (vice grips or channel lock pliers) should be used to prevent the cable from twisting when tightening the nuts.
10. The wood blocks shall be "toe nailed" to the rectangular wood posts to prevent them from turning when the wood shrinks. The bearing plate on the front post shall also be "toe nailed" to prevent rotation.
11. For curb installations, the soil tubes and posts shall be installed at the proper ground elevation behind the curb. The posts will then require field drilling new holes to accommodate the rail to post connection bolt to maintain the proper height of the rail above the gutter pan. The excess post length above the rail will be removed if directed by the Engineer.
12. An object marker shall be installed on the front of the impact head as detailed on D&OM(VIA).

BILL OF MATERIAL

ITEM #	POST & TUBE OPTIONS Type I	Type II	Type III	DESCRIPTION
S3000	1	1	1	Impact Head
S1305	1	1	1	#1 Deep Beam Guardrail (12 Ga.)
OR G1205	1	1	1	#2 Deep Beam Guardrail (12 Ga.)
S1303	1	1	1	GUARDRAIL (12 GA.) 12'-6" SKT
OR G1203A	1	1	1	GUARDRAIL (12 GA.) 12'-6"
S730	2	2	2	Steel Tube - 6" x 8" x 72" x ⅛" min. or 3/16"
S735	0	2	6	Steel Tube - 6" x 8" x 54" x ⅛" min. or 3/16"
P650	2	4	8	Wood Posts - 5½" x 7½" x 45"
P671	6	4	0	Wood CRT Posts - 6" x 8" x 72"
P675	6	6	6	Wood Block - 6" x 8" x 14"
E740	1	1	1	Pipe Sleeve - 2" Std. Pipe x 5½"
E750	1	1	1	Bearing Plate - ⅝" x 8" x 8"
S760	1	1	1	Cable Anchor Box
E770	1	1	1	Cable Assembly
E780	1	1	1	Ground Strut
HARDWARE				
B580754	2	4	8	⅝" x 7½" Hex Hd. Bolt
B581004	2	4	8	⅝" x 10" Hex Hd. Bolt (Top of Tubes)
W050	11	15	23	⅝" Washers
B581002	1	1	1	⅝" x 10" HGR Post Bolt (Post 2)
B580122	16	16	16	⅝" x 1¼" HGR Splice Bolt
B581802	6	6	6	⅝" x 18" HGR Post Bolt (Posts (3) thru (8))
N050	27	31	39	⅝" HGR Nut (16-Spl, Varies Posts, 2-Strut)
E350	2	2	2	⅜" x 3" Lag Screw
N100	2	2	2	1" Hex Nut (Anchor Cable)
W100	2	2	2	1" Washer (Anchor Cable)
SB12A	8	8	8	Cable Anchor Box Shoulder Bolts
N012A	8	8	8	½" Structural Nut
W012A	8	8	8	½" Structural Washer
E3151	1	1	1	Object Marker - (18" x 18")

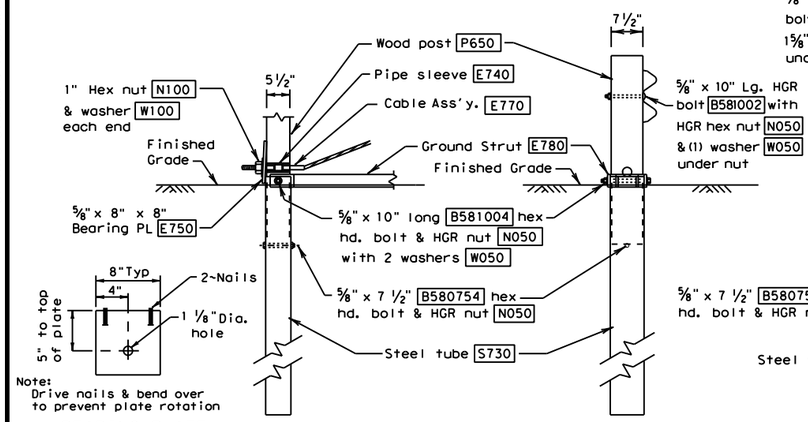

BEARING PLATE

PARTIAL VIEW AT POST #1

SECTION A-A

(at post 2)

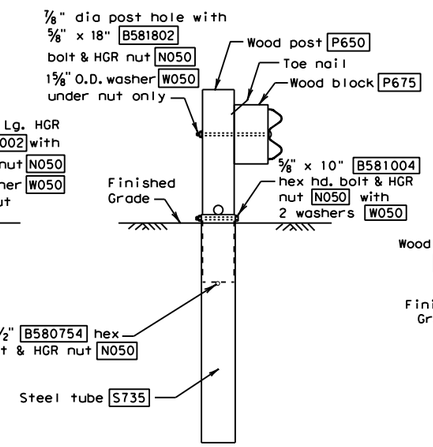

SECTION B-B

Typical Post & Tube System, Posts 3 & 4 with (Type II) & Posts 3 Thru 8 with (Type III)

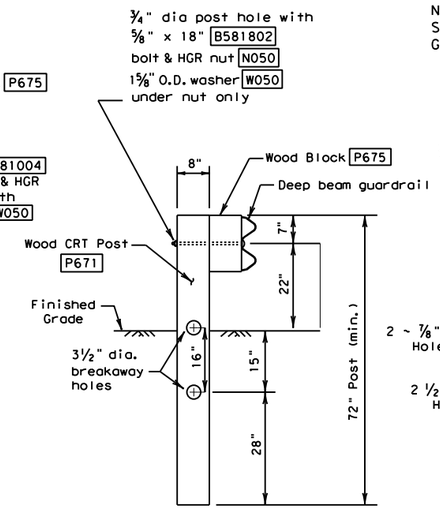

SECTION C-C

Typ. at Posts 3 Thru 8 with (Type I)

Note.
See Alternative Guardrail Installation. *

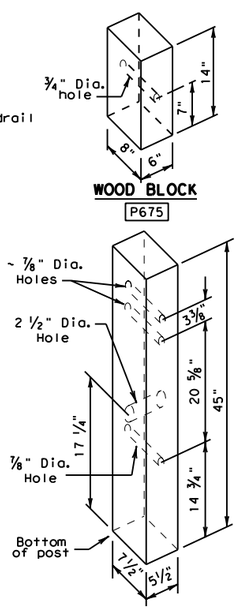

WOOD BLOCK

P675

All measurements should be taken from bottom of posts.

UNIVERSAL WOOD POST

P650

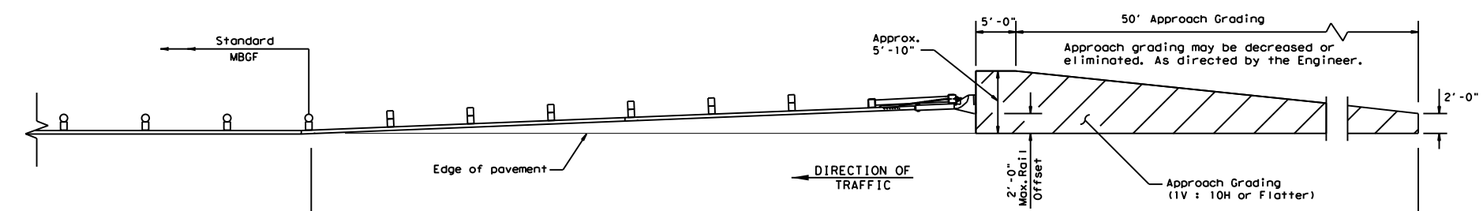

Note: Site Condition(s)
Site conditions may exist where grading is required for the proper installation of metal guard fence and end treatments.

APPROACH GRADING AT GUARDRAIL END TREATMENTS

POST & TUBE OPTIONS	
Type I	post (1) thru (2)
Type II	post (1) thru (4)
Type III	post (1) thru (8)

Texas Department of Transportation — Design Division Standard

SINGLE GUARDRAIL TERMINAL (SKT 350) (WOOD POST)

SGT(8)-14

FILE: sgt814.dgn	DN: TxDOT	CK: AM	DW: BD/VP	CK: VP
© TxDOT July 2001	CONT	SECT	JOB	HIGHWAY
REVISIONS	DIST	COUNTY		SHEET NO.
				100 OF 152

DATE:
FILE:

DISCLAIMER:
The use of this standard is governed by the "Texas Engineering Practice Act". No warranty of any kind is made by TxDOT for any purpose whatsoever. TxDOT assumes no responsibility for the conversion of this standard to other formats or for incorrect results or damages resulting from its use.

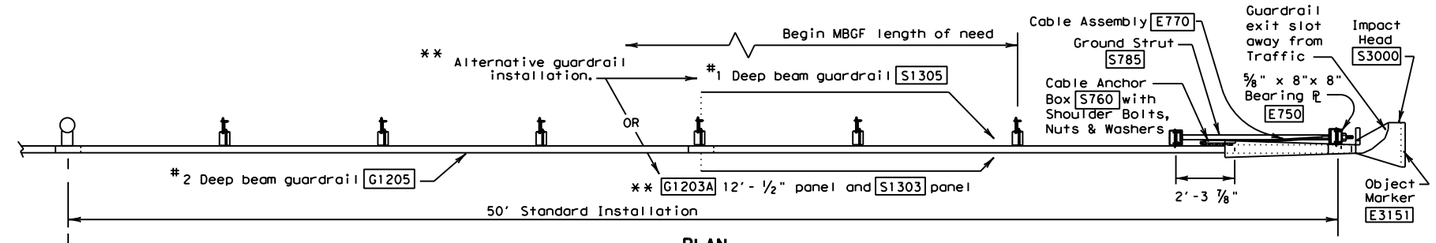

PLAN

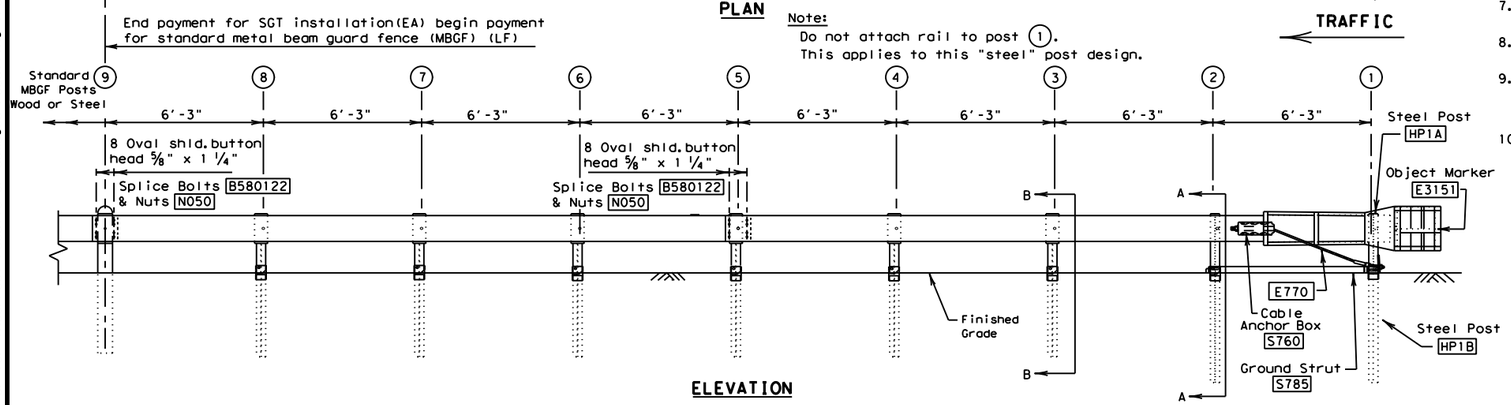

ELEVATION

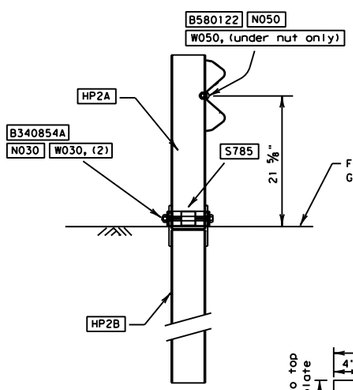

SECTION A-A
at post 2

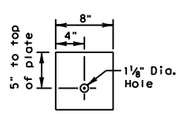

BEARING PLATE
E750

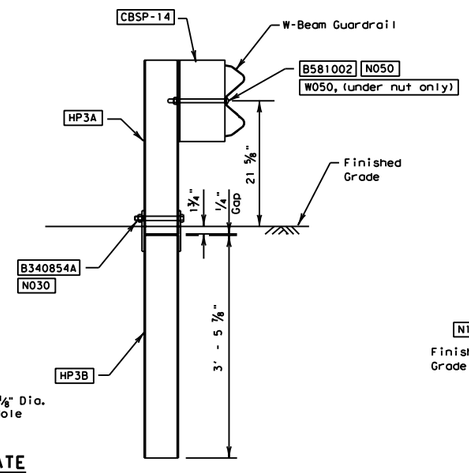

SECTION B-B
at post 3 thru 8

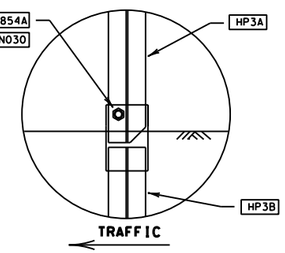

HINGED POST
Posts 3 thru 8

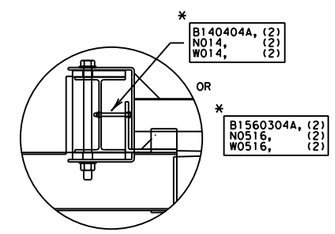

IMPACT HEAD CONNECTION DETAIL

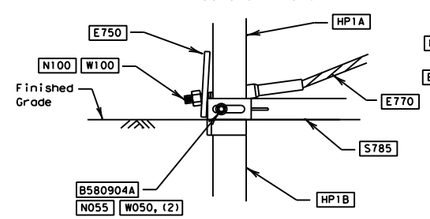

SIDE VIEW

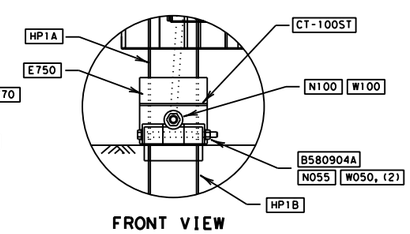

FRONT VIEW

POST #1 CONNECTION DETAILS

GENERAL NOTES

1. For additional information contact: Interstate Steel Inc. (432) 263-3725
2. All bolts, nuts cable assemblies, cable anchors, steel tubes & bearing plates shall be galvanized.
3. SGT's placed within the "minimum" 150 ft. radius, shall be installed straight. Standard rail elements may be installed within the radius, without special fabrication.
4. A flare rate of 25:1 may be used over the first 50 ft. of the system to prevent the terminal head from encroaching the shoulder. The flare may be decreased or eliminated for specific installations, if directed by the Engineer.
5. The lower sections of the post shall not protrude more than 4 inches above finished ground. Site grading may be necessary to meet this requirement.
6. The lower section of the steel posts should not be driven with the upper post attached. If the post is placed in a drilled hole, the backfill material must be satisfactorily compacted to prevent settlement.
7. If solid rock is encountered. See manufacturer's installation manual for the proper installation guidance.
8. The breakaway cable assembly must be taut. A locking device,(vice grips or channel lock pliers) should be used to prevent the cable from twisting when tightening the nuts.
9. Hinge bolts shall not be set below finished grade. At curb locations the posts shall be installed at the proper grade elevation behind the curb. The posts will then require field drilling new holes to accommodate the rail to post connection bolt to maintain the proper height of the rail above the gutter pan. The excess post length above the rail will be removed if directed by the Engineer.
10. An object marker shall be installed on the front of the impact head as detailed on D&OM(VIA).

Note.
See Alternative Guardrail Installation. **

ITEM NO.	QTY	BILL OF MATERIALS
S3000	1	IMPACT HEAD
S1305	1	W-BEAM GUARDRAIL END SECTION - 12 GA., 25'
OR G1205	1	W-BEAM GUARDRAIL - 12 GA., 25'
S1303	1	W-BEAM GUARDRAIL (12 GA.) 12'-6" SKT
G1203A	1	W-BEAM GUARDRAIL (12 GA.) 12'-6"
HP1A	1	FIRST POST ASSEMBLY TOP, 2'- 4 ⅜"
HP1B	1	FIRST POST ASSEMBLY BOTTOM, 6'- 0"
HP2A	1	SECOND POST ASSEMBLY TOP, 2'- 6 ⅜"
HP2B	1	SECOND POST ASSEMBLY BOTTOM, 6'- 0"
HP3A	6	HINGED LINE POST TOP, 2'- 5 ⅝"
HP3B	6	HINGED LINE POST BOTTOM, 3'- 5 ⅞"
E750	1	BEARING PLATE
S760	1	CABLE ANCHOR BOX
E770	1	BCT CABLE ANCHOR ASSEMBLY
S785	1	GROUND STRUT (SPECIAL FOR HINGED POST)
CBSP-14	6	ROUTED BLOCK
CT-100ST	1	CABLE TIE - STEEL
HARDWARE		
B580122	17	⅝" Dia. x 1¼" SPLICE BOLT, POST #2
B580904A	1	⅝" Dia. x 9" HEX BOLT GR. 5
B340854A	7	¾" Dia. x 8 ½" HEX BOLT GR. 5
B581002	6	⅝" Dia. x 10" H.G.R. BOLT (Posts 3 Thru 8)
N050	23	⅝" Dia. H.G.R. NUT (at Splice (16) & Posts 2 Thru 8)
N055	1	⅝" Dia. HEX NUT (Post 1 only)
W050	9	H.G.R. WASHER (At Post 1 (2), & Post 2 thru 8)
N100	2	1" ANCHOR CABLE HEX NUT
W100	2	1" ANCHOR CABLE WASHER
* B140404A	2	¼" x 4" HEX BOLT GR. 5
* N014	2	¼" HEX NUT
* OR W014	2	¼" WASHER
* B1560304A	2	5/16" x 4" HEX BOLT GR. 5
* N0516	2	5/16" HEX NUT
* W0516	2	5/16" WASHER
SB12A	8	CABLE ANCHOR BOX SHOULDER BOLT
N030	7	¾" HEX NUT
N012A	8	½" STR. NUT
W030	2	WASHER
W012A	8	½" STR. WASHER
E3151	1	OBJECT MARKER (18" x 18")

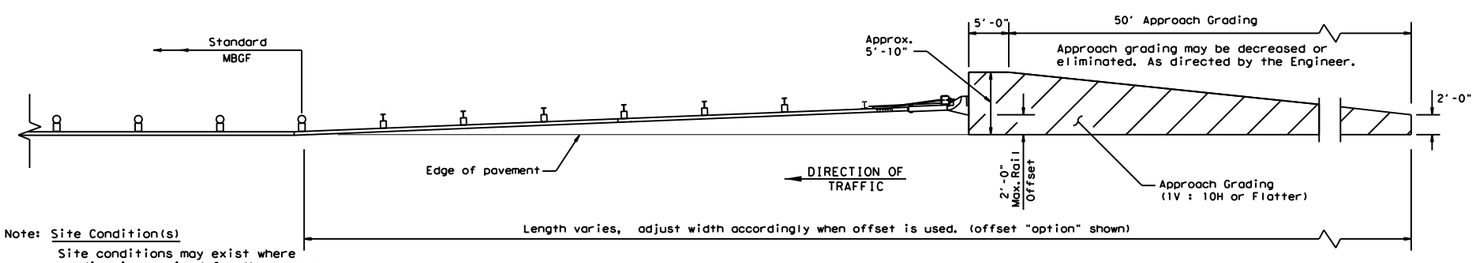

Note: Site Condition(s)
Site conditions may exist where grading is required for the proper installation of metal guard fence and end treatments.

APPROACH GRADING AT GUARDRAIL END TREATMENTS

Texas Department of Transportation — Design Division Standard

SINGLE GUARDRAIL TERMINAL
(SKT 350)
(HINGED STEEL POST)
SGT(8)H-14

FILE: sgt8h14.dgn	DN: TxDOT	CK: AM	DW: BD/VP	CK: VP
© TxDOT February 2003	CONT	SECT	JOB	HIGHWAY
REVISIONS	DIST	COUNTY		SHEET NO.
				101 OF 152

DATE:
FILE:

DISCLAIMER:
The use of this standard is governed by the "Texas Engineering Practice Act". No warranty of any kind is made by TxDOT for any purpose whatsoever. TxDOT assumes no responsibility for the conversion of this standard to other formats or for incorrect results or damages resulting from its use.

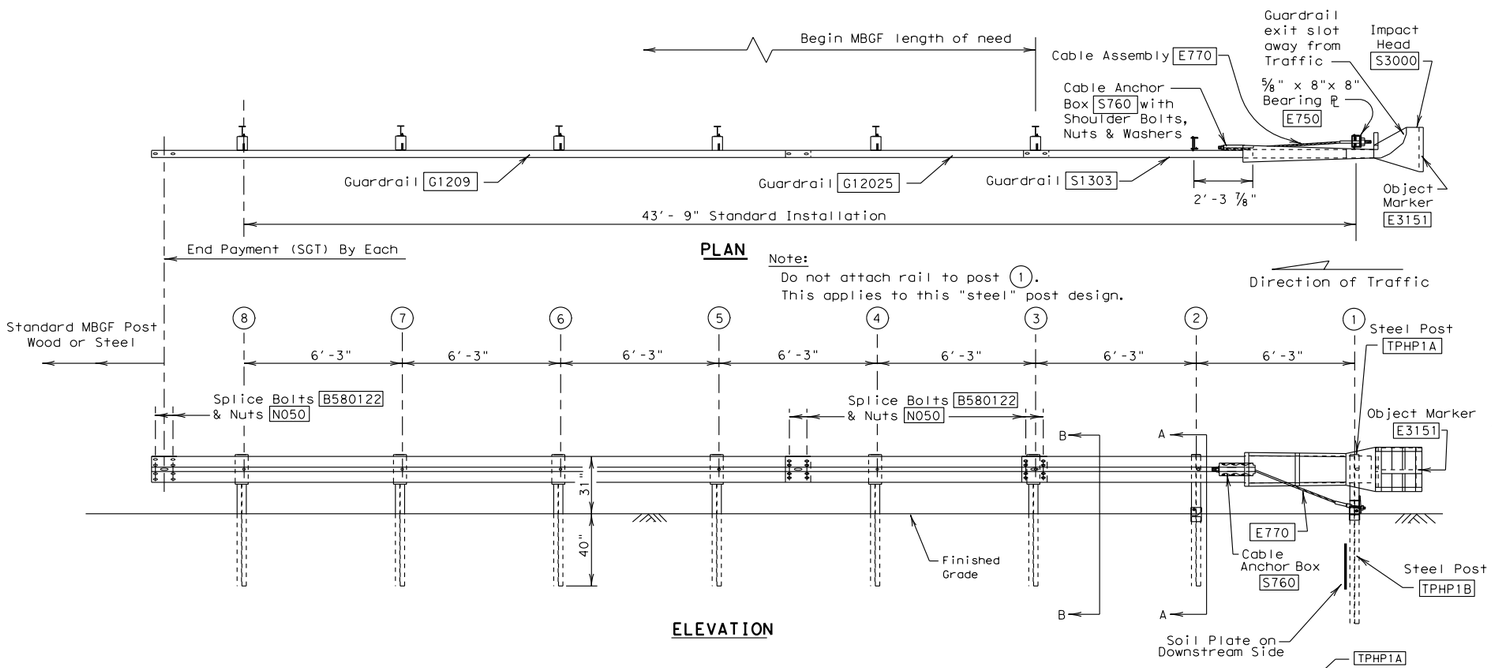

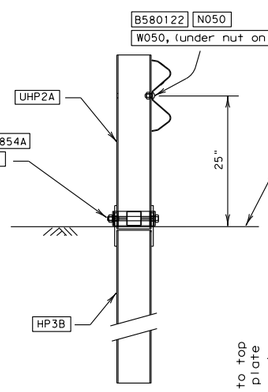

SECTION A-A
at post 2

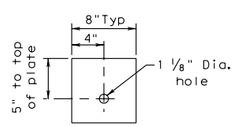

BEARING PLATE
E750

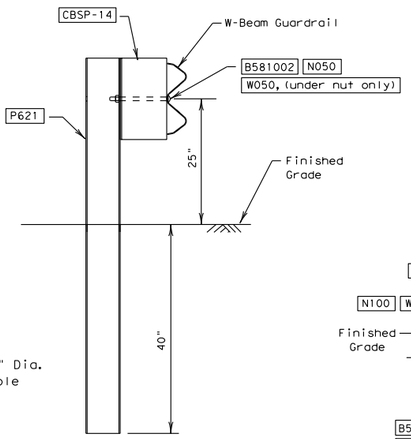

SECTION B-B
at post 3 thru 8

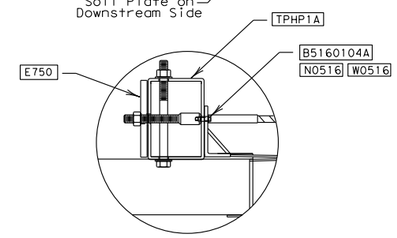

IMPACT HEAD CONNECTION DETAIL

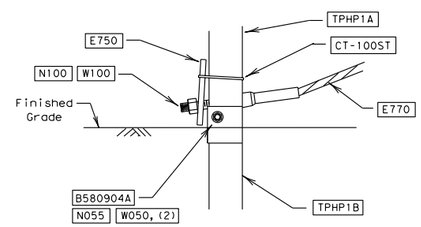

SIDE VIEW

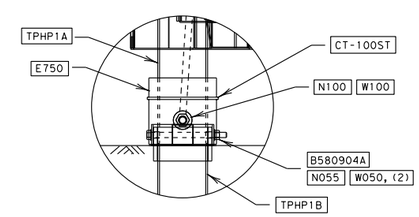

FRONT VIEW

POST #1 CONNECTION DETAILS

GENERAL NOTES

1. For additional information contact: Interstate Steel Inc., (432) 263-3725.
2. All bolts, nuts cable assemblies, cable anchors, steel posts & bearing plates shall be galvanized.
3. SGT's placed within the "minimum" 150 ft. radius, shall be installed straight. Standard rail elements may be installed within the radius without special fabrication.
4. A flare rate of 25:1 may be used to prevent the terminal head from encroaching on the shoulder. The flare may be decreased or eliminated for specific installations, if directed by the Engineer.
5. The lower sections of the post shall not protrude more than 4 inches above finished ground. Site grading may be necessary to meet this requirement.
6. The lower section of the steel posts should not be driven with the upper post attached. If the post is placed in a drilled hole, the backfill material must be satisfactorily compacted to prevent settlement.
7. If solid rock is encountered. See manufacturer's installation manual for the proper installation guidance.
8. The breakaway cable assembly must be taut. A locking device, (vice grips or channel lock pliers) should be used to prevent the cable from twisting when tightening the nuts.
9. Hinge bolts shall not be set below finished grade. At curb locations the posts shall be installed at the proper grade elevation behind the curb. The posts will then require field drilling new holes to accommodate the rail to post connection bolt to maintain the proper height of the rail above the gutter pan. The excess post length above the rail will be removed as directed by the Engineer.
10. An object marker shall be installed on the front of the impact head as detailed on D&OM(VIA).

ITEM NO.	QTY	BILL OF MATERIALS
S1303	1	GUARDRAIL (12 GA) 12'- 6" SKT Panel
G12025	1	GUARDRAIL (12 GA) 9' - 4 1/2"
G1209	1	GUARDRAIL (12 GA) 25'- 0"
TPHP1A	1	FIRST POST ASSEMBLY TOP, TUBE
TPHP1B	1	FIRST POST ASSEMBLY BOTTOM, 6'- 0"
UHP2A	1	SECOND POST ASSEMBLY TOP
HP3B	1	SECOND POST ASSEMBLY BOTTOM, 3'- 5 7/8"
P621	6	STANDARD STEEL LINE POST 6'- 0" (POST 3 THRU 8)
E750	1	BEARING PLATE
S760	1	CABLE ANCHOR BOX
E770	1	BCT CABLE ANCHOR ASSEMBLY
CT-100ST	1	CABLE TIE - STEEL
CBSP-14	6	ROUTED BLOCK
S3000	1	IMPACT HEAD
HARDWARE		
B580122	25	5/8" Dia. x 1 1/4" SPLICE BOLT
B580904A	1	5/8" Dia. x 9" HEX BOLT GR. 5
B340854A	1	3/4" Dia. x 8 1/2" HEX BOLT GR. 5
B581002	6	5/8" Dia. x 10" H.G.R. BOLT (Post 3 thru 8)
N055	1	5/8" Dia. HEX NUT (Post 1 only)
N050	31	5/8" Dia. H.G.R. NUT (at splices & at Post 2 thru 8)
W050	9	H.G.R. WASHER (At Post 1(2) & 2 thru 8)
N100	2	1" ANCHOR CABLE HEX NUT
W100	2	1" ANCHOR CABLE WASHER
B5160104A	2	5/16" x 1" HEX BOLT, GR. 5
N0516	2	5/16" HEX NUT
W0516	4	5/16" WASHER
SB12A	8	CABLE ANCHOR BOX SHOULDER BOLT
N030	1	3/4" HEX NUT
N012A	8	1/2" STR. NUT
W012A	8	1/2" STR. WASHER
E3151	1	OBJECT MARKER (18" x 18")

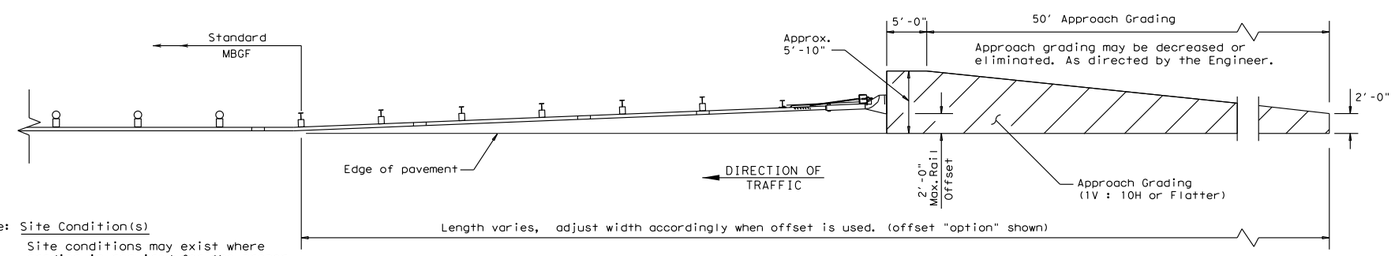

Note: Site Condition(s)
Site conditions may exist where grading is required for the proper installation of metal guard fence and end treatments.

APPROACH GRADING AT GUARDRAIL END TREATMENTS

Texas Department of Transportation — Design Division Standard

SINGLE GUARDRAIL TERMINAL (SKT-31) (STEEL POST)

SGT(8S)31-14

FILE: sgt8s314.dgn	DN: TxDOT	CK: AM	DW: BD/VP	CK: VP
© TxDOT December 2011	CONT	SECT	JOB	HIGHWAY
REVISIONS				
	DIST	COUNTY		SHEET NO.
				102 OF 152

DATE:
FILE:

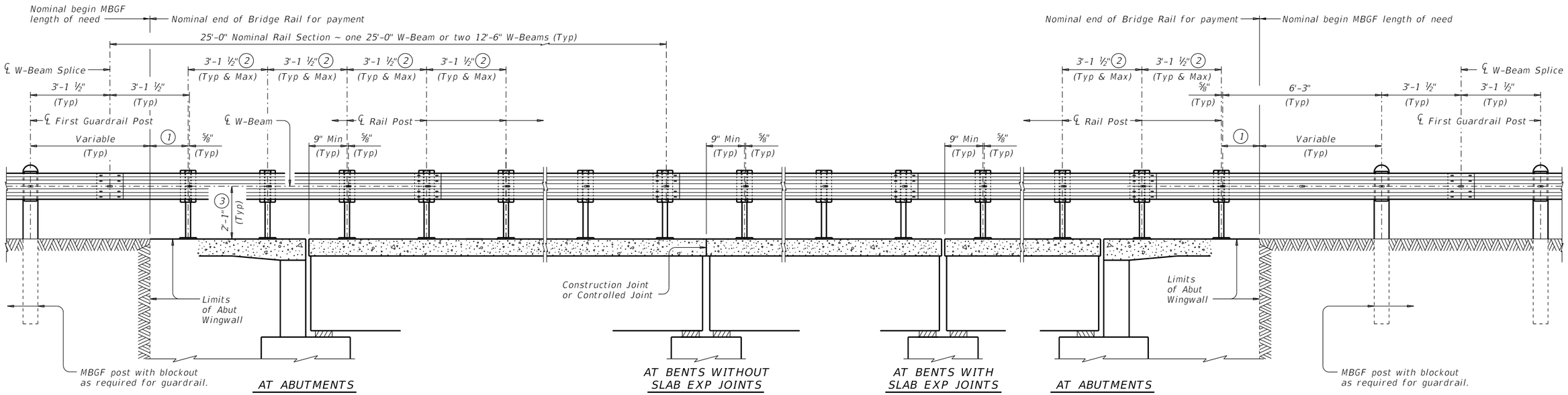

ROADWAY ELEVATION OF RAIL

1. 9" Min, 5'-9" Max
2. Maintain 3'-1 ½" Rail Post spacing wherever possible for use with nominal 25'-0" or 12'-6" W-Beam sections. Symmetry of post spacing on both sides and along the structure is not necessary.
3. Increase 2" for structures with overlay.
4. Tighten the first hex nut by hand until the top and bottom edges of the W-Beam engage the Backer Plate (Backer Plate should be snug against the post). Then tighten hex nut one revolution with wrench and secure with the second hex nut.
5. PL ⅛ x 1 ¾ x 1¾ with ⅜ Dia Hole centered in PL, ASTM-A36. Square Guardrail Washer (FWR01).

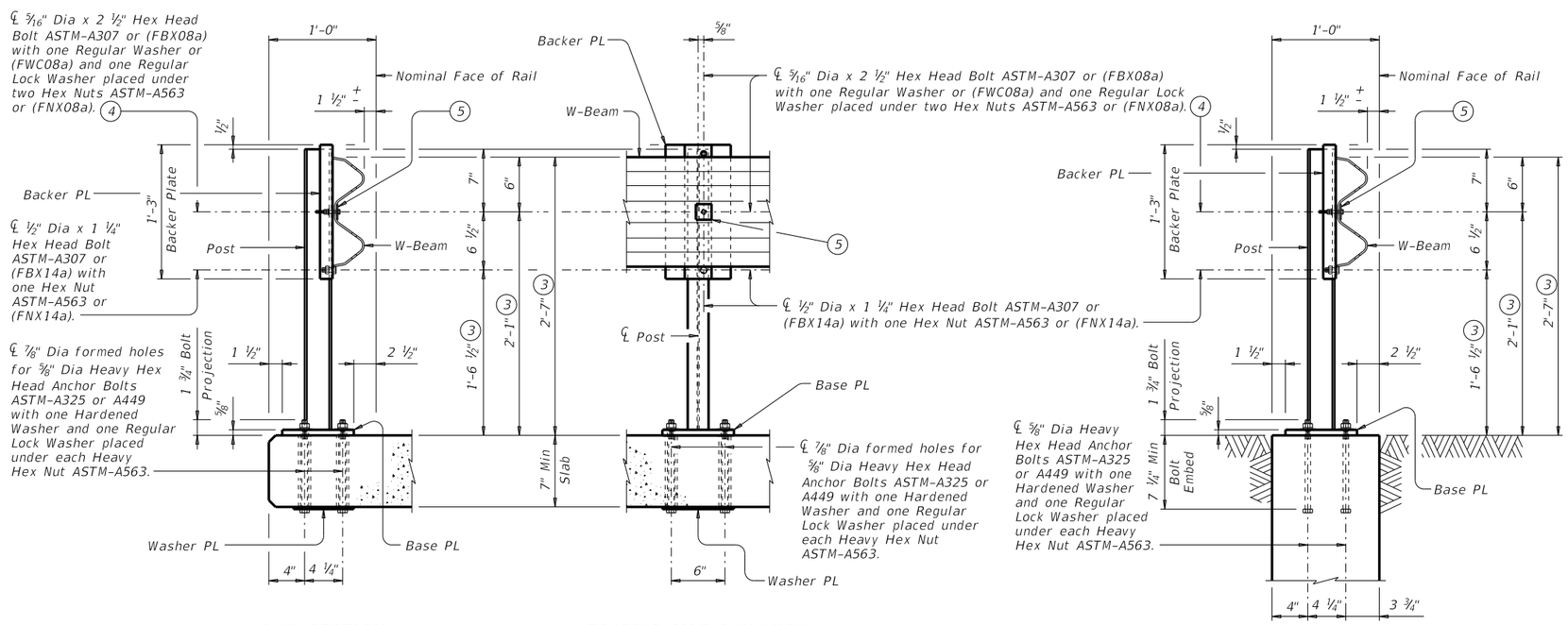

RAIL SECTION

TRAFFIC SIDE RAIL VIEW

RAIL DETAILS ON BRIDGE SLAB

RAIL SECTION ON ABUTMENT WINGWALL

SHEET 1 OF 2

Texas Department of Transportation

Bridge Division Standard

TRAFFIC RAIL

TYPE T631

FILE: rlstd038.dgn	DN: TxDOT	CK: AES	DW: JTR	CK: AES
©TxDOT July 2014	CONT	SECT	JOB	HIGHWAY
REVISIONS	DIST		COUNTY	SHEET NO.
				103 OF 152

DISCLAIMER:
The use of this standard is governed by the "Texas Engineering Practice Act". No warranty of any kind is made by TxDOT for any purpose whatsoever. TxDOT assumes no responsibility for the conversion of this standard to other formats or for incorrect results or damages resulting from its use.

DATE:
FILE:

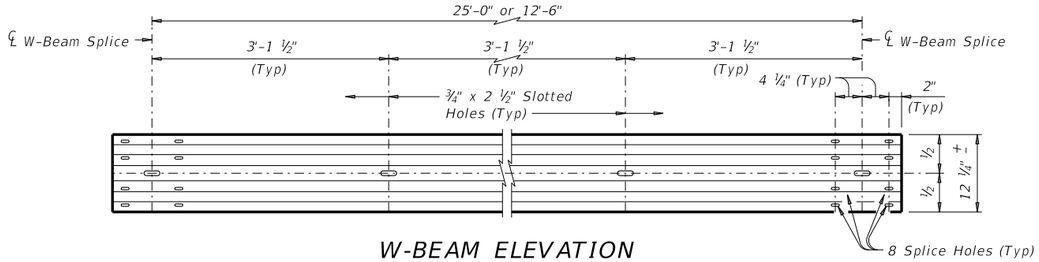

W-BEAM ELEVATION

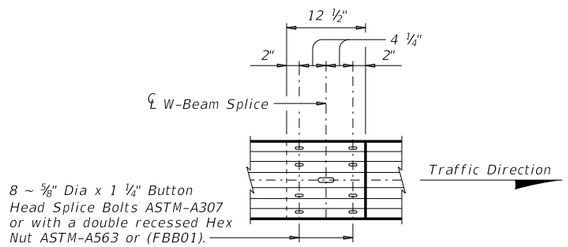

W-BEAM SPLICE ELEVATION

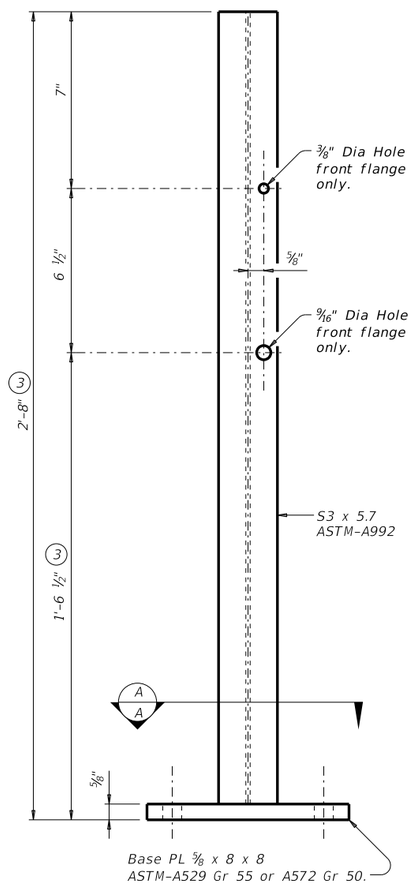

POST ELEVATION

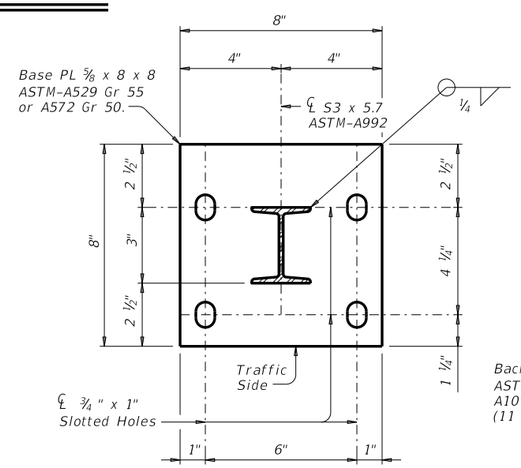

SECTION A-A

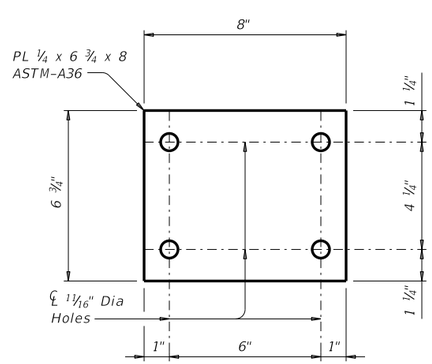

WASHER PLATE DETAIL

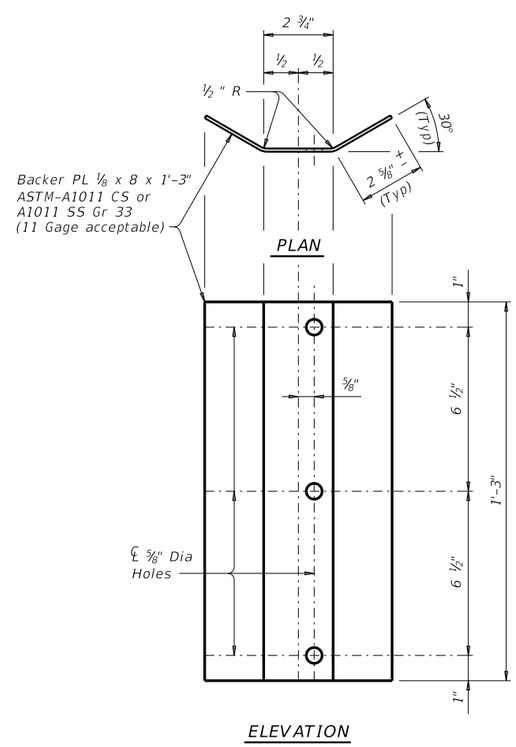

BACKER PLATE

③ Increase 2" for structures with overlay.

CONSTRUCTION NOTES:

Face of rail post must be plumb unless otherwise approved by the Engineer. Post must be perpendicular to adjacent roadway grade. Use epoxy mortar under post base plates if gaps larger than 1⁄16" exist.

Fully anchored guardrail must be attached to each end of rail. A metal beam guard fence transition is not used with this rail.

It is recommended to show a Rail Layout with rail posts and W-beam splices. Fabricator must submit erection drawings to the Engineer for approval.

Round or chamfer exposed edges of rail post and backer plate to approximately 1⁄16" by grinding.

Shop drawings are not required for this rail.

MATERIAL NOTES:

Galvanize all steel components.

Anchor bolts for base plate must be ⅝" Dia ASTM-A325 or A449 bolts with one hardened washer and one regular lock washer placed under each heavy hex nut. Nuts must conform to A563 requirements.

W-beam must meet the requirements of Item 540, "Metal Beam Guard Fence" except as modified in the plans. The Contractor may furnish rail elements of 25'-0", or 12'-6" (Nominal) lengths. W-Beam must have slotted holes at 3'-1 ½".

Some part numbers from the "Task Force 13" Guide to Standardized Highway Barrier Hardware have been furnished for quick reference.

GENERAL NOTES:

This railing has been successfully evaluated by full-scale crash test to meet MASH TL-3 criteria. This railing can be used for speeds of 50 mph and greater.

This rail is designed to deflect approximately 4' to 4'-6" as it contains and redirects the errant vehicle. This rail may not be installed on top of or behind curbs that project above finished grade, on bridges with expansion joints providing more than 5" movement, on retaining walls, or on grade separations and interchanges.

Repairs to impact-damaged post and base plate unit are not permitted. Replace all impact-damaged posts with a new post and base plate unit.

Average weight of railing with no overlay: 19 plf total.

DISCLAIMER:
The use of this standard is governed by the "Texas Engineering Practice Act". No warranty of any kind is made by TxDOT for any purpose whatsoever. TxDOT assumes no responsibility for the conversion of this standard to other formats or for incorrect results or damages resulting from its use.

DATE:
FILE:

SHEET 2 OF 2

Texas Department of Transportation — Bridge Division Standard

TRAFFIC RAIL

TYPE T631

FILE: rlstd038.dgn	DN: TxDOT	CK: AES	DW: JTR	CK: AES
©TxDOT July 2014	CONT	SECT	JOB	HIGHWAY
REVISIONS				
	DIST	COUNTY		SHEET NO.
				104 OF 152

DISCLAIMER:
The use of this standard is governed by the "Texas Engineering Practice Act". No warranty of any kind is made by TxDOT for any purpose whatsoever. TxDOT assumes no responsibility for the conversion of this standard to other formats or for incorrect results or damages resulting from its use.

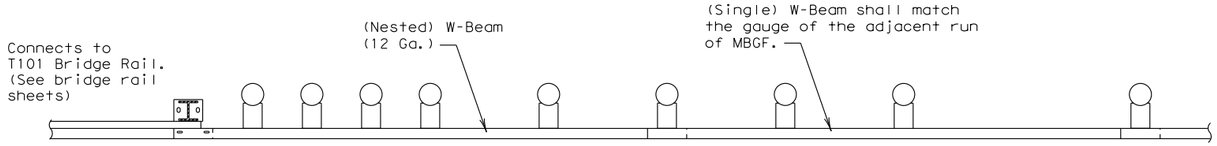

TYPICAL PLAN VIEW

Direction of Traffic

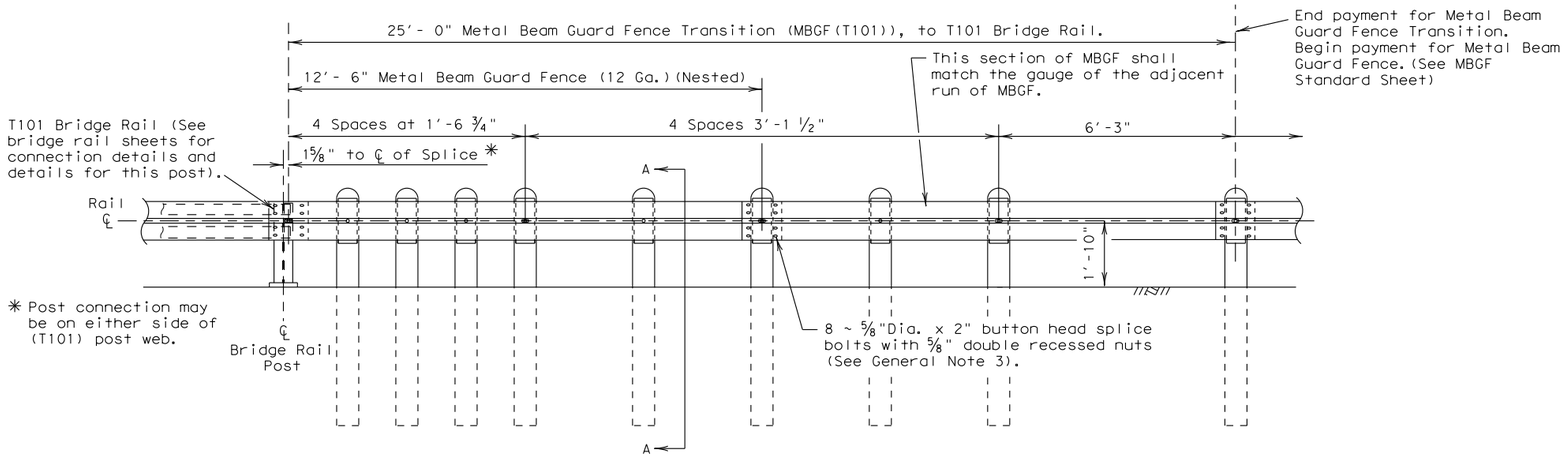

TYPICAL ELEVATION VIEW

GENERAL NOTES

1. The type of post (round wood post, rectangular wood post, or steel post) will be shown elsewhere in the plans. The exact position of transitions shall be shown elsewhere in the plans or as directed by the Engineer.
2. Rail element shall meet the requirements of Item 540, "Metal Beam Guard Fence" except as modified on the plans.
3. Button head "post" bolts (ASTM A307) shall be of sufficient length to extend through the full thickness of the nut (ASTM A563) and the Type A 1 3/4" O.D. washer and not more than 1" beyond it. Button head "splice" bolts (ASTM A307) are 5/8" x 2" (at triple rail splices) with a 5/8" double recessed nuts (ASTM A563).
4. Fittings (bolts, nuts, and washers) shall be galvanized in accordance with Item 445, "Galvanizing." Fittings shall be subsidiary to the bid item requiring construction of the transition.
5. Crown will be widened to accommodate transitions.
6. If solid rock is encountered. See the MBGF standard sheet for proper installation guidance.
7. Posts shall not be set in concrete.
8. Unless otherwise shown in the plans, a composite material post and/or block that meets the requirements of DMS-7210, "Composite Material Posts and Blocks for Metal Beam Guard Fence" may be substituted for posts and/or blocks of similar dimensions. The Construction Division, TxDOT, maintains a Material Producer List (MPL) for producers of materials conforming to DMS-7210. Only producers on the MPL can furnish composite material posts and/or blocks.
8. Refer to MBGF Standard Sheet for additional details.

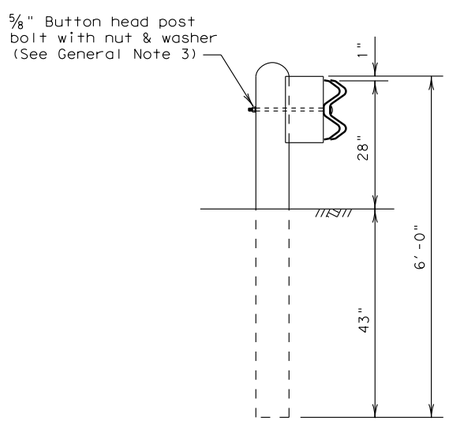

SECTION A-A

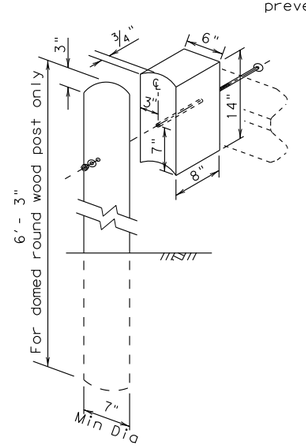

WOOD BLOCK TO
ROUND WOOD POST

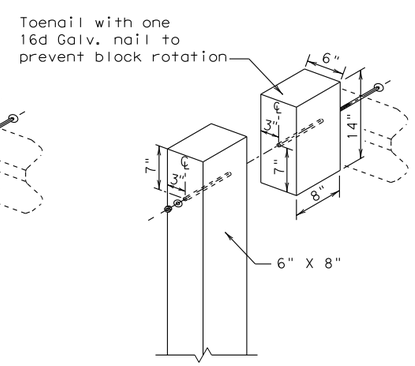

WOOD BLOCK TO RECTANGULAR
WOOD POST

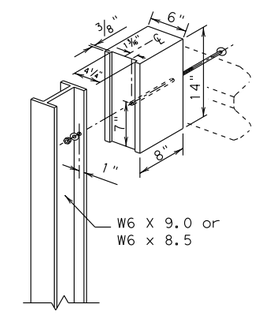

WOOD BLOCK TO
STEEL POST

Texas Department of Transportation

Design Division Standard

METAL BEAM GUARD FENCE TRANSITION (T101)

(T101 Bridge Rail)

MBGF(T101)-11

FILE: mbgft111.dgn	DN: TxDOT	CK: AM	DW: BD	CK: VP
© TxDOT December 2001	CONT	SECT	JOB	HIGHWAY
REVISIONS 12-2011				
	DIST	COUNTY		SHEET NO.
				105 OF 152

DATE:
FILE:

DISCLAIMER: The use of this standard is governed by the "Texas Engineering Practice Act". No warranty of any kind is made by TxDOT for any purpose whatsoever. TxDOT assumes no responsibility for the conversion of this standard to other formats or for incorrect results or damages resulting from its use.

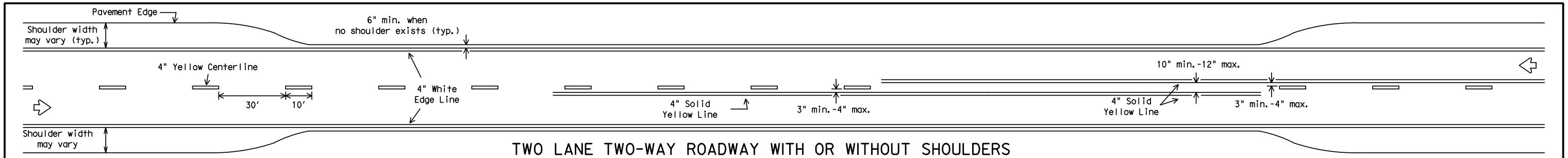

TWO LANE TWO-WAY ROADWAY WITH OR WITHOUT SHOULDERS

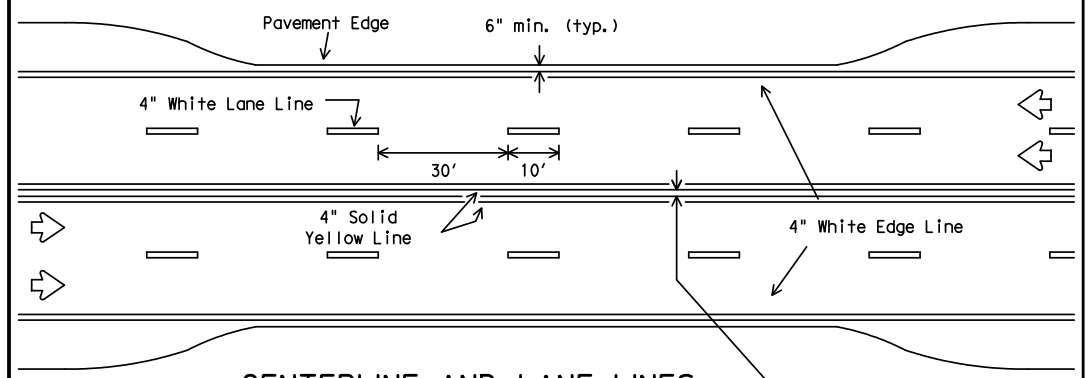

CENTERLINE AND LANE LINES FOUR LANE TWO-WAY ROADWAY WITH OR WITHOUT SHOULDERS

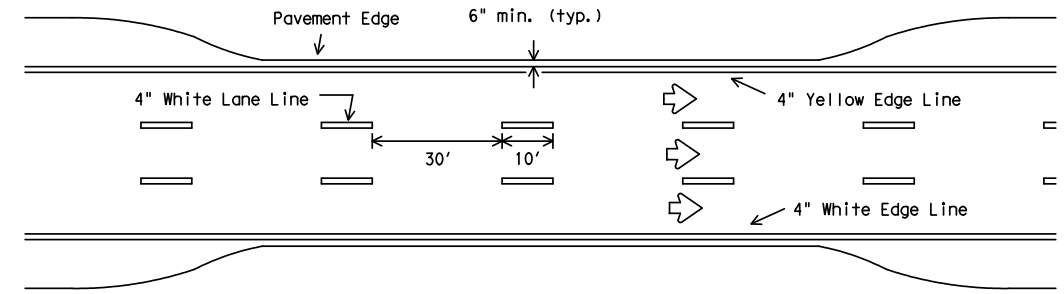

EDGE LINE AND LANE LINES ONE-WAY ROADWAY WITH OR WITHOUT SHOULDERS

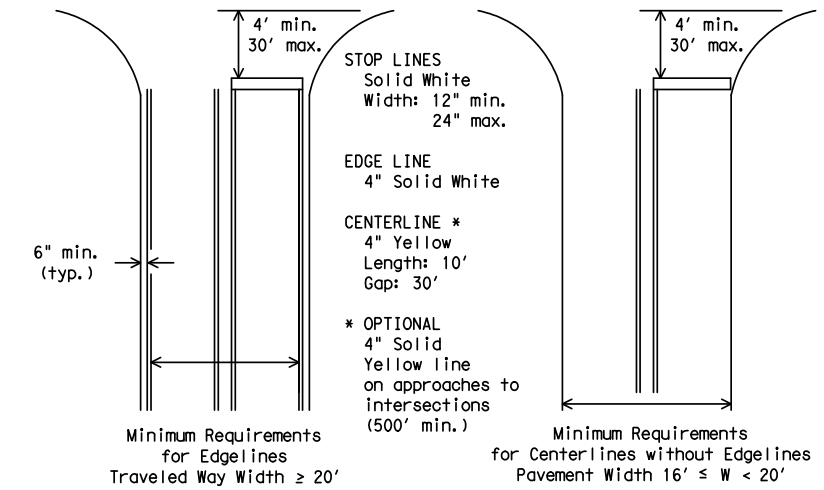

GUIDE FOR PLACEMENT OF STOP LINES, EDGE LINE & CENTERLINE

Based on Traveled Way and Pavement Widths for Undivided Highways

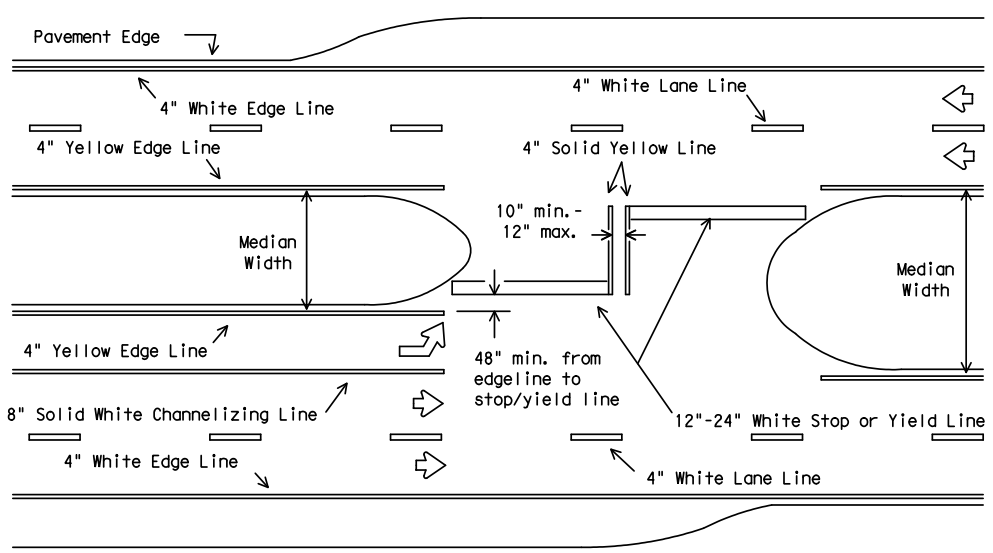

All medians shall be field measured to determine the location of necessary striping. Stop/Yield bars and centerlines shall be placed when the median width is greater than 30 ft. The median width is defined as the area between two roadways of a divided highway measured from edge of traveled way to edge of traveled way. The median excludes turn lanes. The median width might be different between intersections, interchanges and of opposite approaches of the same intersection. The narrow median width will be the controlling width to determine if markings are required.

FOUR LANE DIVIDED ROADWAY INTERSECTIONS

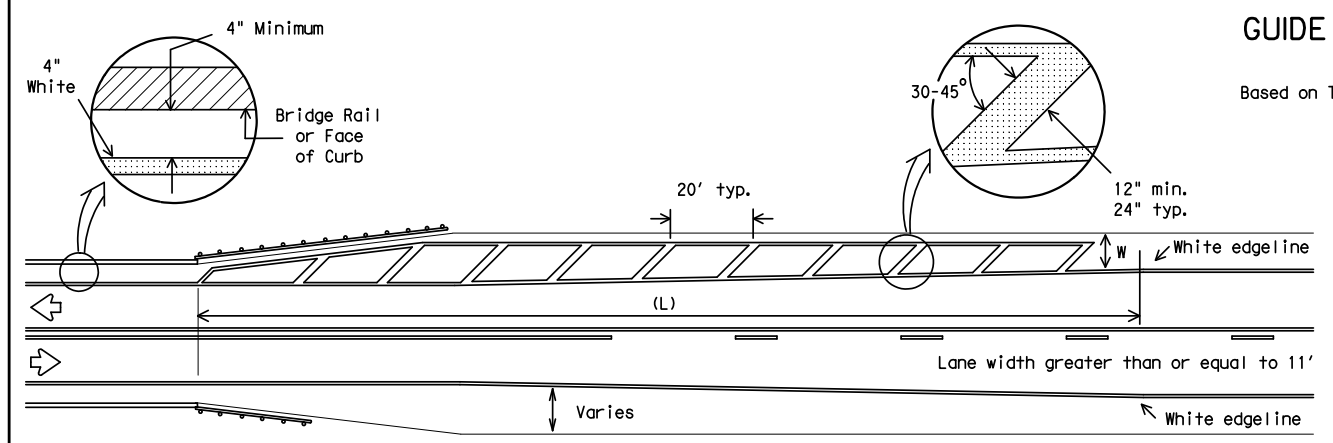

NOTES:

1. No-passing zone on bridge approach is optional but if used, it shall be a minimum 500 feet long.
2. For crosshatching length (L) see Table 1.
3. The width of the offset (W) and the required crosshatching width is the full shoulder width in advance of the bridge.
4. The crosshatching is not required if delineators or barrier reflectors are used along the structure.
5. For guard fence details, refer elsewhere in the plans.

ROADWAYS WITH REDUCED SHOULDER WIDTHS ACROSS BRIDGE OR CULVERT

TABLE 1 - TYPICAL LENGTH (L)

Posted Speed *	Formula
≤ 40	$L = \frac{WS^2}{60}$
≥ 45	L=WS

* 85th Percentile Speed may be used on roads where traffic speeds normally exceed the posted speed limit. Crosshatching length should be rounded up to nearest 5 foot increment.

L=Length of Crosshatching (FT.) W=Width of Offset (FT.)
S=Posted Speed (MPH)

EXAMPLES:

An 8 foot shoulder in advance of a bridge reduces to 4 feet on a 70 MPH roadway. The length of the cross-hatching should be:

$L = 8 \times 70 = 560$ ft.

A 4 foot shoulder in advance of a bridge reduces to 2 feet on a 40 MPH roadway. The length of the cross-hatching should be:

$L = 4(40)^2 / 60 = 106.67$ ft. rounded to 110 ft.

GENERAL NOTES

1. Edgeline striping shall be as shown in the plans or as directed by the Engineer. The edgeline should typically be placed a minimum of 6 inches from the edge of pavement. This distance may vary due to pavement raveling or other conditions. Edgelines are not required in curb and gutter sections of roadways.
2. The traveled way includes only that portion of the roadway used for vehicular travel and not the parking lanes, sidewalks, berms and shoulders. The traveled ways shall be measured from the inside of edgeline to inside of edgeline of a two lane roadway.

MATERIAL SPECIFICATIONS	
PAVEMENT MARKERS (REFLECTORIZED)	DMS-4200
EPOXY AND ADHESIVES	DMS-6100
BITUMINOUS ADHESIVE FOR PAVEMENT MARKERS	DMS-6130
TRAFFIC PAINT	DMS-8200
HOT APPLIED THERMOPLASTIC	DMS-8220
PERMANENT PREFABRICATED PAVEMENT MARKINGS	DMS-8240

All pavement marking materials shall meet the required Departmental Material Specifications as specified by the plans.

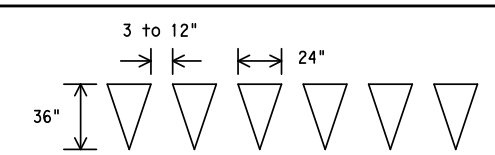

FOR POSTED SPEED ON ROAD BEING MARKED EQUAL TO OR GREATER THAN 45 MPH

FOR POSTED SPEED ON ROAD BEING MARKED EQUAL TO OR LESS THAN 40 MPH

YIELD LINES

Texas Department of Transportation
Traffic Operations Division

TYPICAL STANDARD PAVEMENT MARKINGS

PM(1)-12

© TxDOT November 1978

DN: TXDOT	CK: TXDOT	DW: TXDOT	CK: TXDOT
CONT	SECT	JOB	HIGHWAY
DIST	COUNTY		SHEET NO.
			106 OF 152

REVISIONS
8-95 2-12
5-00
8-00
3-03

22A

DATE:
FILE:

DISCLAIMER: The use of this standard is governed by the "Texas Engineering Practice Act". No warranty of any kind is made by TxDOT for any purpose whatsoever. TxDOT assumes no responsibility for the conversion of this standard to other formats or for incorrect results or damages resulting from its use.

REFLECTIVE RAISED PAVEMENT MARKERS FOR VEHICLE POSITIONING GUIDANCE

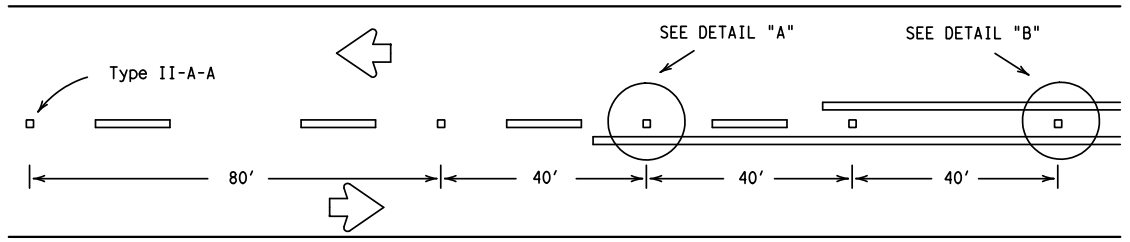

CENTERLINE FOR ALL TWO LANE ROADWAYS

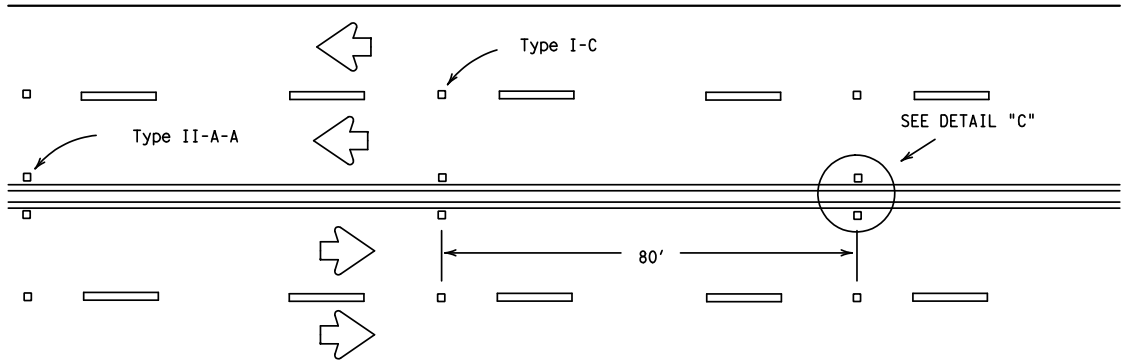

CENTERLINE & LANE LINES FOR FOUR LANE TWO-WAY HIGHWAYS

Raised pavement marker Type I-C, clear face toward normal traffic, shall be placed on 80-foot centers.

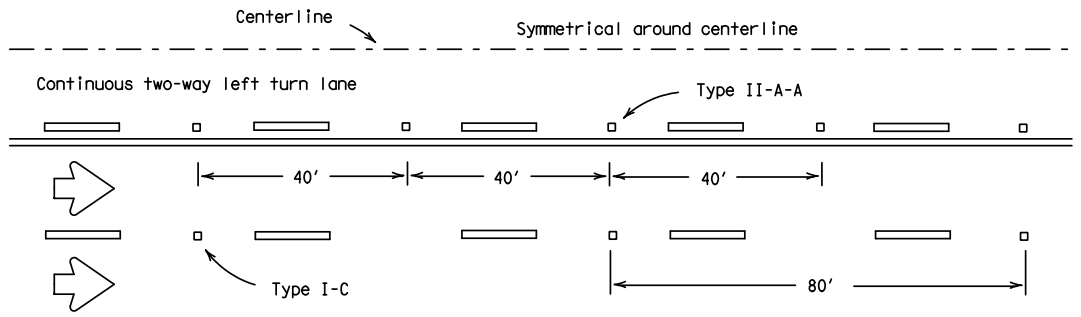

CENTERLINE AND LANE LINES FOR TWO-WAY LEFT TURN LANE

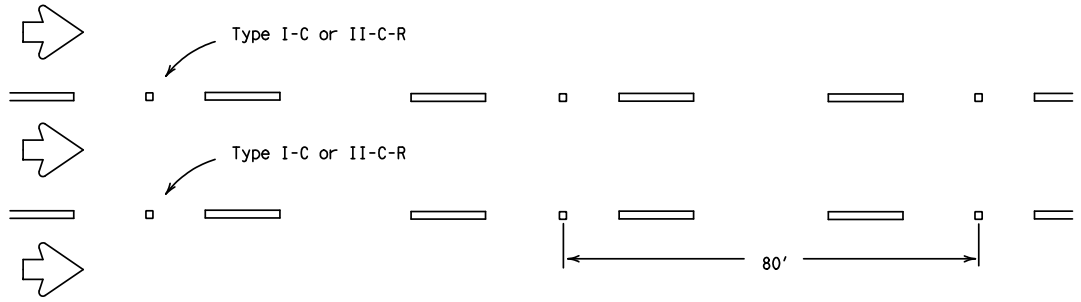

LANE LINES FOR ONE-WAY ROADWAY (NON-FREEWAY FACILITIES)

Raised pavement markers Type II-C-R shall have clear face toward normal traffic and red face toward wrong-way traffic.

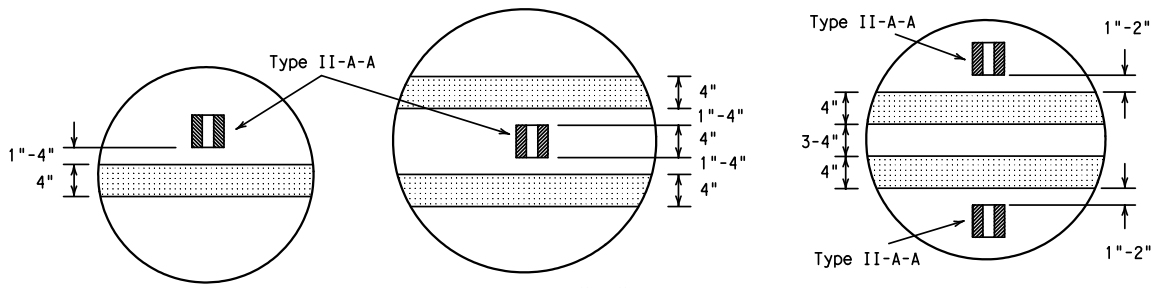

DETAIL "A" DETAIL "B" DETAIL "C"

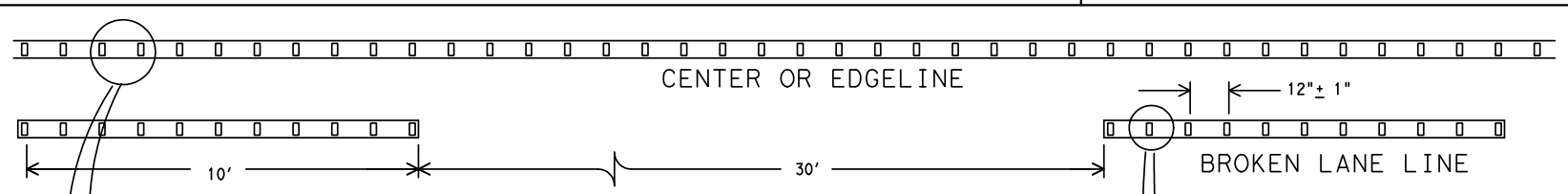

REFLECTORIZED PROFILE PATTERN DETAIL

USING REFLECTIVE PROFILE PAVEMENT MARKINGS

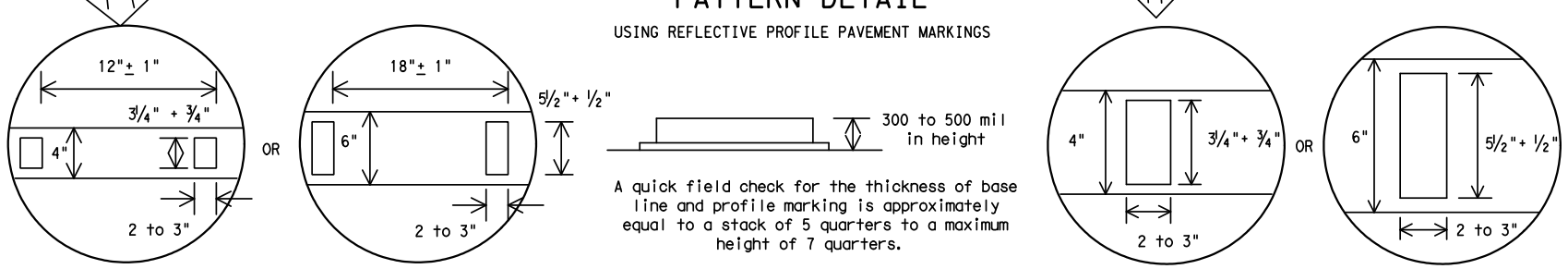

4" EDGE LINE OR CENTERLINE OPTIONAL 6" EDGE LINE OR CENTERLINE 4" LANE LINE OPTIONAL 6" LANE LINE

A quick field check for the thickness of base line and profile marking is approximately equal to a stack of 5 quarters to a maximum height of 7 quarters.

NOTE:

Profile markings shall not be placed on roadways with a posted speed limit of 45 MPH or less.

GENERAL NOTES

1. All raised pavement markers placed in broken lines shall be placed in line with and midway between the stripes.
2. On concrete pavements the raised pavement markers should be placed to one side of the longitudinal joints.

MATERIAL SPECIFICATIONS	
PAVEMENT MARKERS (REFLECTORIZED)	DMS-4200
EPOXY AND ADHESIVES	DMS-6100
BITUMINOUS ADHESIVE FOR PAVEMENT MARKERS	DMS-6130
TRAFFIC PAINT	DMS-8200
HOT APPLIED THERMOPLASTIC	DMS-8220
PERMANENT PREFABRICATED PAVEMENT MARKINGS	DMS-8240

All pavement marking materials shall meet the required Departmental Material Specifications as specified by the plans.

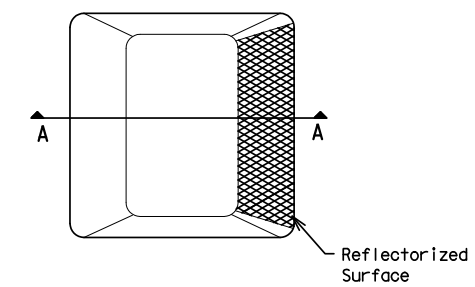

Type I (Top View)

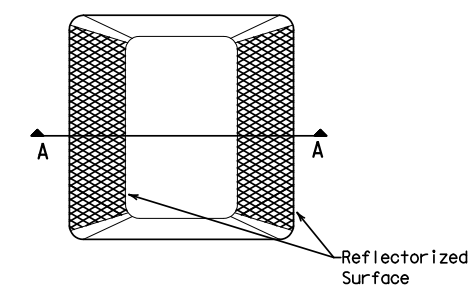

Type II (Top View)

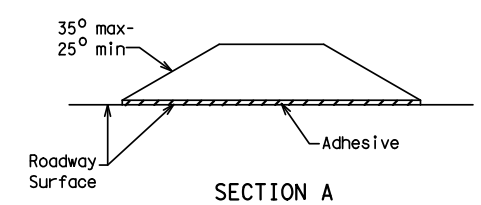

SECTION A

RAISED PAVEMENT MARKERS

Texas Department of Transportation
Traffic Operations Division

POSITION GUIDANCE USING RAISED MARKERS
REFLECTORIZED PROFILE MARKINGS

PM(2)-12

© TxDOT April 1977

DN: TXDOT	CK: TXDOT	DW: TXDOT	CK: TXDOT

REVISIONS		CONT	SECT	JOB	HIGHWAY
4-92	2-10				
5-00	2-12				
8-00		DIST		COUNTY	SHEET NO.
2-08					107 OF 152

22B

DATE:
FILE:

DISCLAIMER: The use of this standard is governed by the "Texas Engineering Practice Act". No warranty of any kind is made by TxDOT for any purpose whatsoever. TxDOT assumes no responsibility for the conversion of this standard to other formats or for incorrect results or damages resulting from its use.

SIGN SUPPORT DESCRIPTIVE CODES

(Descriptive Codes correspond to project estimate and quantities sheets)

SM RD SGN ASSM TY XXXXX(X)XX(X-XXXX)

Post Type

FRP = Fiberglass Reinforced Plastic Pipe (see SMD(FRP))
TWT = Thin-Walled Tubing (see SMD(TWT))
10BWG = 10 BWG Tubing (see SMD(SLIP-1) to (SLIP-3))
S80 = Schedule 80 Pipe (see SMD(SLIP-1) to (SLIP-3))

Number of Posts (1 or 2)

Anchor Type

UA = Universal Anchor - Concreted (see SMD(FRP) and (TWT))
UB = Universal Anchor - Bolted down (see SMD(FRP) and (TWT))
WS = Wedge Anchor Steel - (see SMD(TWT))
WP = Wedge Anchor Plastic (see SMD(TWT))
SA = Slipbase - Concreted (see SMD(SLIP-1) to (SLIP-3))
SB = Slipbase - Bolted Down (see SMD(SLIP-1) to (SLIP-3))

Sign Mounting Designation

P = Prefab. "Plain" (see SMD(SLIP-1) to (SLIP-3), (TWT), (FRP))
T = Prefab. "T" (see SMD(SLIP-1) to (SLIP-3), (TWT))
U = Prefab. "U" (see SMD(SLIP-1) to (SLIP-3))
IF REQUIRED
1EXT or 2EXT = Number of Extensions (see SMD(SLIP-1) to (SLIP-3), (TWT))
BM = Extruded Wind Beam (see SMD(SLIP-1) to (SLIP-3))
WC = 1.12 #/ft Wing Channel (see SMD(SLIP-1) to (SLIP-3))
EXAL = Extruded Aluminum Sign Panels (see SMD(SLIP-3))

REQUIRED CLEARANCE FOR BREAKAWAY SUPPORT

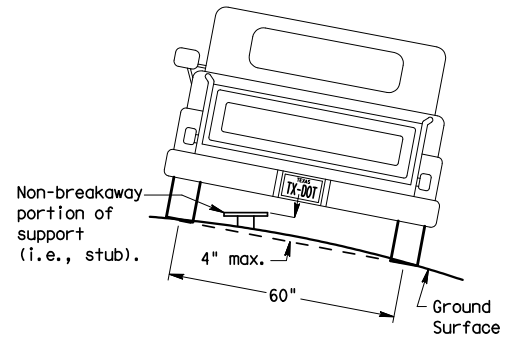

To avoid vehicle undercarriage snagging, any substantial remains of a breakaway support, when it is broken away, should not project more than 4 inches above a 60-inch chord (i.e., typical space between wheel paths).

SIGN LOCATION

PAVED SHOULDERS

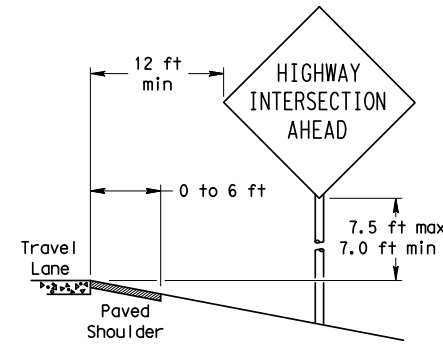

LESS THAN 6 FT. WIDE

When the shoulder is 6 ft. or less in width, the sign must be placed at least 12 ft. from the edge of the travel lane.

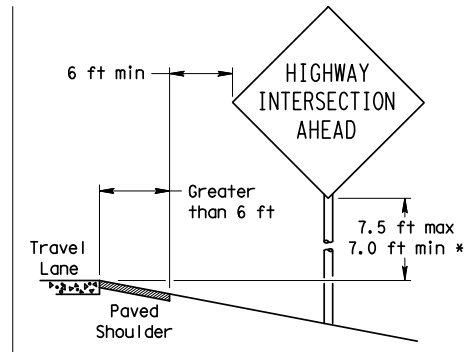

GREATER THAN 6 FT. WIDE

When the shoulder is greater than 6 ft in width, the sign must be placed at least 6 ft. from the edge of the shoulder.

T-INTERSECTION

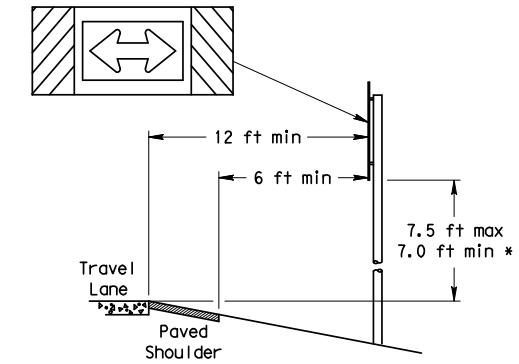

When this sign is needed at the end of a two-lane, two way roadway, the right edge of the sign should be in line with the centerline of the roadway. Place as close to ROW as practical.

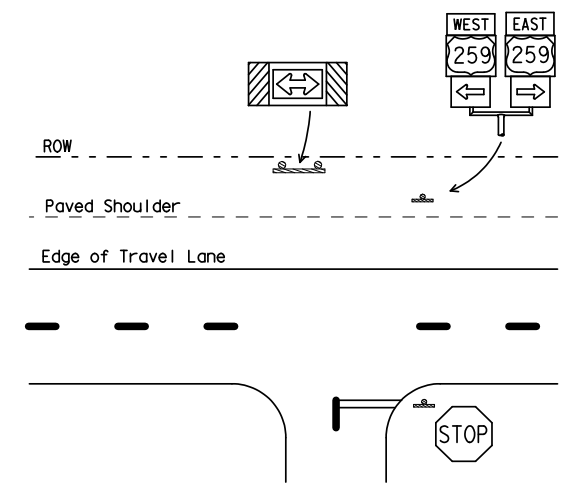

BEHIND BARRIER

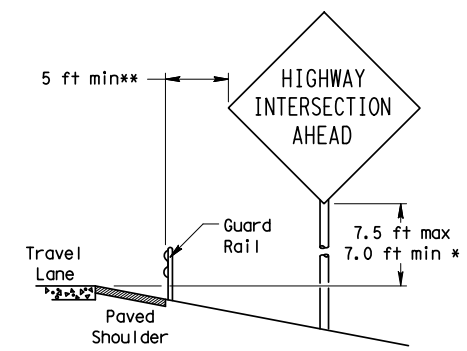

BEHIND GUARDRAIL

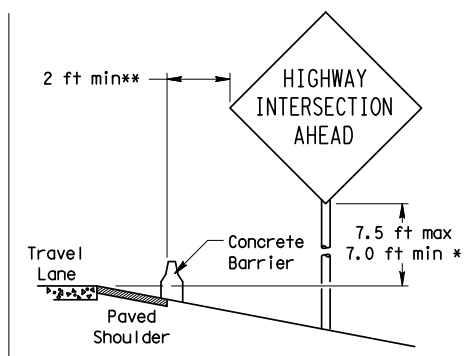

BEHIND CONCRETE BARRIER

**Sign clearance based on distance required for proper guard rail or concrete barrier performance.

* Signs shall be mounted using the following condition that results in the greatest sign elevation:

(1) a minimum of 7 to a maximum of 7.5 feet above the edge of the travel lane or

(2) a minimum of 7 to a maximum of 7.5 feet above the grade at the base of the support when sign is installed on the backslope.

The maximum values may be increased when directed by the Engineer.

See the Traffic Operations Division website for detailed drawings of sign clamps, Triangular Slipbase System components and Wedge Anchor System components.

The website address is:
http://www.txdot.gov/publications/traffic.htm

No more than 2 sign posts should be located within a 7 ft. circle.

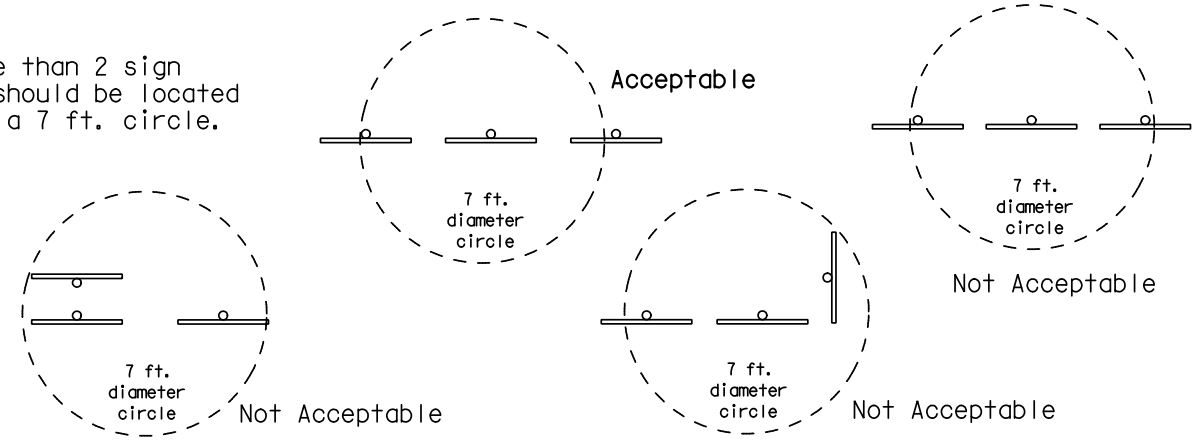

TYPICAL SIGN ATTACHMENT DETAIL

Single Signs

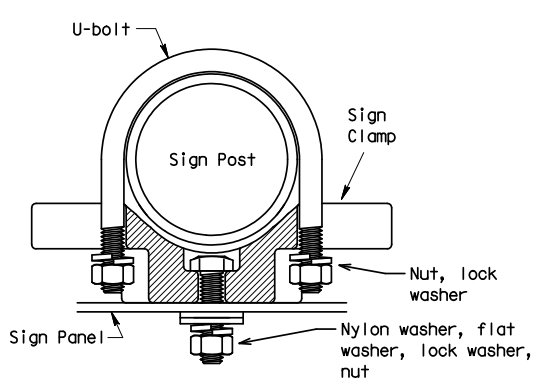

Bolts used to mount sign panels to the clamp are 5/16-18 UNC galvanized square head with nut, nylon washer, flat washer and lock washer. The bolt length is 1 inch for aluminum.

When two sign clamps are used to mount signs back-to-back, use a 5/16-18 UNC galvanized hex head per ASTM A307 with nut and helical-spring lock washer. The approximate bolt lengths for various post sizes and sign clamp types are given in the table at right. The bolt length may need to be adjusted depending upon field conditions.

Sign clamps may be either the specific size clamp or the universal clamp.

Back-to-Back Signs

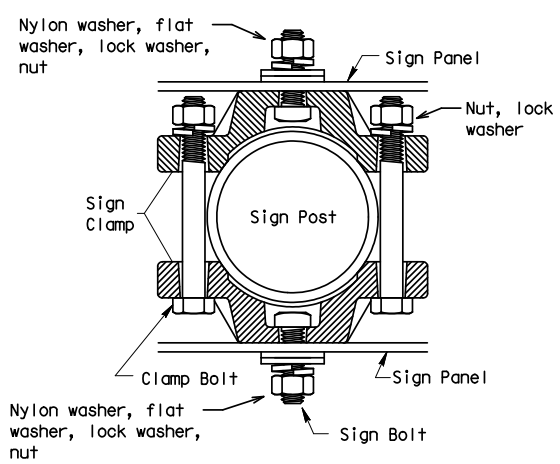

Pipe Diameter	Approximate Bolt Length	
	Specific Clamp	Universal Clamp
2" nominal	3"	3 or 3 1/2"
2 1/2" nominal	3 or 3 1/2"	3 1/2 or 4"
3" nominal	3 1/2 or 4"	4 1/2"

SIGNS WITH PLAQUES

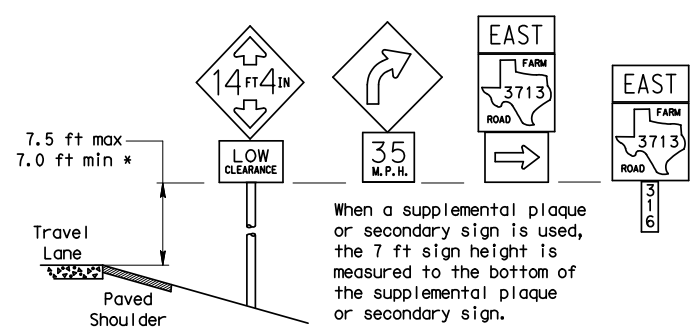

When a supplemental plaque or secondary sign is used, the 7 ft sign height is measured to the bottom of the supplemental plaque or secondary sign.

CURB & GUTTER OR RAISED ISLAND

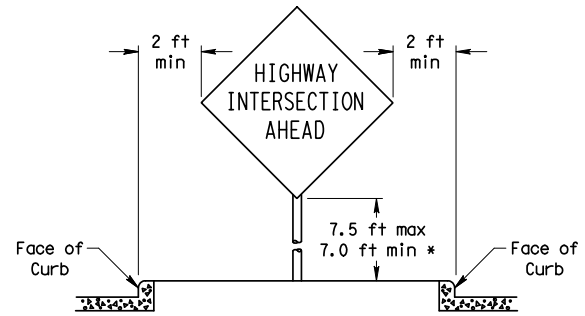

RESTRICTED RIGHT-OF-WAY

(When 6 ft min. is not possible.)

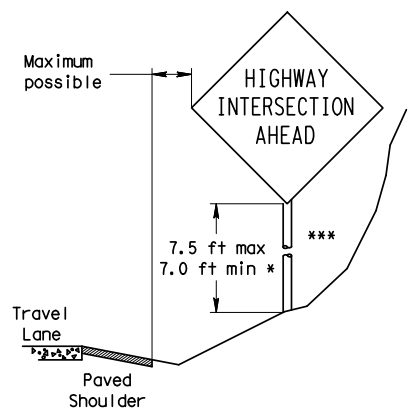

Right-of-way restrictions may be created by rocks, water, vegetation, forest, buildings, a narrow island, or other factors.

In situations where a lateral restriction prevents the minimum horizontal clearance from the edge of the travel lane, signs should be placed as far from the travel lane as practical.

*** Post may be shorter if protected by guardrail or if Engineer determines the post could not be hit due to extreme slope.

Texas Department of Transportation
Traffic Operations Division

SIGN MOUNTING DETAILS SMALL ROADSIDE SIGNS GENERAL NOTES & DETAILS

SMD(GEN)-08

©TxDOT July 2002

9-08 REVISIONS	DN: TXDOT	CK: TXDOT	DW: TXDOT	CK: TXDOT
	CONT	SECT	JOB	HIGHWAY
	DIST	COUNTY		SHEET NO.
				108 OF 152

DATE:
FILE:

26A

DISCLAIMER:
The use of this standard is governed by the "Texas Engineering Practice Act". No warranty of any kind is made by TxDOT for any purpose whatsoever. TxDOT assumes no responsibility for the conversion of this standard to other formats or for incorrect results or damages resulting from its use.

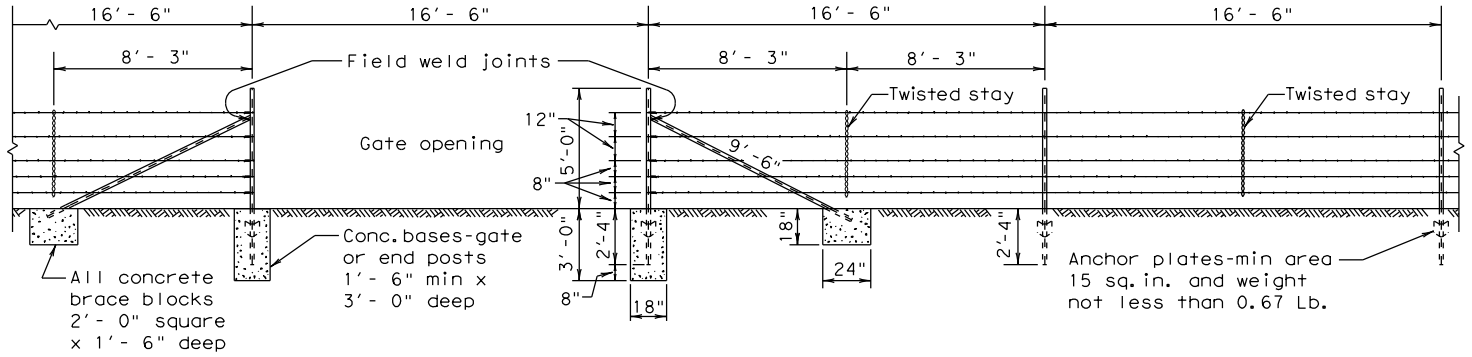

SECTION GALVANIZED BARBED WIRE FENCE WITH METAL POSTS

BRACING DETAIL USED AT ENDS AND GATES

TYPE "C" FENCE

(See General Note 8)

Note:
For Steel pipe and T-Post requirements. (See General Notes 6 & 7)

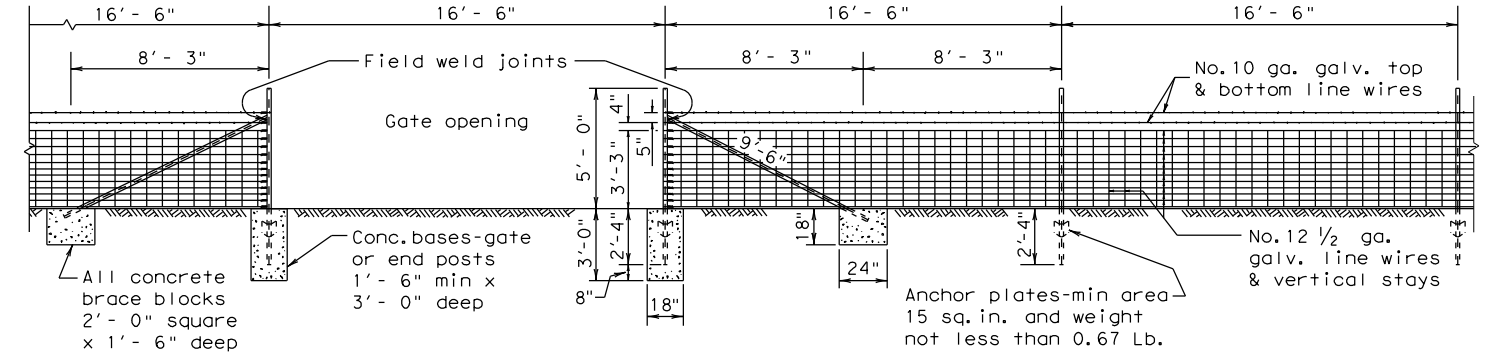

SECTION GALVANIZED WOVEN WIRE FENCE WITH METAL POSTS

BRACING DETAIL USED AT ENDS AND GATES

TYPE "D" FENCE

(See General Note 8)

Metal gate shall consist of 5 panels not less than 4′- 4" high and shall be aluminum or galvanized metal and of good quality. Gate and hardware shall meet the approval of the engineer.

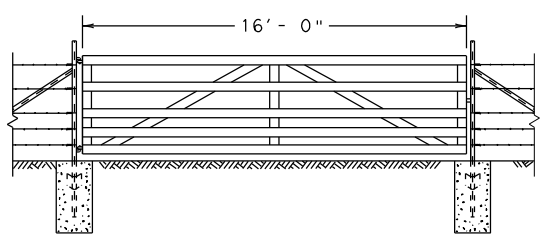

DETAIL TYPE 1 GATE

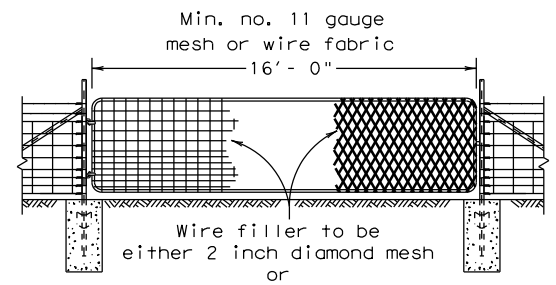

DETAIL TYPE 2 GATE

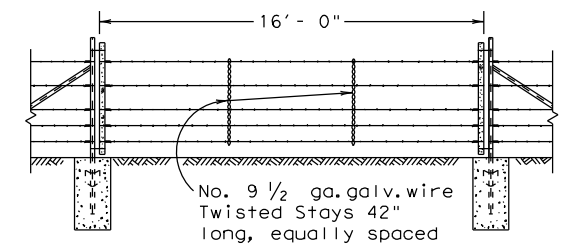

DETAIL TYPE 3 GATE

GENERAL NOTES

1. Any high point which interferes with the placing of wire mesh shall be excavated to provide a 2 inch clearance.
2. Latches for Type 1 and Type 2 gates shall be good commercial quality and design latch of the spring, fork or chain type. All latches shall be suitable to the gate and shall be approved by the Engineer.
3. Hinges for Type 2 gates shall be a commercial design approved by the Engineer suitable for post and gate.
4. Concrete shall be of the design and consistency approved by the Engineer and shall contain not less than 4 sacks of cement per cubic yard. Concrete footings are to be crowned at the top to shed water.
5. Steel anchor plates shall be of a design and thickness sufficient to prevent turning of the post in firm soil.
6. Steel pipe end posts, corner and pull posts shall be a minimum of 2" Std. pipe (2.375" O.D., 0.154" wall thickness) with a 1¼" Std. pipe brace (1.660" O.D., 0.140" wall thickness), with a 2"x2"x1/4" angle, or other as approved by the Engineer. Fasteners for securing barbed wire or woven wire fence to metal posts shall be a minimum of 11 gauge galvanized steel wire. Tubular posts shall be fitted with water malleable iron caps.
7. If Steel pipe is used for posts and braces, use standard pipe in accordance with ASTM A 53, Class B or A 501. For T-Posts use steel that meets ASTM A 702. Metal line posts shall be not less than 6′-6" in length and shall weigh not less than (1.33 lbs./lin.ft.). These Items shall be in accordance with Item 552, "Wire Fence."
8. Barbed Wire shall be in accordance with ASTM A 121, Class 1 Design designation 12-2-4-1 4R or 12-2-5-1 4R, or as approved by the Engineer.

   Woven Wire Fence (Type D) shall be in accordance with ASTM A 116, Class 1 No. 12-1/2 Grade 60 (See Table 1 ASTM A 116) to the height and design shown on the plans, or as approved by the Engineer.
9. The location of gates and corner posts will be as indicated elsewhere in these plans.

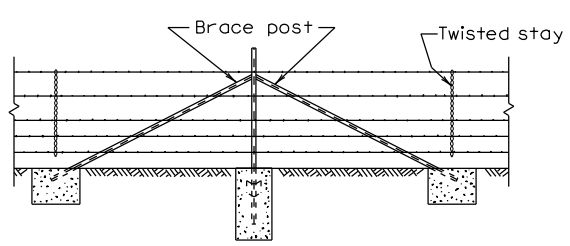

CORNER OR PULL POST ASSEMBLY

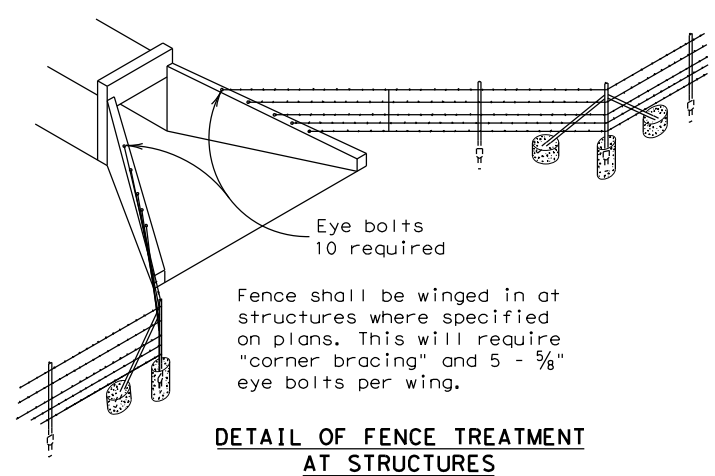

DETAIL OF FENCE TREATMENT AT STRUCTURES

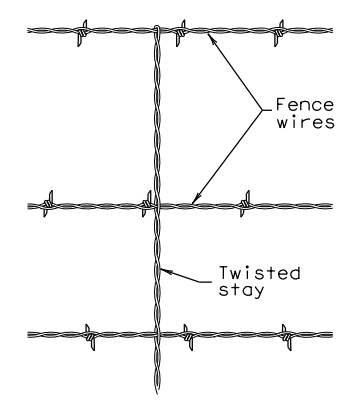

DETAIL OF STAY

(Barbed Wire Fence)

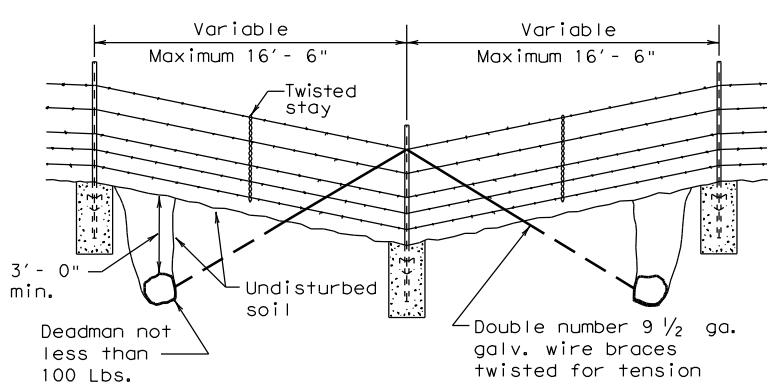

DETAIL OF FENCE SAG

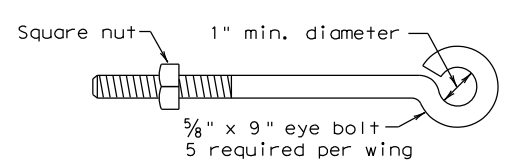

DETAIL OF EYE BOLT

Texas Department of Transportation — Design Division Standard

BARBED WIRE AND WOVEN WIRE FENCE (STEEL POSTS)

WF (2) - 10

FILE: wf210.dgn	DN: TxDOT	CK: AM	DW: VP	CK:
© TxDOT 1996	CONT	SECT	JOB	HIGHWAY
REVISIONS				
	DIST	COUNTY		SHEET NO.
				109 OF 152

DATE:
FILE:

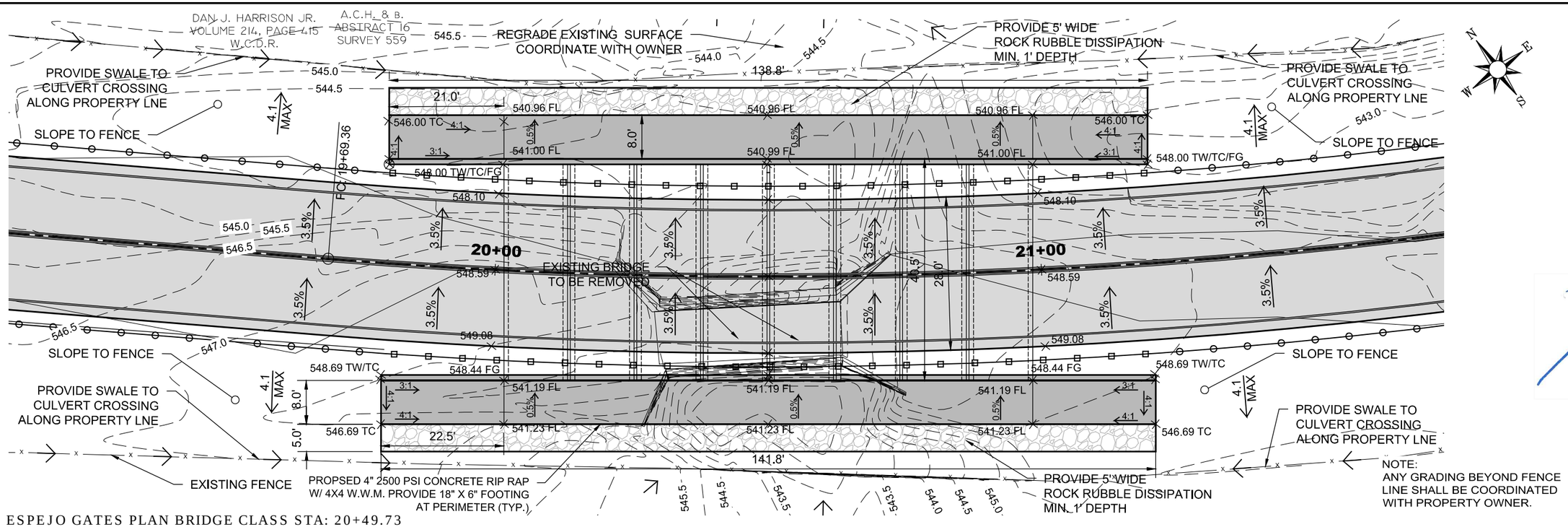

ESPEJO GATES PLAN BRIDGE CLASS STA: 20+49.73

SCALE: 1" = 20'

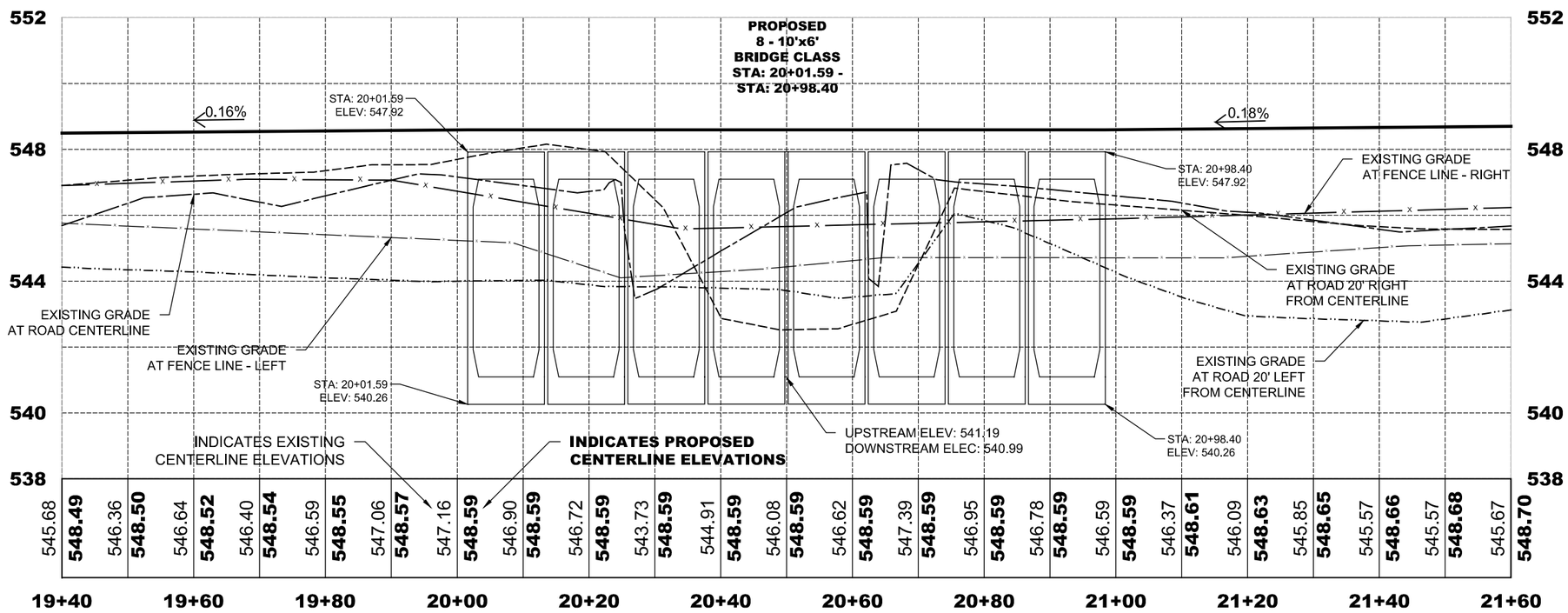

ESPEJO GATES PROFILE BRIDGE CLASS STA: 20+49.73

HORIZONTAL SCALE: 1" = 20'

VERTICAL SCALE: 1" = 4'

NO.	DATE	REVISION DESCRIPTION
1	---	---
2	---	---

PLOTTED 6-6-2016

STATUS FINAL

STATE OF TEXAS
FRANCISCO RAMOS
108833
PROFESSIONAL LICENSED ENGINEER

DRAWN BY O.C. CHECKED BY J.A.M.

6/6/2016

S&B INFRASTRUCTURE, LTD.
2120 BLAINE ST. LAREDO, TEXAS 78043
TELEPHONE: (956) 568-2561 FAX: (956) 994-0022
ENGINEERING # F-1582 SURVEYING # 10193914

ESPEJO GATES
WEBB COUNTY, TEXAS

ESPEJO GATES
BRIDGE CLASS
STA 20+49.73
DETAILED GRADING

REFERENCE FILE NAME -

DRAWING FILE NAME U2338-MBC-1-STA 20+49.73 ALIGN

SHEET NUMBER 110 OF 152

L:\PROJECTS\WEBB COUNTY\U2338\Webb County TXDOT CERTEZ\dwg\DETAILED CULVERTS SHEETS\U2338-MBC-1-STA 20+49.73 ALIGN.dwg

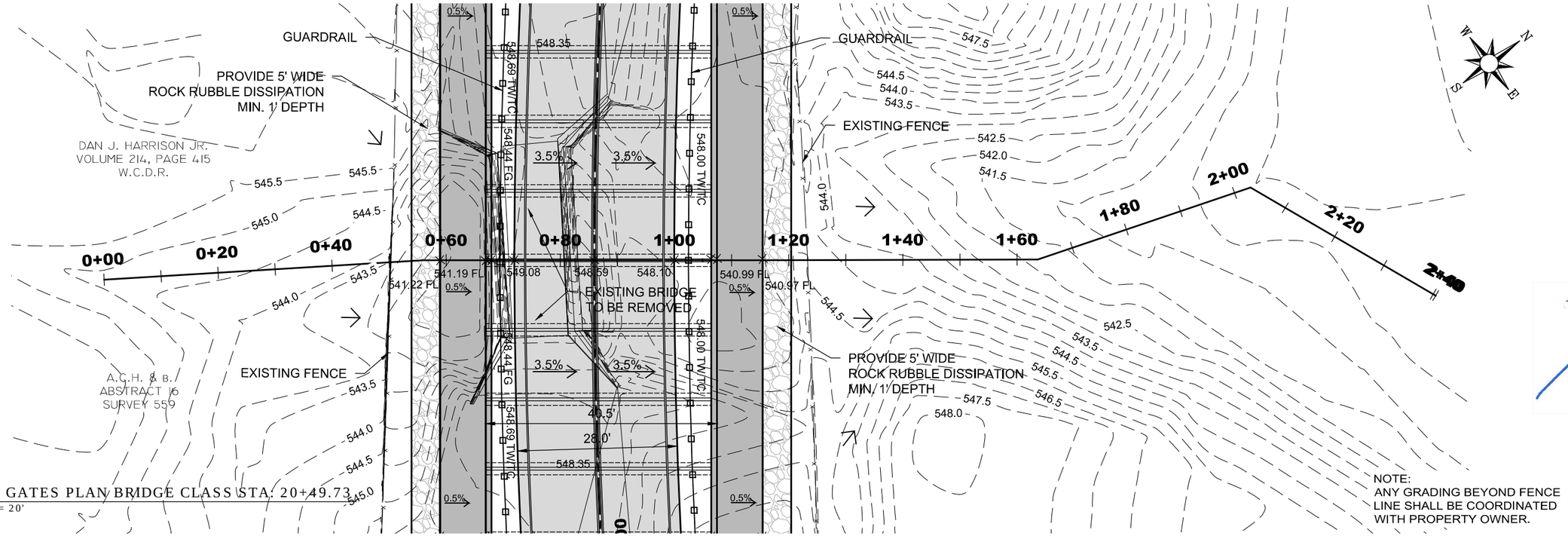

ESPEJO GATES PLAN BRIDGE CLASS STA: 20+49.73

SCALE: 1" = 20'

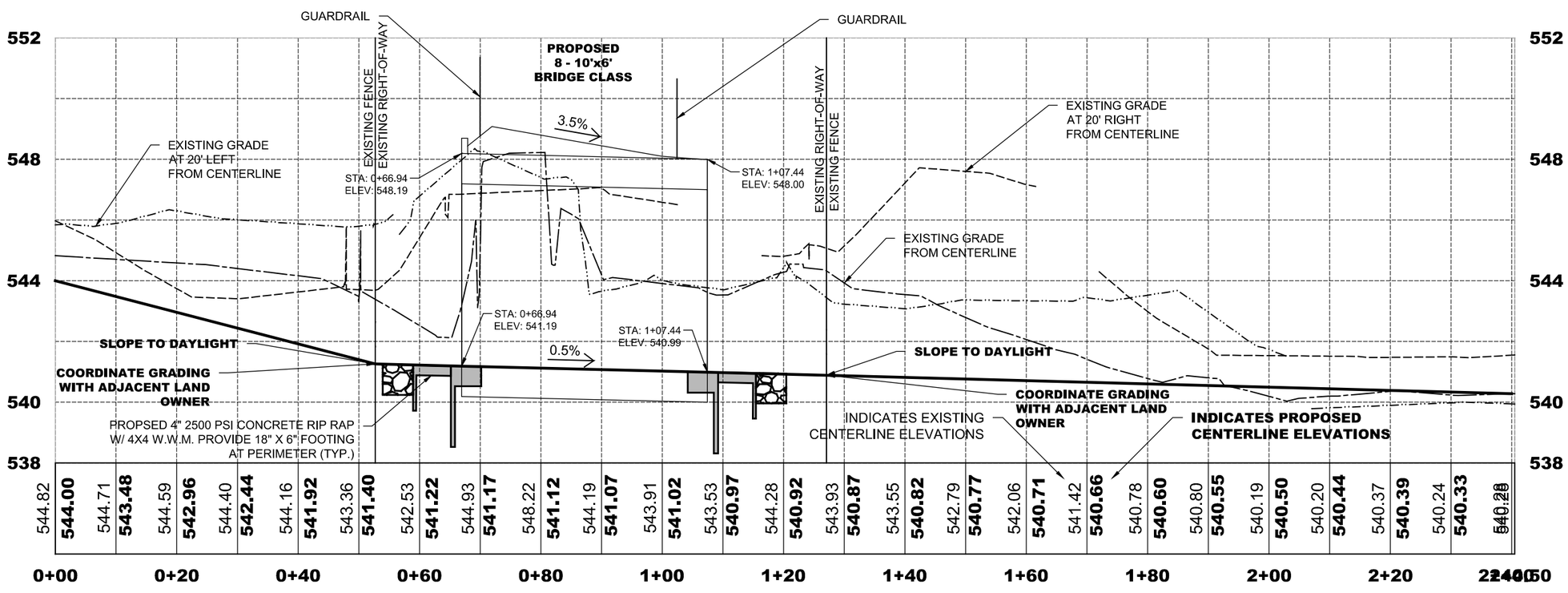

ESPEJO GATES PROFILE BRIDGE STA 20+49.73

HORIZONTAL SCALE: 1" = 20'

VERTICAL SCALE: 1" = 4'

NO.	DATE	DESCRIPTION
1	---	---
2	---	---

PLOTTED 6-6-2016

STATUS FINAL

STATE OF TEXAS
FRANCISCO RAMOS
108833
LICENSED PROFESSIONAL ENGINEER

DRAWN BY O.C. CHECKED BY J.A.M.

6/6/2016

S&B INFRASTRUCTURE, LTD.
2120 BLAINE ST. LAREDO, TEXAS 78043
TELEPHONE: (956) 568-2561 FAX: (956) 994-0227
ENGINEERING # F-1582 SURVEYING # 10193914

ESPEJO GATES
WEBB COUNTY, TEXAS

ESPEJO GATES
BRIDGE CLASS
STA: 20+49.73
DETAILED GRADING

REFERENCE FILE NAME -

DRAWING FILE NAME U2338-MBC-1-STA 20+49.73 ALIGN

SHEET NUMBER 111 OF 152

L:\PROJECTS\WEBB COUNTY\U2338\Webb County TXDOT CERTE2\dwg\DETAILED CULVERTS SHEETS\U2338-MBC-1-STA 20+49.73 ALIGN.dwg

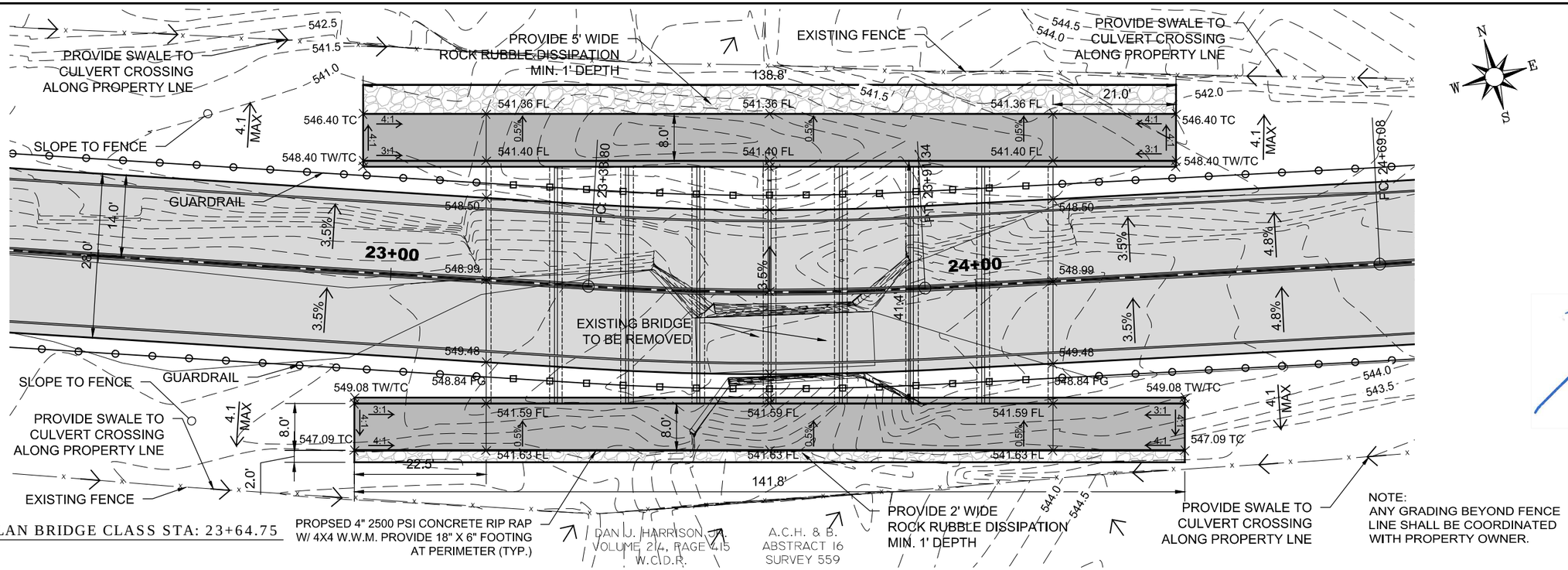

ESPEJO GATES PLAN BRIDGE CLASS STA: 23+64.75

SCALE: 1" = 20'

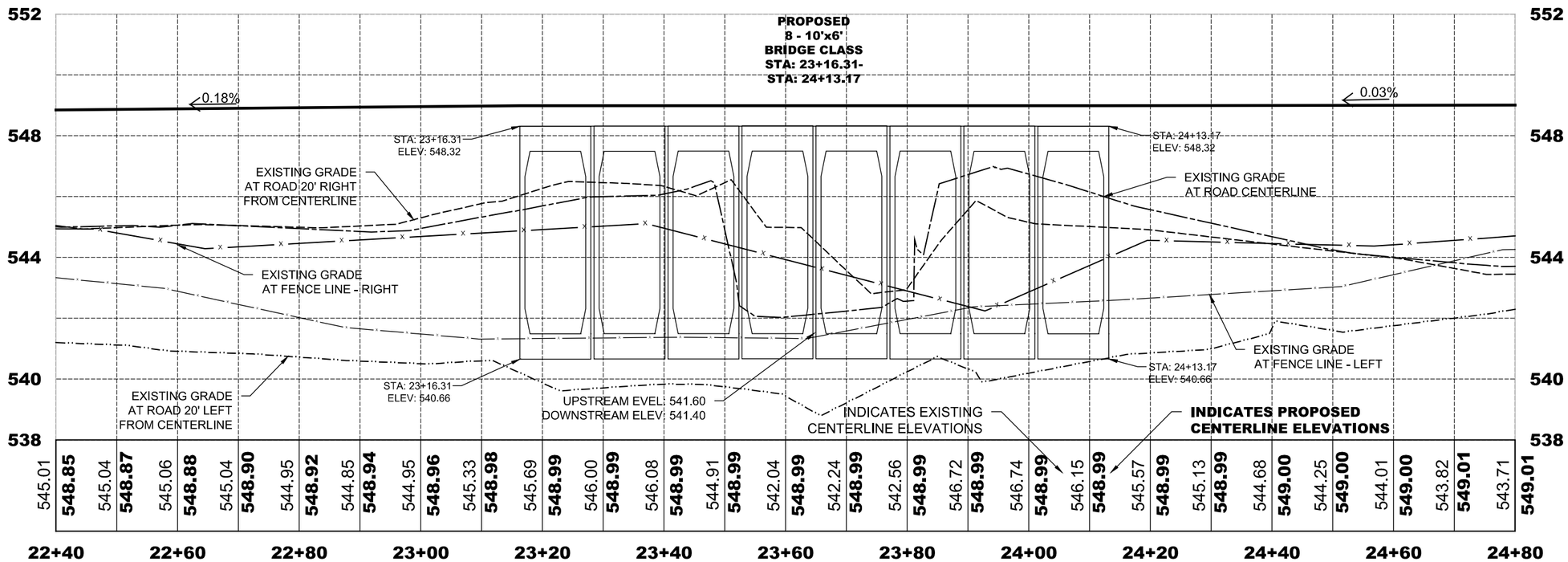

ESPEJO GATES PROFILE BRIDGE CLASS STA: 23+64.75

HORIZONTAL SCALE: 1" = 20'

VERTICAL SCALE: 1" = 4'

NO.	DATE	DESCRIPTION
1	---	---
2	---	---

REVISION

PLOTTED 6-6-2016

STATUS FINAL

STATE OF TEXAS
FRANCISCO RAMOS
108833
LICENSED PROFESSIONAL ENGINEER

DRAWN BY O.C. CHECKED BY J.A.M.

6/6/2016

S&B INFRASTRUCTURE, LTD.
2120 BLAINE ST. LAREDO, TEXAS 78043
TELEPHONE: (956) 568-2561 FAX: (956) 994-0047
ENGINEERING # F-1582 SURVEYING # 10193914

ESPEJO GATES
WEBB COUNTY, TEXAS

ESPEJO GATES
BRIDGE CLASS
STA 23+64.75
DETAILED GRADING

REFERENCE FILE NAME -

DRAWING FILE NAME U2338-MBC-2-STA 23+64.75 ALIGN

L:\PROJECTS\WEBB COUNTY\U2338\Webb County TXDOT CERTEZ\dwg\DETAILED CULVERTS SHEETS\U2338-MBC-2-STA 23+64.75 ALIGN.dwg

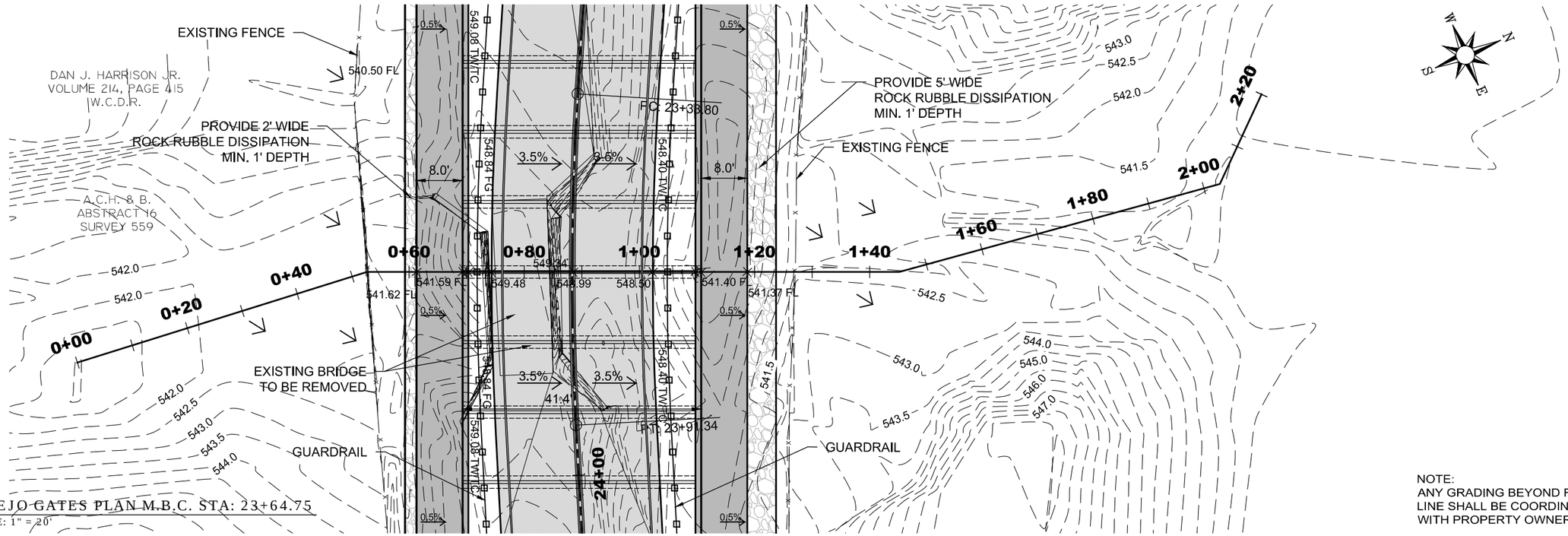

ESPEJO GATES PLAN M.B.C. STA: 23+64.75

SCALE: 1" = 20'

NOTE:
ANY GRADING BEYOND FENCE LINE SHALL BE COORDINATED WITH PROPERTY OWNER.

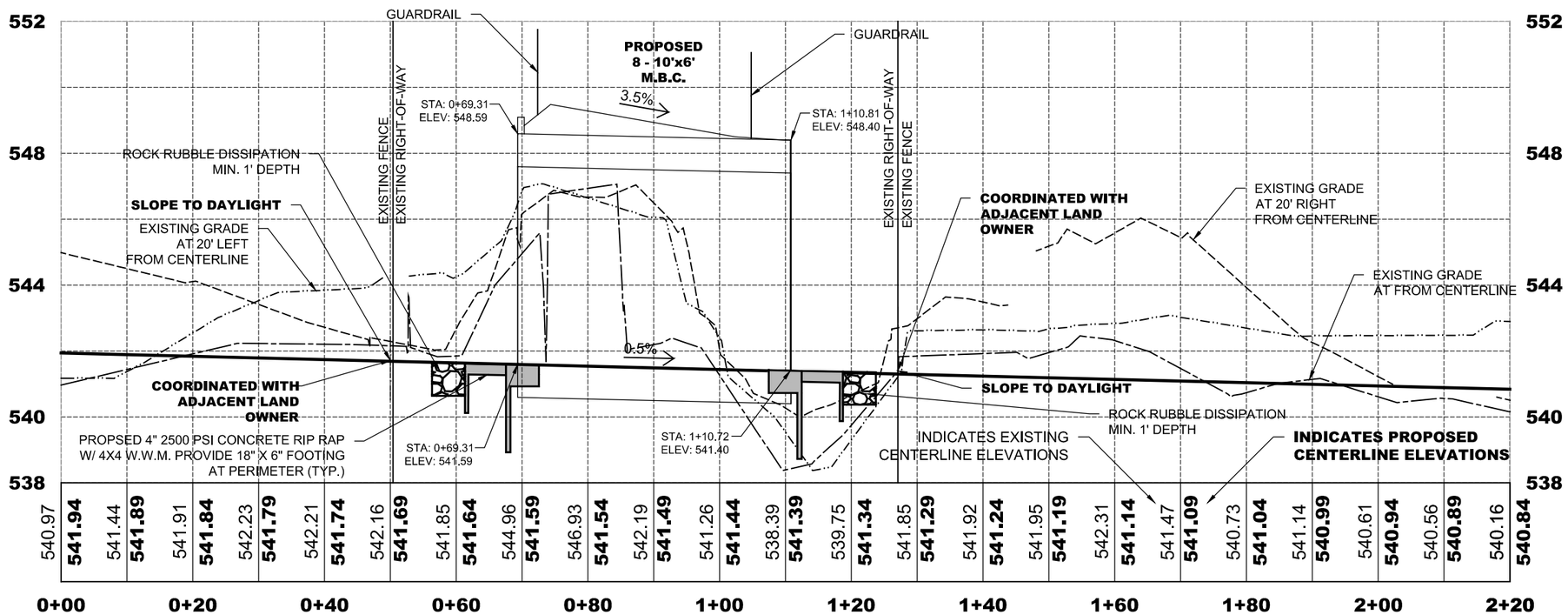

ESPEJO GATES PROFILE M.B.C. STA: 23+64.75

HORIZONTAL SCALE: 1" = 20'

VERTICAL SCALE: 1" = 4'

NO.	DATE	DESCRIPTION
1	---	---
2	---	---

PLOTTED 6-6-2016

STATUS FINAL

STATE OF TEXAS
FRANCISCO RAMOS
108833
LICENSED PROFESSIONAL ENGINEER

DRAWN BY O.C. CHECKED BY J.A.M.

6/6/2016

S&B INFRASTRUCTURE, LTD.
2120 BLAINE ST. LAREDO, TEXAS 78043
TELEPHONE: (956) 568-2561 FAX: (956) 994-0027
ENGINEERING # F-1582 SURVEYING # 10193914

ESPEJO GATES
WEBB COUNTY, TEXAS

ESPEJO GATES
M.B.C.
STA: 23+64.75
DETAILED GRADING

REFERENCE FILE NAME
-
DRAWING FILE NAME
U2338-MBC-2-STA 23+64.75 ALIGN

L:\PROJECTS\WEBB COUNTY\U2338\Webb County TXDOT CERTEZ\dwg\DETAILED CULVERTS SHEETS\U2338-MBC-2-STA 23+64.75 ALIGN.dwg

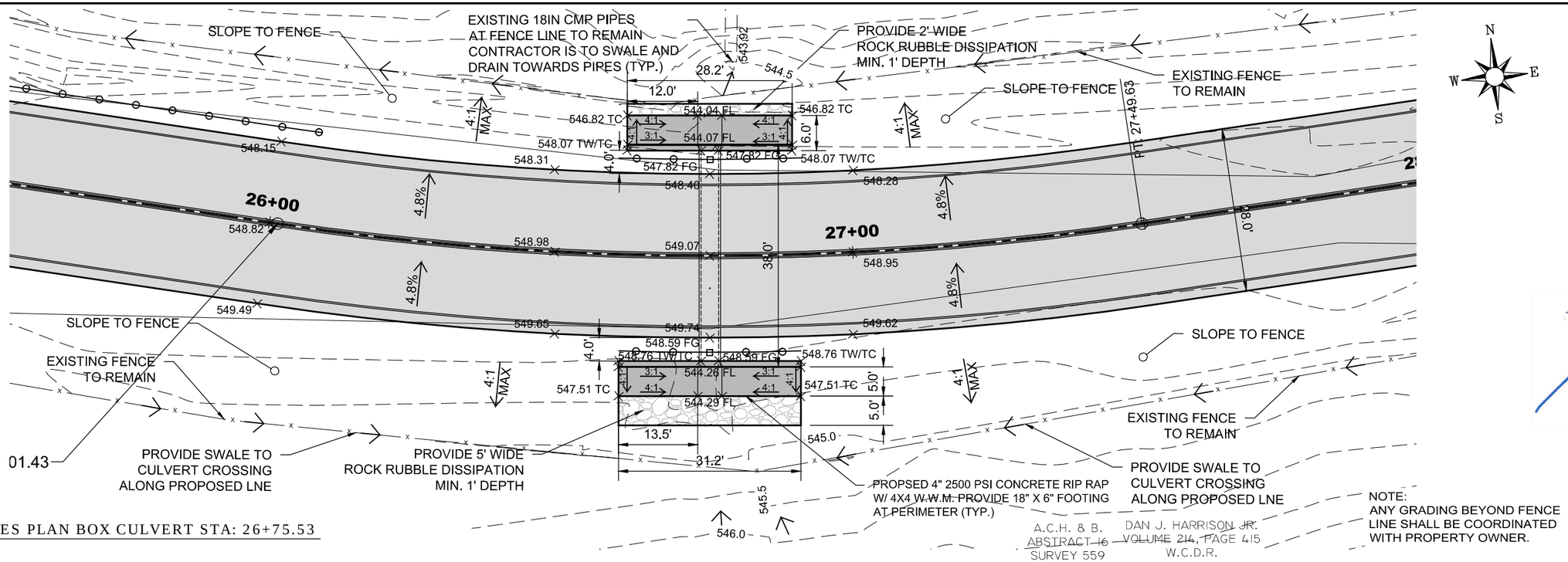

NOTE:
ANY GRADING BEYOND FENCE LINE SHALL BE COORDINATED WITH PROPERTY OWNER.

ESPEJO GATES PLAN BOX CULVERT STA: 26+75.53
SCALE: 1" = 20'

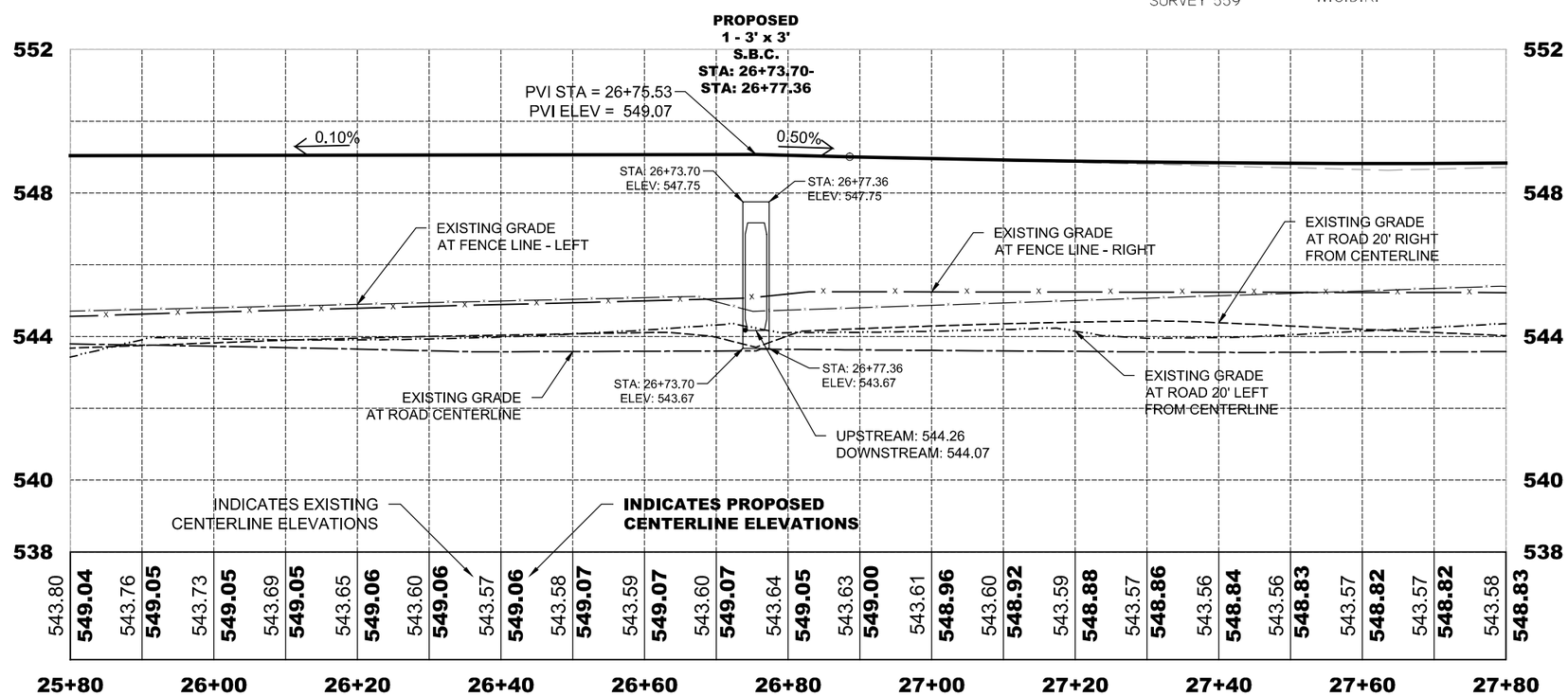

ESPEJO GATES PROFILE BOX CULVERT STA: 26+75.53
HORIZONTAL SCALE: 1" = 20'
VERTICAL SCALE: 1" = 4'

NO.	DATE	REVISION DESCRIPTION
1	---	---
2	---	---

PLOTTED 6-6-2016
STATUS FINAL

STATE OF TEXAS
FRANCISCO RAMOS
108833
LICENSED PROFESSIONAL ENGINEER

DRAWN BY O.C. CHECKED BY J.A.M.

6/6/2016

S&B INFRASTRUCTURE, LTD.
2120 BLAINE ST. LAREDO, TEXAS 78043
TELEPHONE: (956) 568-2561 FAX: (956) 994-0022
ENGINEERING # F-1582 SURVEYING # 10193914

ESPEJO GATES
WEBB COUNTY, TEXAS

ESPEJO GATES
BOX CULVERT
STA 26+75.53
DETAILED GRADING

REFERENCE FILE NAME -
DRAWING FILE NAME U2338-MBC-3-STA 26+75.53 ALIGN

L:\PROJECTS\WEBB COUNTY\U2338\Webb County TXDOT CERTEZ\dwg\DETAILED CULVERTS SHEETS\U2338-MBC-3-STA 26+75.53 ALIGN.dwg

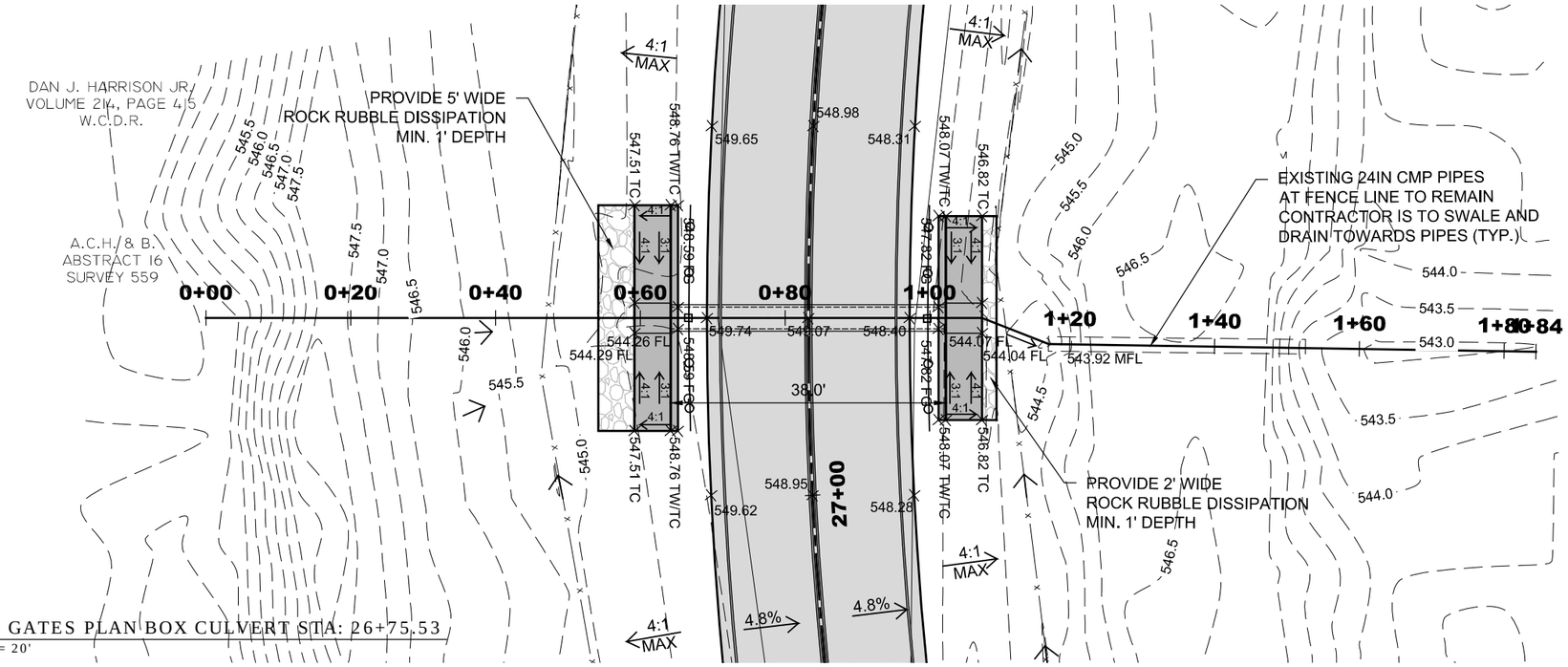

ESPEJO GATES PLAN BOX CULVERT STA: 26+75.53

SCALE: 1" = 20'

NOTE:
ANY GRADING BEYOND FENCE LINE SHALL BE COORDINATED WITH PROPERTY OWNER.

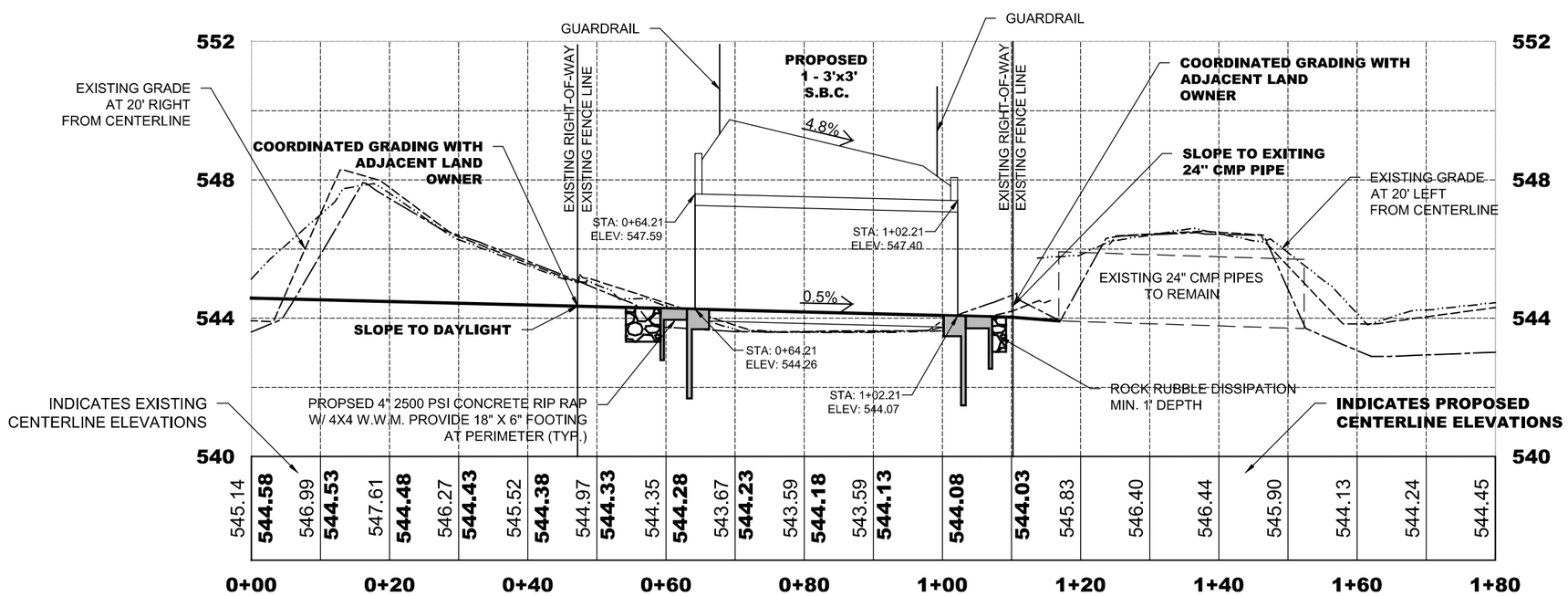

ESPEJO GATES PROFILE BOX CULVERT STA: 26+75.53

HORIZONTAL SCALE: 1" = 20'

VERTICAL SCALE: 1" = 4'

NO.	DATE	REVISION DESCRIPTION
1	---	---
2	---	---

PLOTTED 6-6-2016

STATUS FINAL

STATE OF TEXAS
FRANCISCO RAMOS
108833
PROFESSIONAL LICENSED ENGINEER

DRAWN BY O.C. CHECKED BY J.A.M.

6/6/2016

S&B INFRASTRUCTURE, LTD.
2120 BLAINE ST. LAREDO, TEXAS 78043
TELEPHONE: (956) 568-2561 FAX: (956) 994-0025
ENGINEERING # F-1582 SURVEYING # 10193914

ESPEJO GATES
WEBB COUNTY, TEXAS

ESPEJO GATES
BOX CULVERT
STA: 26+75.53
DETAILED GRADING

REFERENCE FILE NAME
-
DRAWING FILE NAME
U2338-MBC-3-STA 26+75.53 ALIGN

L:\PROJECTS\WEBB COUNTY\U2338\Webb County TXDOT CERTEZ\dwg\DETAILED CULVERTS SHEETS\U2338-MBC-3-STA 26+75.53 ALIGN.dwg

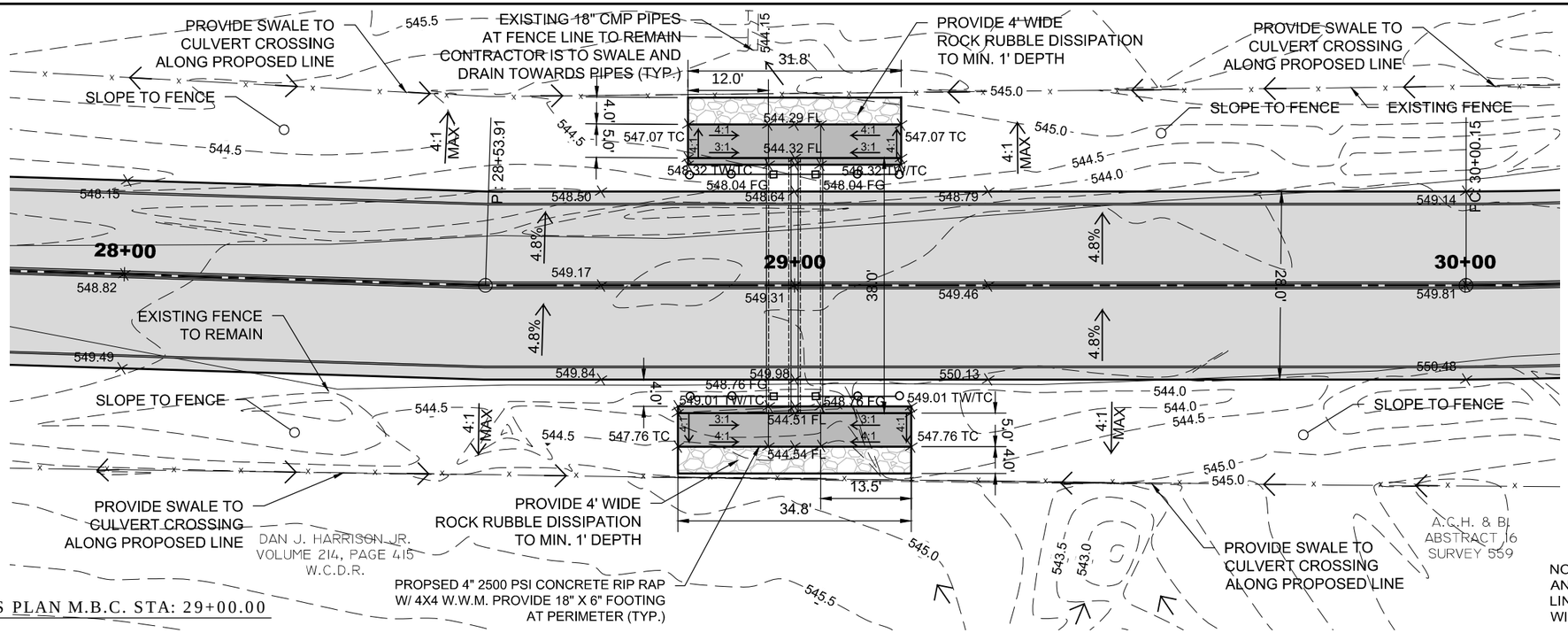

NOTE:
ANY GRADING BEYOND FENCE LINE SHALL BE COORDINATED WITH PROPERTY OWNER.

ESPEJO GATES PLAN M.B.C. STA: 29+00.00
SCALE: 1" = 20'

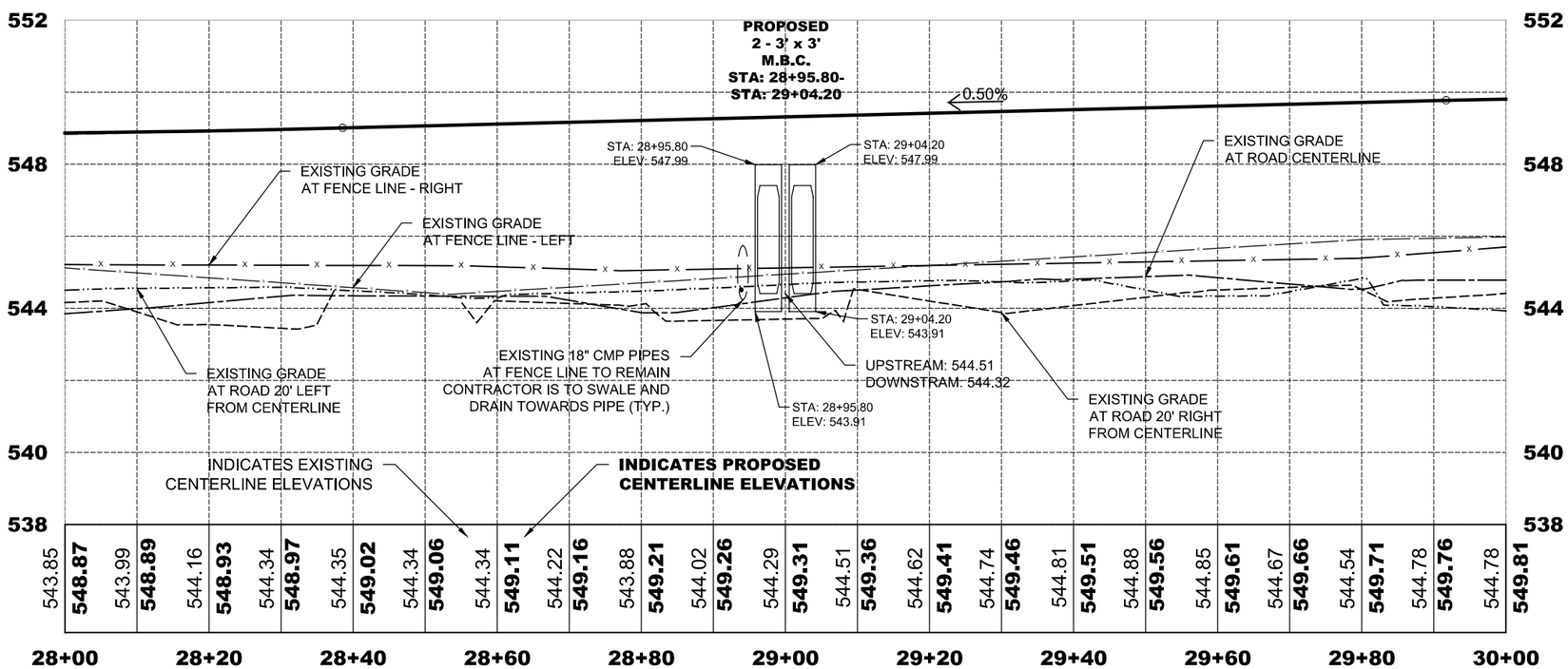

ESPEJO GATES PROFILE M.B.C. STA: 29+00.00
HORIZONTAL SCALE: 1" = 20'
VERTICAL SCALE: 1" = 4'

NO.	DATE	DESCRIPTION
1	---	---
2	---	---

REVISION

PLOTTED 6-6-2016

STATUS FINAL

STATE OF TEXAS
FRANCISCO RAMOS
108833
LICENSED PROFESSIONAL ENGINEER

DRAWN BY O.C. CHECKED BY J.A.M.

6/6/2016

S&B INFRASTRUCTURE, LTD.
2120 BLAINE ST. LAREDO, TEXAS 78043
TELEPHONE: (956) 568-2561 FAX: (956) 994-0027
ENGINEERING # F-1582 SURVEYING # 10193914

ESPEJO GATES
WEBB COUNTY, TEXAS

ESPEJO GATES
M.B.C.
STA 29+00.00
DETAILED GRADING

REFERENCE FILE NAME -
DRAWING FILE NAME U2338-MBC-4-STA 29+00 ALIGN

L:\PROJECTS\WEBB COUNTY\U2338\Webb County TXDOT CERTEZ\dwg\DETAILED CULVERTS SHEETS\U2338-MBC-4-STA 29+00 ALIGN.dwg

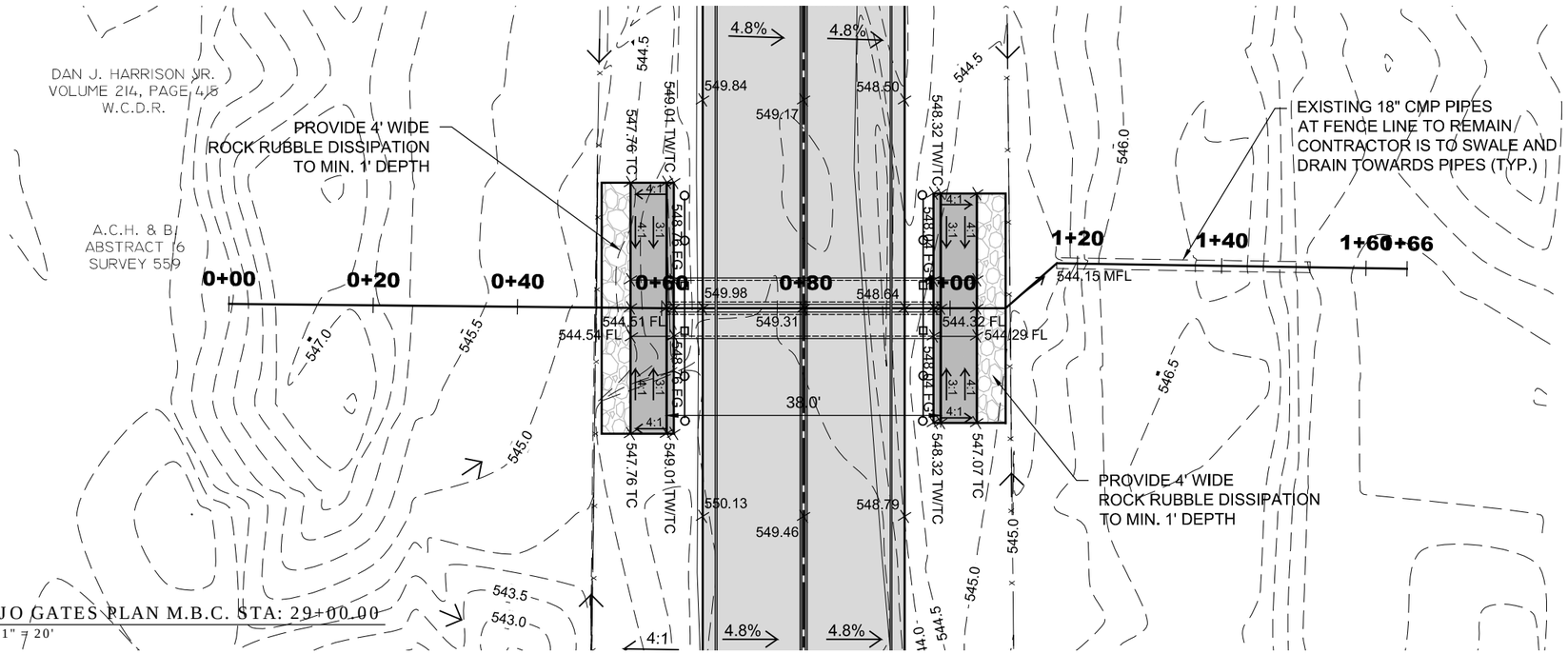

ESPEJO GATES PLAN M.B.C. STA: 29+00.00

SCALE: 1" = 20'

NOTE:
ANY GRADING BEYOND FENCE LINE SHALL BE COORDINATED WITH PROPERTY OWNER.

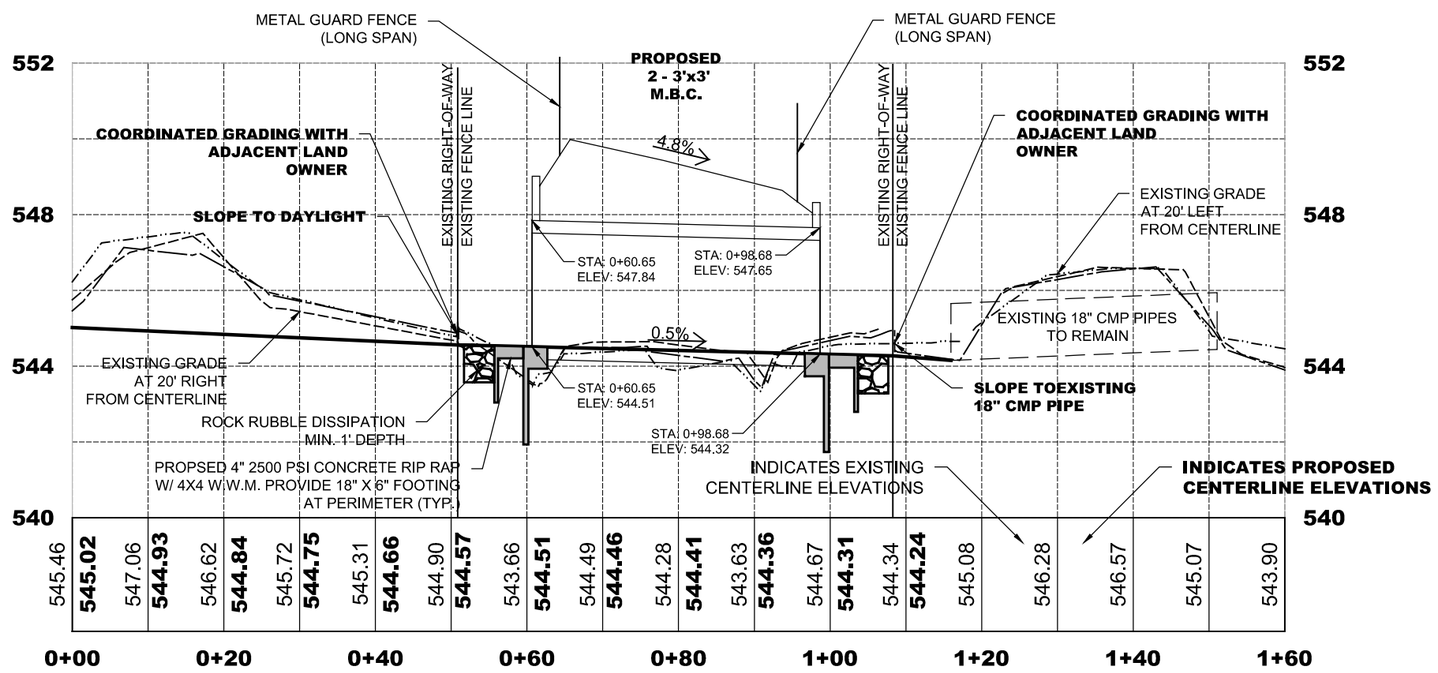

ESPEJO GATES PROFILE M.B.C. STA: 29+00.00

HORIZONTAL SCALE: 1" = 20'

VERTICAL SCALE: 1" = 4'

NO.	DATE	DESCRIPTION
1	---	---
2	---	---

PLOTTED 6-6-2016

STATUS FINAL

STATE OF TEXAS
FRANCISCO RAMOS
108833
PROFESSIONAL LICENSED ENGINEER

DRAWN BY O.C. CHECKED BY J.A.M.

6/6/2016

S&B INFRASTRUCTURE, LTD.
2120 BLAINE ST. LAREDO, TEXAS 78043
TELEPHONE: (956) 568-2561 FAX: (956) 994-0022
ENGINEERING # F-1582 SURVEYING # 10193914

ESPEJO GATES
WEBB COUNTY, TEXAS

ESPEJO GATES
M.B.C.
STA: 29+00.00
DETAILED GRADING

REFERENCE FILE NAME
-
DRAWING FILE NAME
U2338-MBC-4-STA 29+00 ALIGN

SHEET NUMBER 117 OF 152

L:\PROJECTS\WEBB COUNTY\U2338\Webb County TXDOT CERTEZ\dwg\DETAILED CULVERTS SHEETS\U2338-MBC-4-STA 29+00 ALIGN.dwg

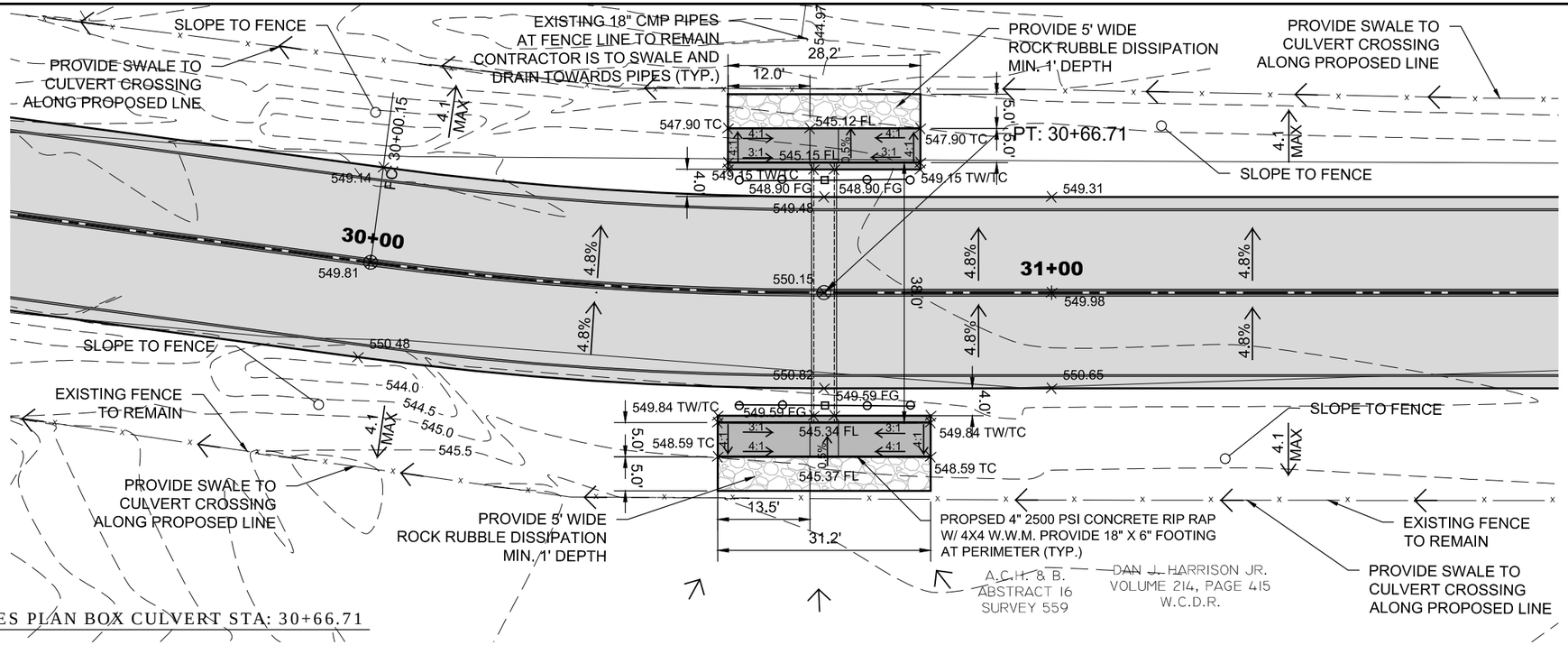

ESPEJO GATES PLAN BOX CULVERT STA: 30+66.71
SCALE: 1" = 20'

NOTE:
ANY GRADING BEYOND FENCE LINE SHALL BE COORDINATED WITH PROPERTY OWNER.

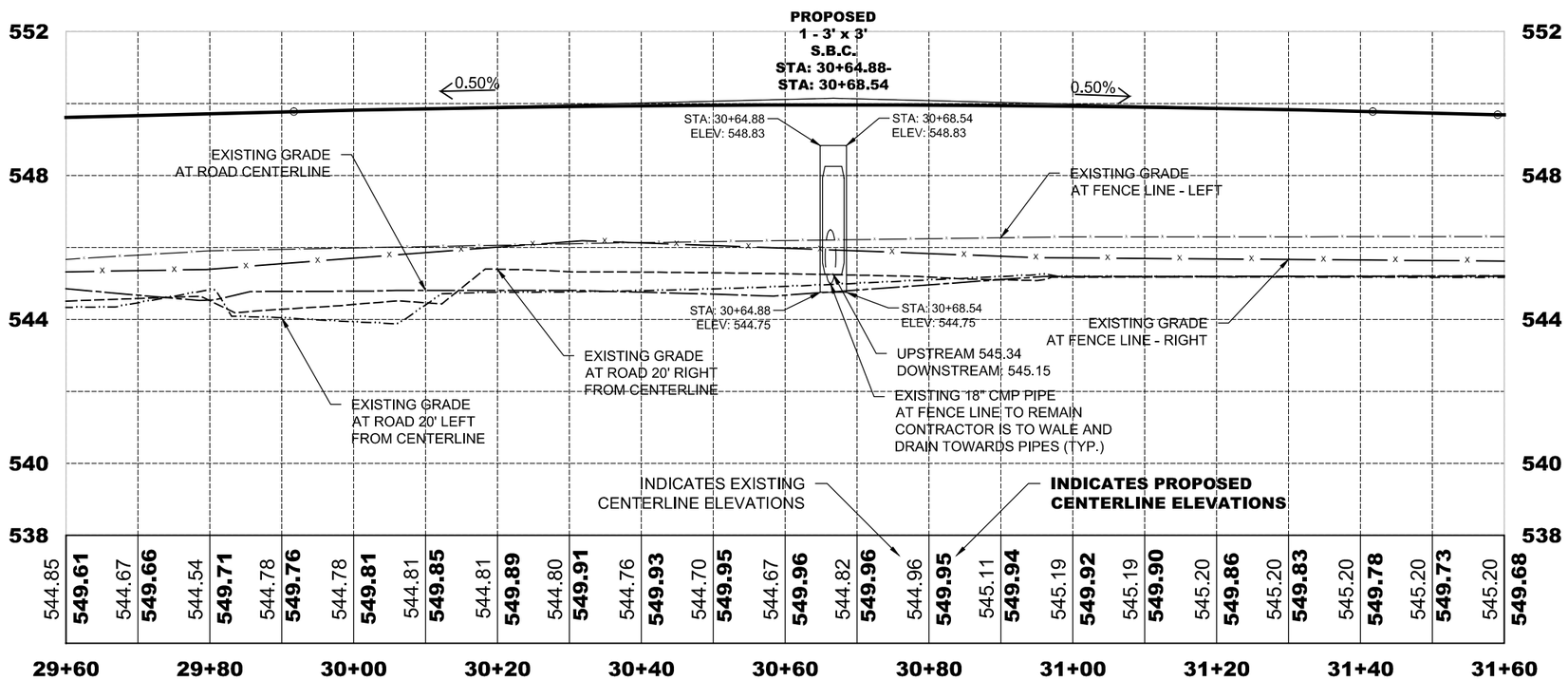

ESPEJO GATES PROFILE BOX CULVERT STA: 30+66.71
HORIZONTAL SCALE: 1" = 20'
VERTICAL SCALE: 1" = 4'

NO.	DATE	DESCRIPTION
1	---	---
2	---	---

PLOTTED 6-6-2016
STATUS FINAL

STATE OF TEXAS
FRANCISCO RAMOS
108833
LICENSED PROFESSIONAL ENGINEER

DRAWN BY O.C. CHECKED BY J.A.M.

6/6/2016

S&B INFRASTRUCTURE, LTD.
2120 BLAINE ST. LAREDO, TEXAS 78043
TELEPHONE: (956) 568-2561 FAX: (956) 994-0022
ENGINEERING # F-1582 SURVEYING # 10193914

ESPEJO GATES
WEBB COUNTY, TEXAS

ESPEJO GATES
BOX CULVERT
STA 30+66.71
DETAILED GRADING

REFERENCE FILE NAME -
DRAWING FILE NAME U2338-MBC-5-STA 30+66.71 ALIGN

L:\PROJECTS\WEBB COUNTY\U2338\Webb County TXDOT CERTEZ\dwg\DETAILED CULVERTS SHEETS\U2338-MBC-5-STA 30+66.71 ALIGN.dwg

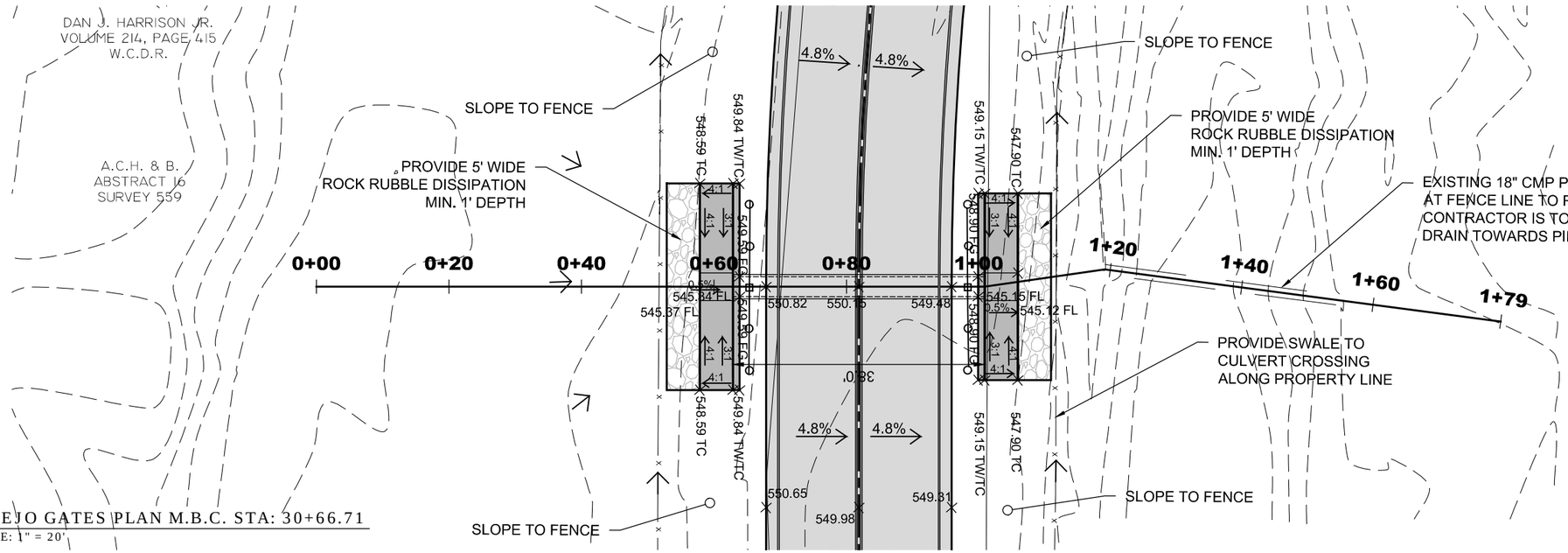

ESPEJO GATES PLAN M.B.C. STA: 30+66.71

SCALE: 1" = 20'

NOTE:
ANY GRADING BEYOND FENCE LINE SHALL BE COORDINATED WITH PROPERTY OWNER.

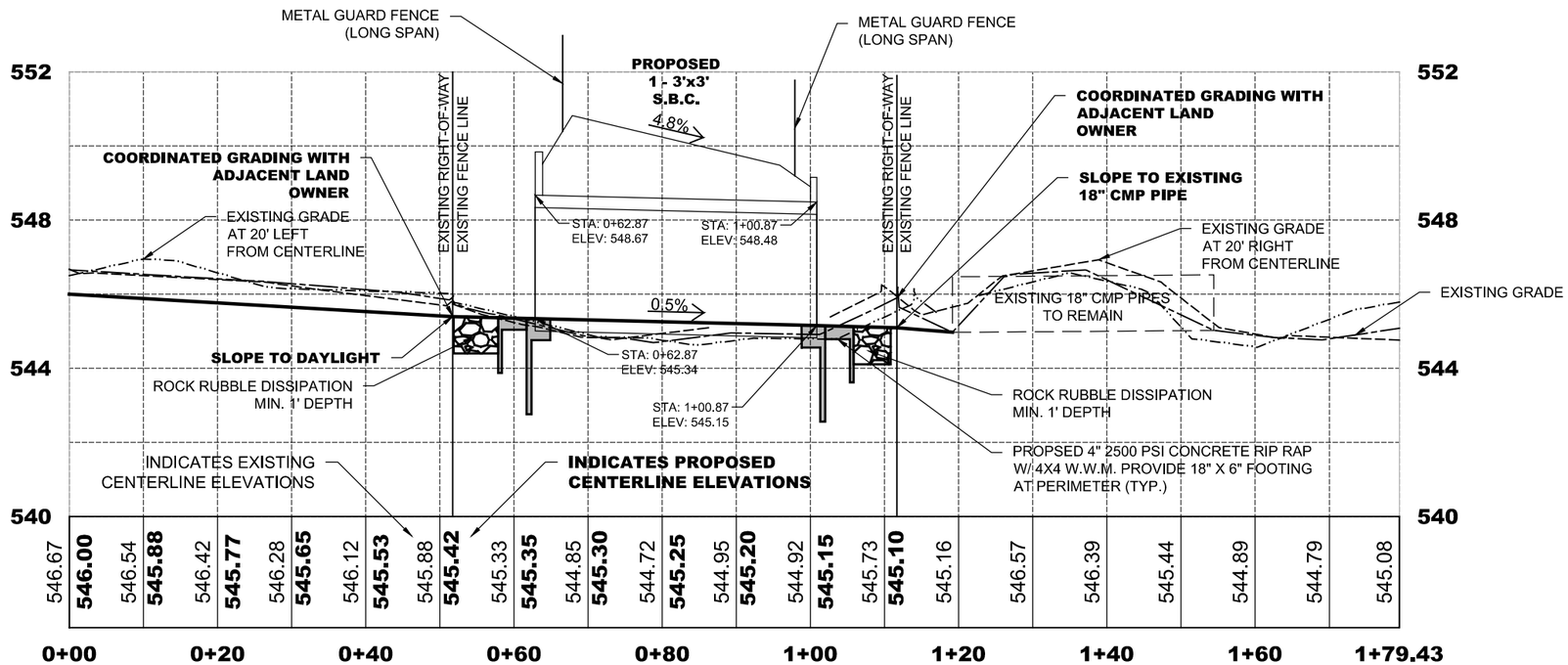

ESPEJO GATES PROFILE M.B.C. STA: 30+66.71

HORIZONTAL SCALE: 1" = 20'

VERTICAL SCALE: 1" = 4'

NO.	DATE	DESCRIPTION
1	---	---
2	---	---

PLOTTED 6-6-2016

STATUS FINAL

STATE OF TEXAS
FRANCISCO RAMOS
108833
PROFESSIONAL LICENSED ENGINEER

DRAWN BY O.C. CHECKED BY J.A.M.

6/6/2016

S&B INFRASTRUCTURE, LTD.
2120 BLAINE ST. LAREDO, TEXAS 78043
TELEPHONE: (956) 568-2561 FAX: (956) 994-0024
ENGINEERING # F-1582 SURVEYING # 10193914

ESPEJO GATES
WEBB COUNTY, TEXAS

ESPEJO GATES
M.B.C.
STA: 30+66.71
DETAILED GRADING

REFERENCE FILE NAME
-
DRAWING FILE NAME
U2338-MBC-5-STA 30+66.71 ALIGN

SHEET NUMBER 119 OF 152

L:\PROJECTS\WEBB COUNTY\U2338\Webb County TXDOT CERTEZ\dwg\DETAILED CULVERTS SHEETS\U2338-MBC-5-STA 30+66.71 ALIGN.dwg

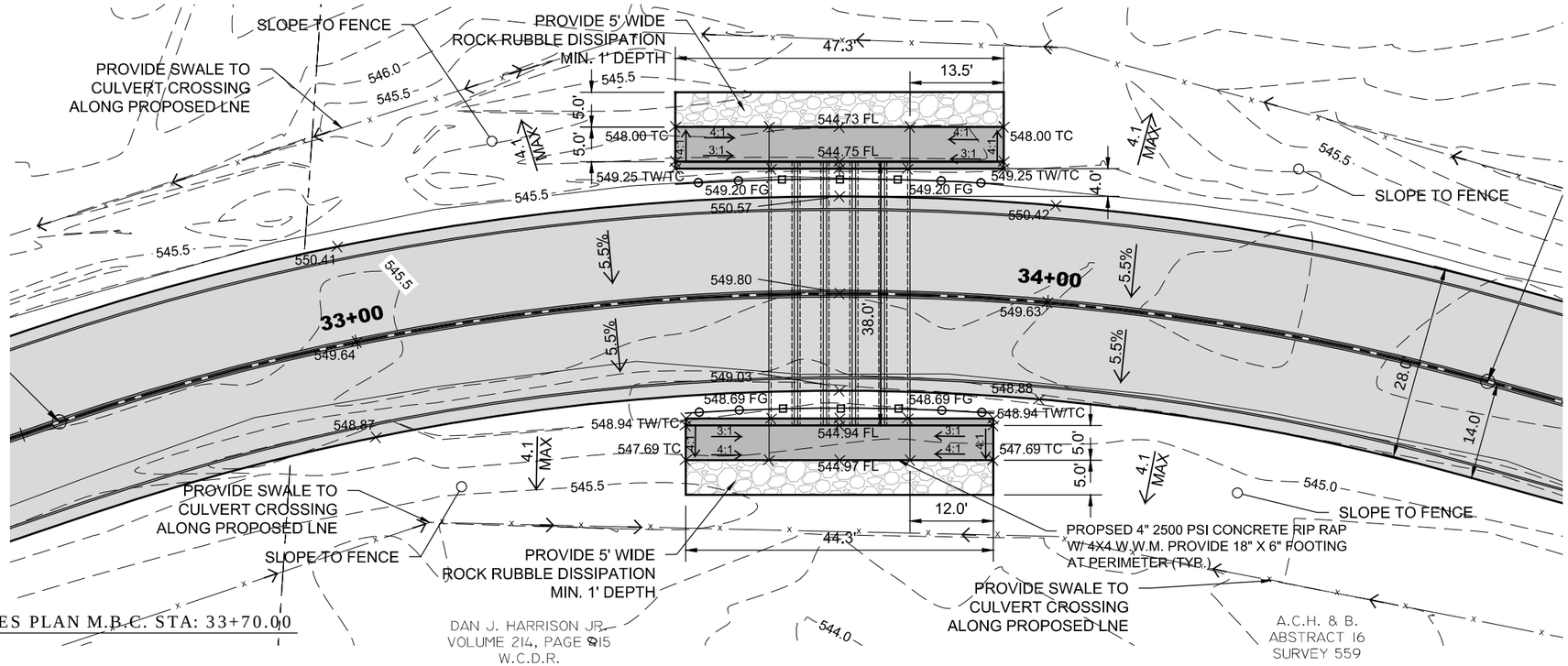

ESPEJO GATES PLAN M.B.C. STA: 33+70.00
SCALE: 1" = 20'

NOTE:
ANY GRADING BEYOND FENCE LINE SHALL BE COORDINATED WITH PROPERTY OWNER.

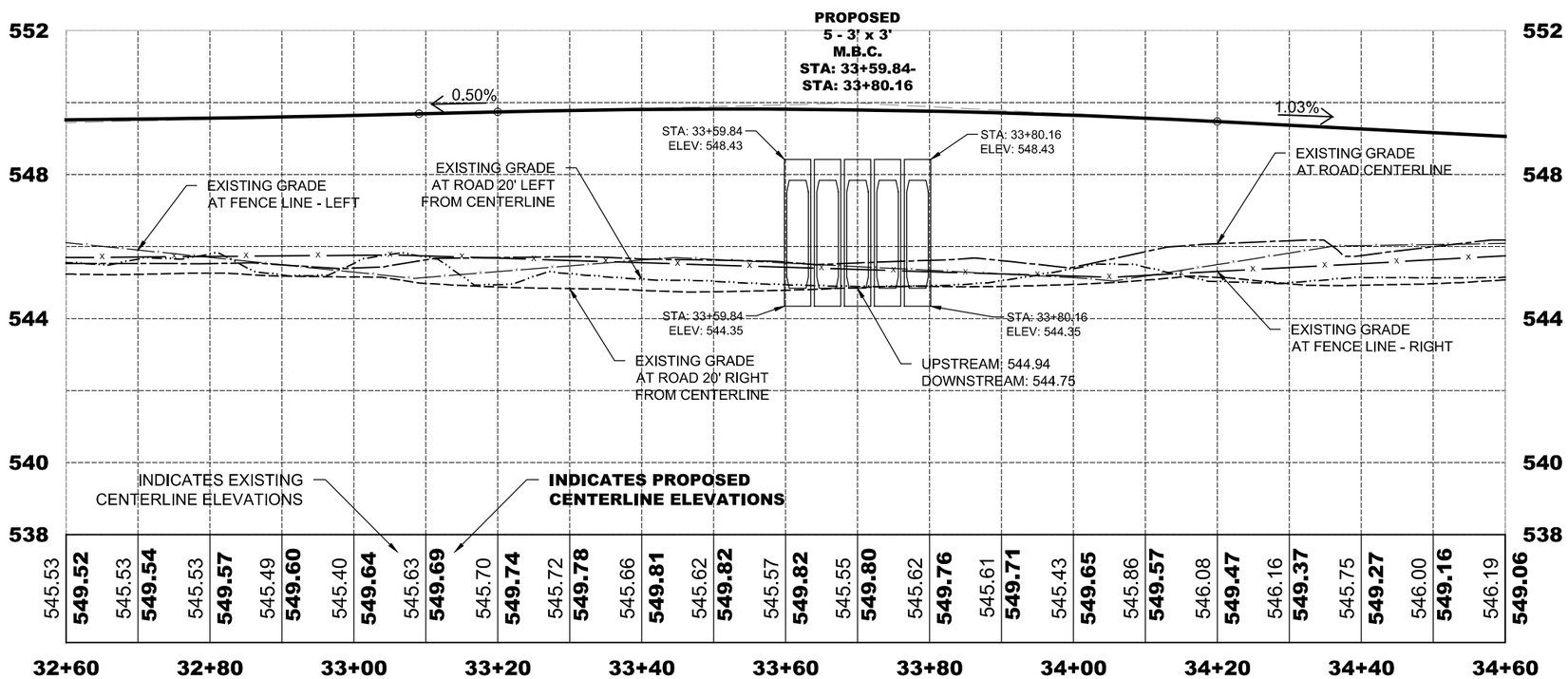

ESPEJO GATES PROFILE M.B.C. STA: 33+70.00
HORIZONTAL SCALE: 1" = 20'
VERTICAL SCALE: 1" = 4'

NO.	DATE	DESCRIPTION
1	---	---
2	---	---

PLOTTED 6-6-2016
STATUS FINAL

STATE OF TEXAS
FRANCISCO RAMOS
108833
LICENSED PROFESSIONAL ENGINEER

DRAWN BY O.C. CHECKED BY J.A.M.

6/6/2016

S&B INFRASTRUCTURE, LTD.
2120 BLAINE ST. LAREDO, TEXAS 78043
TELEPHONE: (956) 568-2561 FAX: (956) 994-0024
ENGINEERING # F-1582 SURVEYING # 10193914

ESPEJO GATES
WEBB COUNTY, TEXAS

ESPEJO GATES
M.B.C.
STA 33+70.00
DETAILED GRADING

REFERENCE FILE NAME -
DRAWING FILE NAME U2338-MBC-6-STA 33+70 ALIGN

L:\PROJECTS\WEBB COUNTY\U2338\Webb County TXDOT CERTEZ\dwg\DETAILED CULVERTS SHEETS\U2338-MBC-6-STA 33+70 ALIGN.dwg

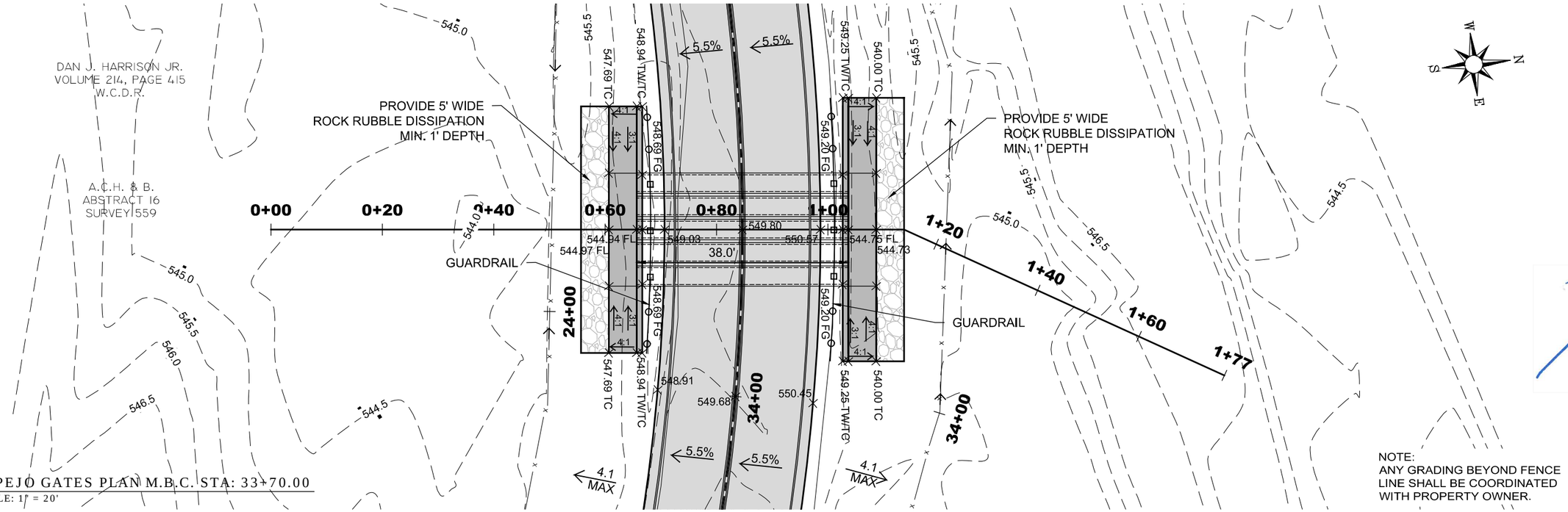

ESPEJO GATES PLAN M.B.C. STA: 33+70.00

SCALE: 1" = 20'

NOTE:
ANY GRADING BEYOND FENCE LINE SHALL BE COORDINATED WITH PROPERTY OWNER.

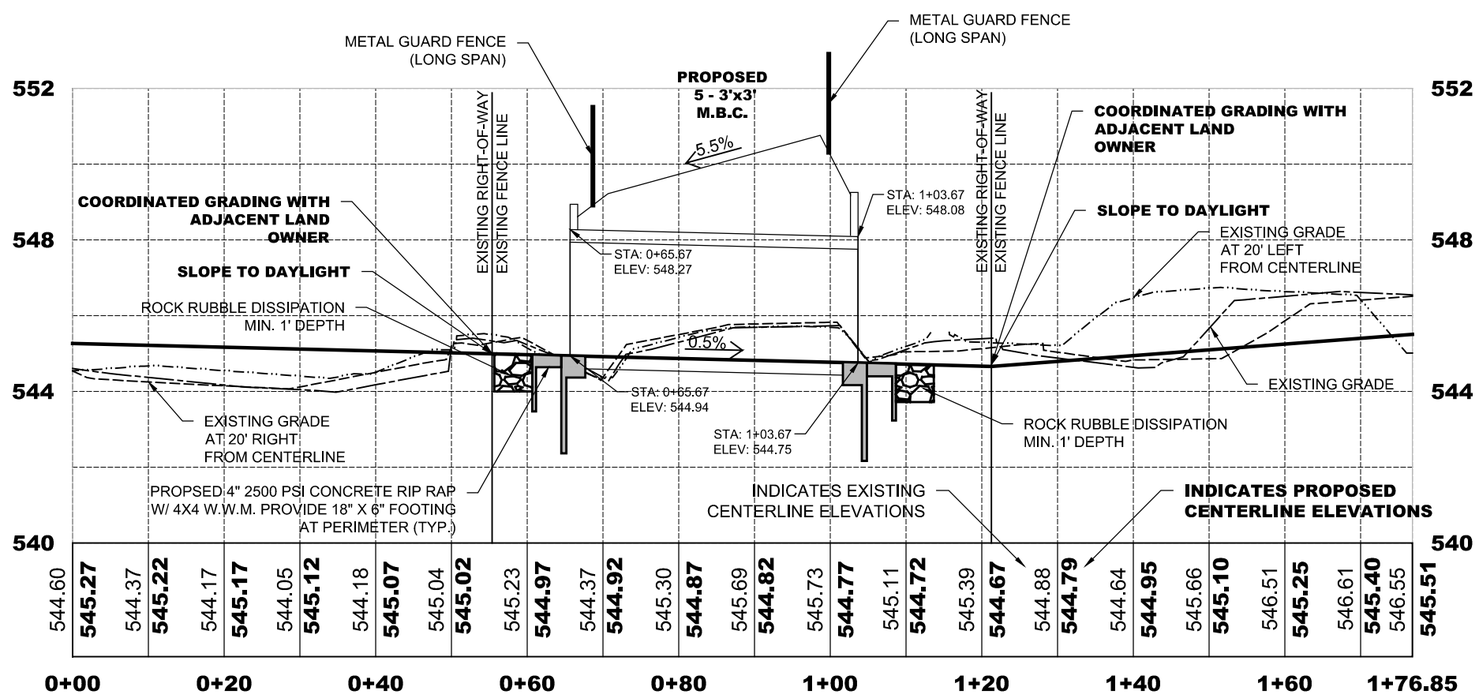

ESPEJO GATES PROFILE M.B.C. STA: 33+70.00

HORIZONTAL SCALE: 1" = 20'

VERTICAL SCALE: 1" = 4'

REVISION		
NO.	DATE	DESCRIPTION
1	---	---
2	---	---

PLOTTED 6-6-2016

STATUS FINAL

STATE OF TEXAS
FRANCISCO RAMOS
108833
LICENSED
PROFESSIONAL ENGINEER

6/6/2016

DRAWN BY O.C. CHECKED BY J.A.M.

S&B INFRASTRUCTURE, LTD.
2120 BLAINE ST. LAREDO, TEXAS 78043
TELEPHONE: (956) 568-2561 FAX: (956) 994-0027
ENGINEERING # F-1582 SURVEYING # 10193914

ESPEJO GATES
WEBB COUNTY, TEXAS

ESPEJO GATES
M.B.C.
STA: 33+70.00
DETAILED GRADING

REFERENCE FILE NAME
-
DRAWING FILE NAME
U2338-MBC-6-STA 33+70 ALIGN

SHEET NUMBER 121 OF 152

L:\PROJECTS\WEBB COUNTY\U2338\Webb County TXDOT CERTEZ\dwg\DETAILED CULVERTS SHEETS\U2338-MBC-6-STA 33+70 ALIGN.dwg

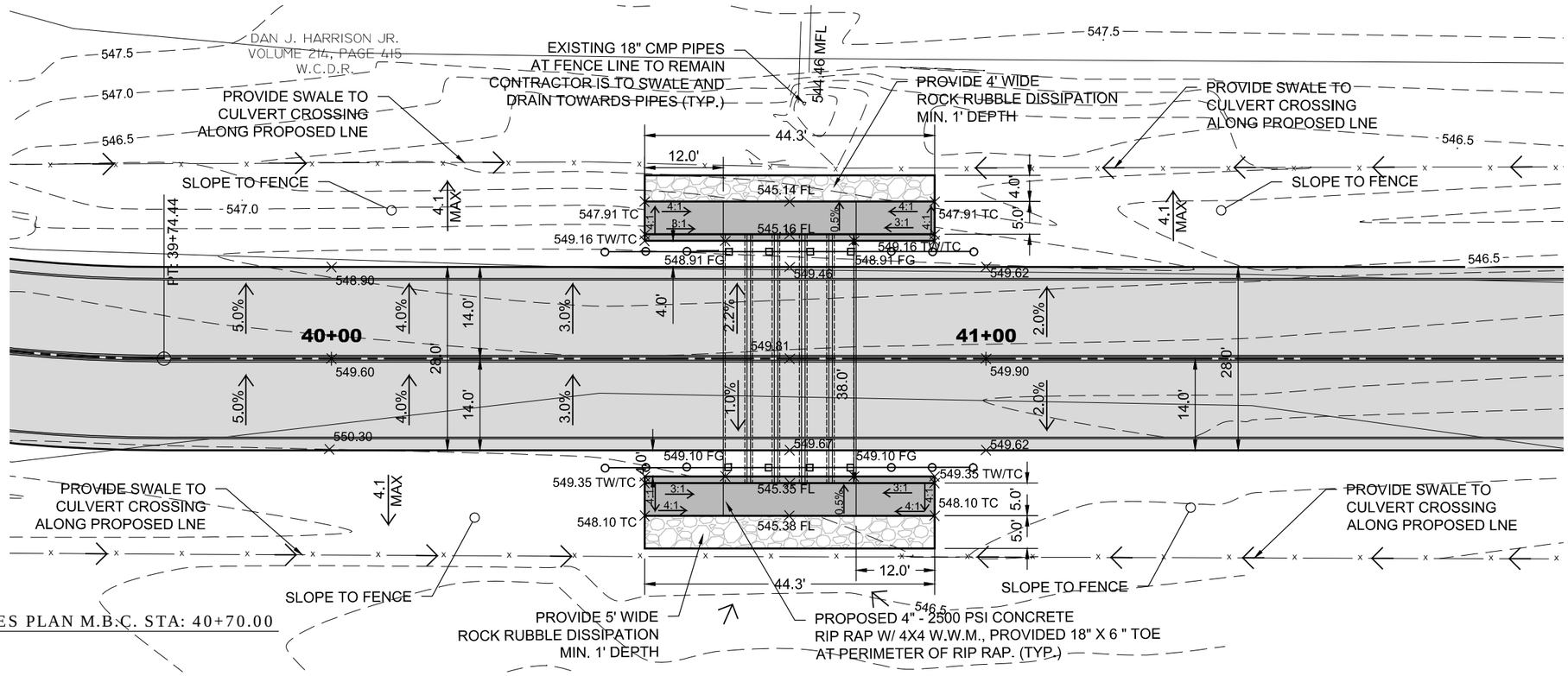

ESPEJO GATES PLAN M.B.C. STA: 40+70.00

SCALE: 1" = 20'

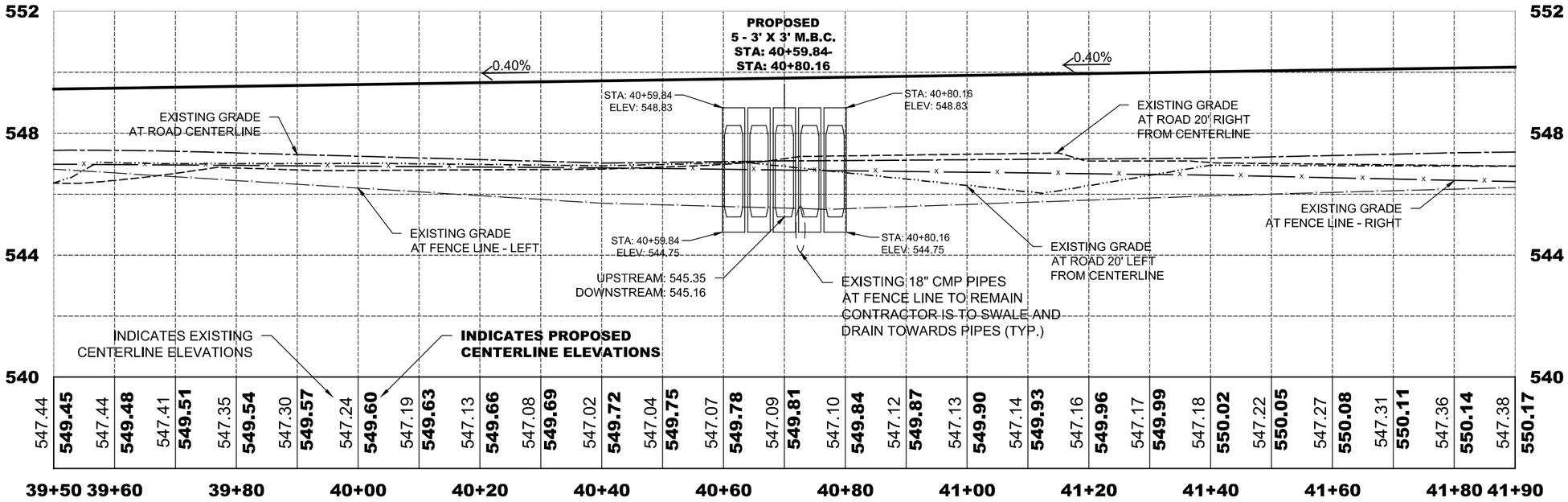

ESPEJO GATES PROFILE M.B.C. STA: 40+70.00

HORIZONTAL SCALE: 1" = 20'

VERTICAL SCALE: 1" = 4'

NO.	DATE	DESCRIPTION
1	---	---
2	---	---

REVISION

PLOTTED 6-6-2016

STATUS FINAL

STATE OF TEXAS
FRANCISCO RAMOS
108833
LICENSED
PROFESSIONAL ENGINEER

DRAWN BY O.C. CHECKED BY J.A.M.

M. & C.
ABSTRACT 243
SURVEY 566

6/6/2016

S&B INFRASTRUCTURE, LTD.
2120 BLAINE ST. LAREDO, TEXAS 78043
TELEPHONE: (956) 568-2561 FAX: (956) 994-0027
ENGINEERING # F-1582 SURVEYING # 10193914

ESPEJO GATES
WEBB COUNTY, TEXAS

ESPEJO GATES
M.B.C.
STA 40+70.00
DETAILED GRADING

REFERENCE FILE NAME
-
DRAWING FILE NAME
U2338-MBC-7-STA 40+70.00 ALIGN

L:\PROJECTS\WEBB COUNTY\U2338\Webb County TXDOT CERTE2\dwg\DETAILED CULVERTS SHEETS\U2338-MBC-7-STA 40+70.00 ALIGN.dwg

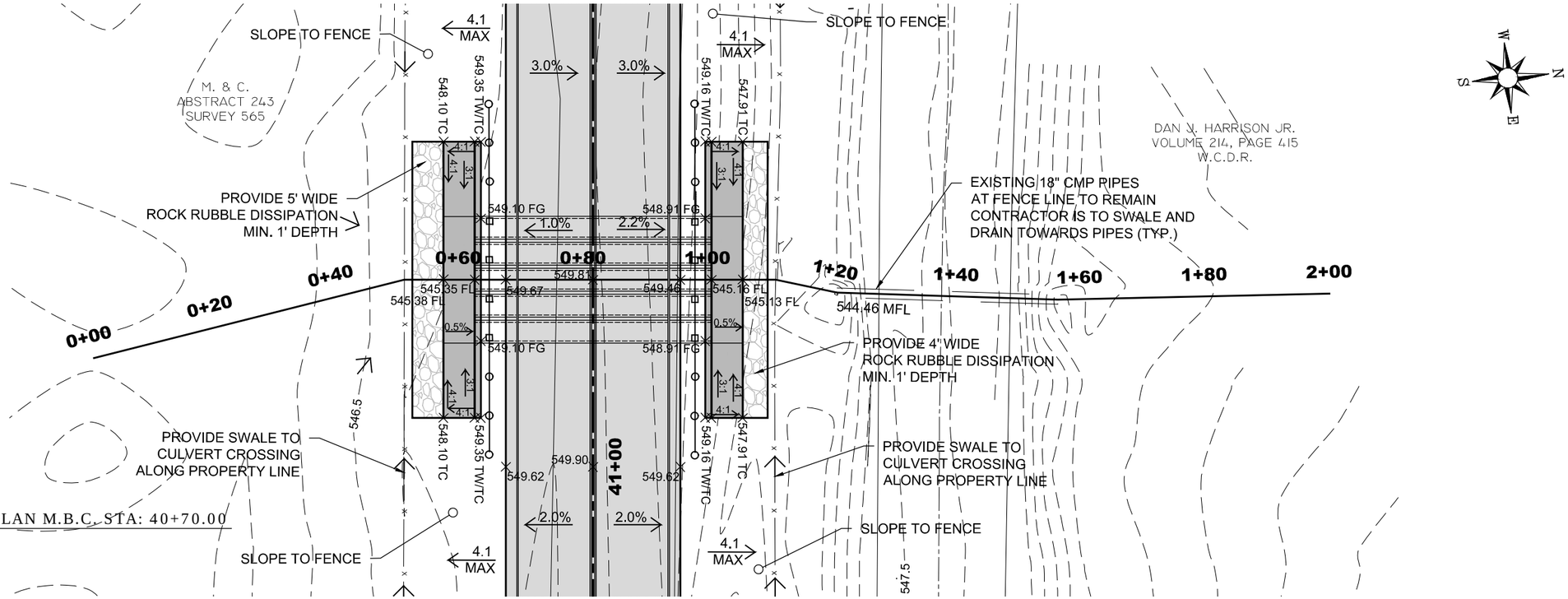

ESPEJO GATES PLAN M.B.C. STA: 40+70.00

SCALE: 1" = 20'

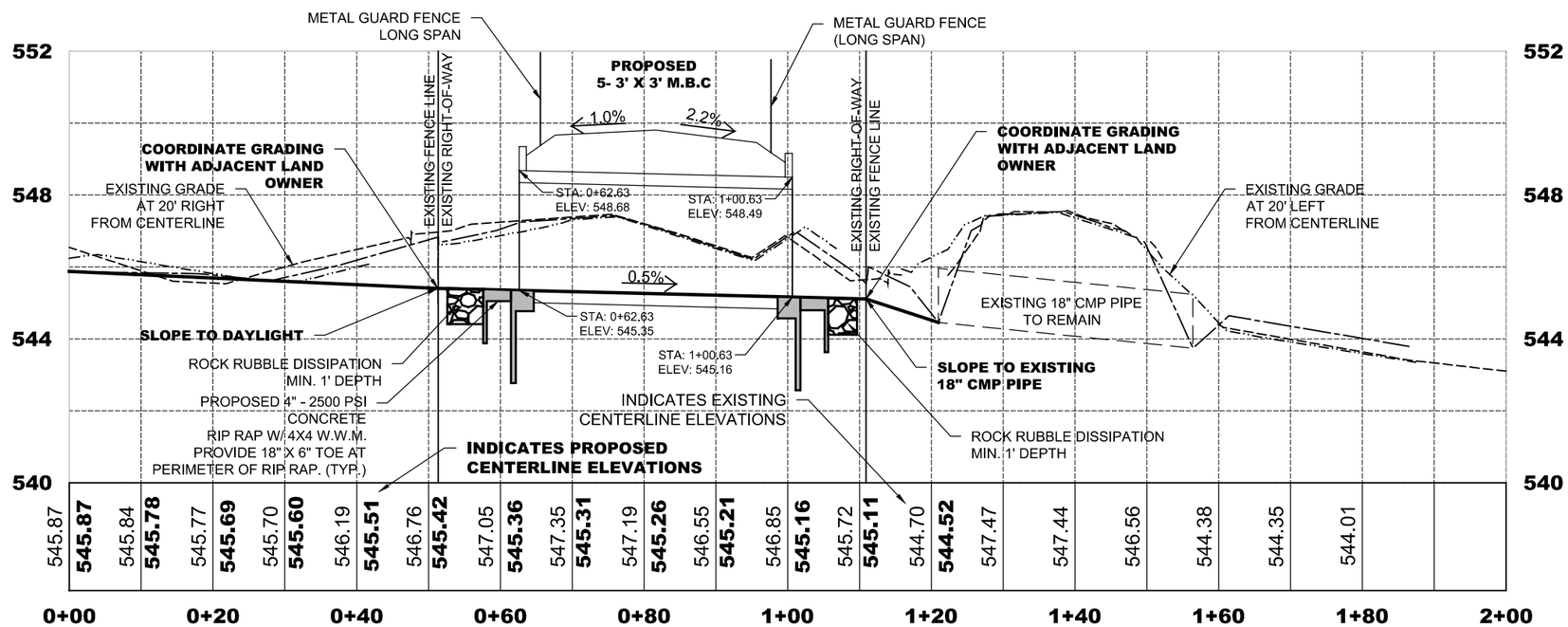

ESPEJO GATES PROFILE M.B.C. STA: 40+70.00

HORIZONTAL SCALE: 1" = 20'

VERTICAL SCALE: 1" = 4'

NO.	DATE	DESCRIPTION
1	---	---
2	---	---

PLOTTED 6-6-2016

STATUS FINAL

STATE OF TEXAS
FRANCISCO RAMOS
108833
LICENSED PROFESSIONAL ENGINEER

DRAWN BY O.C. CHECKED BY J.A.M.

6/6/2016

S&B INFRASTRUCTURE, LTD.
2120 BLAINE ST. LAREDO, TEXAS 78043
TELEPHONE: (956) 568-2561 FAX: (956) 994-0027
ENGINEERING # F-1582 SURVEYING # 10193914

ESPEJO GATES
WEBB COUNTY, TEXAS

ESPEJO GATES
M.B.C.
STA 40+70.00
DETAILED GRADING

REFERENCE FILE NAME
-
DRAWING FILE NAME
U2338-MBC-7-STA 40+70.00 ALIGN

SHEET NUMBER 123 OF 152

L:\PROJECTS\WEBB COUNTY\U2338\Webb County TXDOT CERTEZ\dwg\DETAILED CULVERTS SHEETS\U2338-MBC-7-STA 40+70.00 ALIGN.dwg

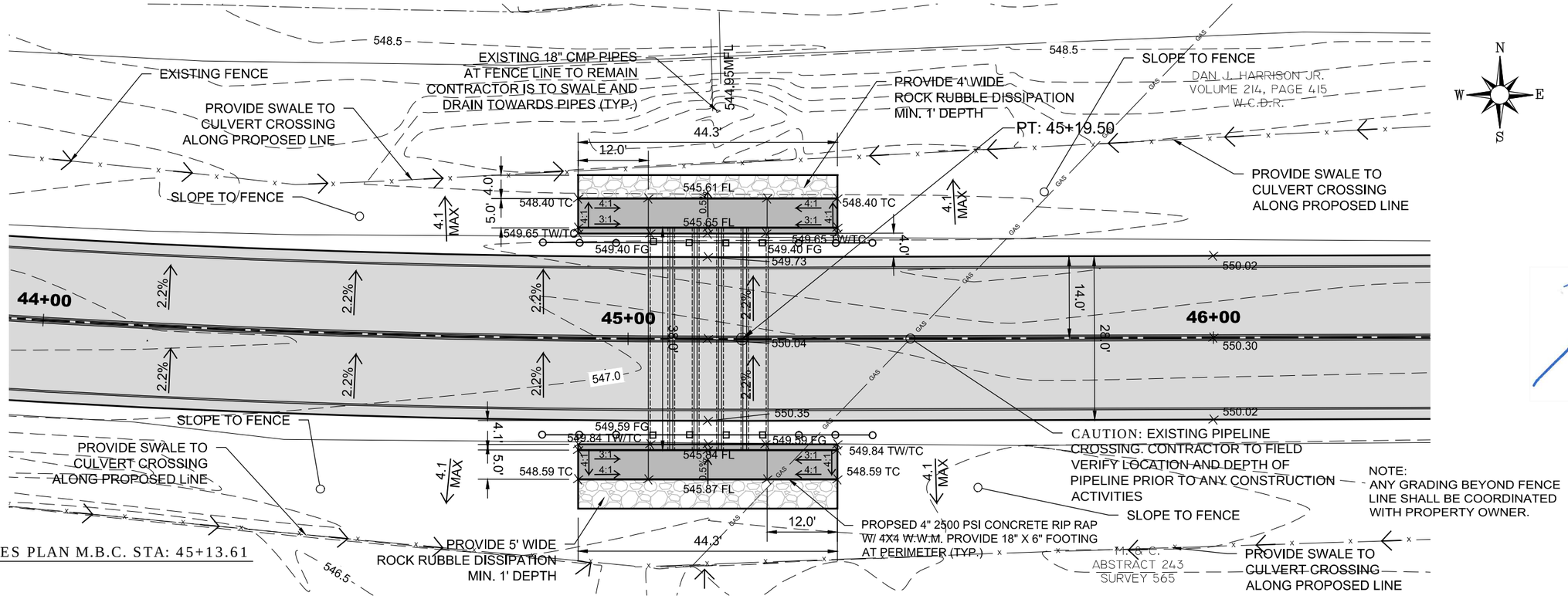

ESPEJO GATES PLAN M.B.C. STA: 45+13.61

SCALE: 1" = 20'

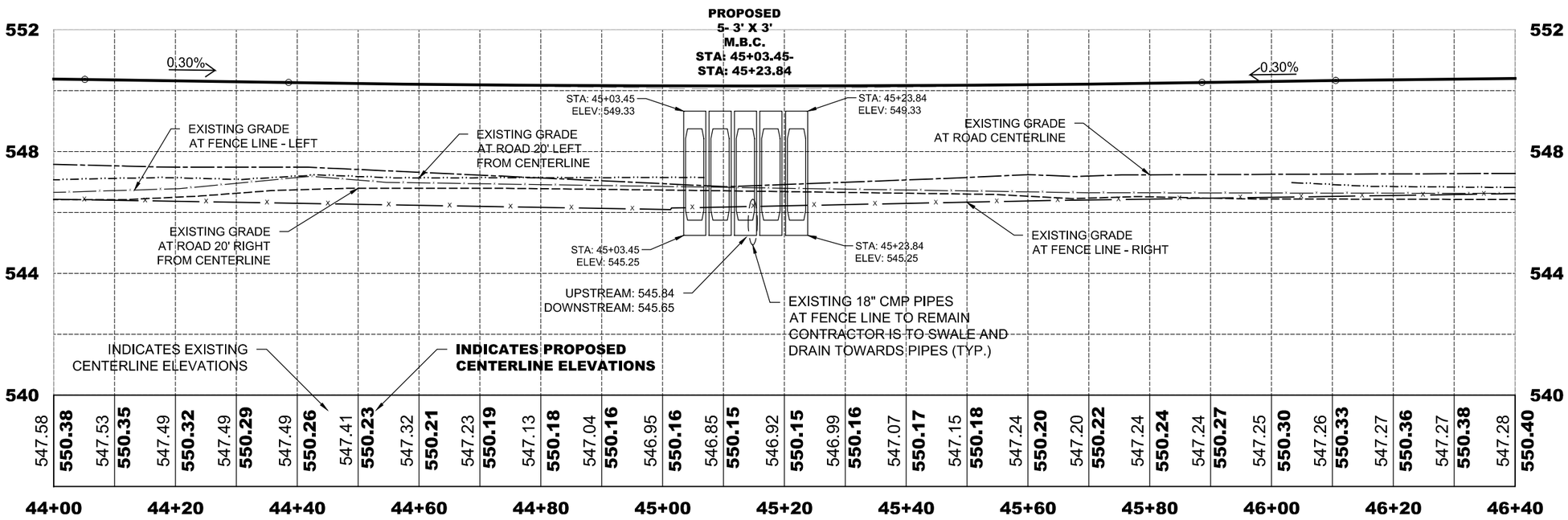

ESPEJO GATES PROFILE M.B.C. STA: 45+13.61

HORIZONTAL SCALE: 1" = 20'

VERTICAL SCALE: 1" = 4'

NO.	DATE	DESCRIPTION
1	---	---
2	---	---

REVISION

PLOTTED 6-6-2016

STATUS FINAL

STATE OF TEXAS
FRANCISCO RAMOS
108833
LICENSED
PROFESSIONAL ENGINEER

DRAWN BY O.C. CHECKED BY J.A.M.

6/6/2016

S&B INFRASTRUCTURE, LTD.
2120 BLAINE ST. LAREDO, TEXAS 78043
TELEPHONE: (956) 568-2561 FAX: (956) 994-0827
ENGINEERING # F-1582 SURVEYING # 10193914

ESPEJO GATES
WEBB COUNTY, TEXAS

ESPEJO GATES
M.B.C.
STA 45+13.61
DETAIL GRADING

REFERENCE FILE NAME -

DRAWING FILE NAME U2338-MBC-8-STA 45+13.61 ALIGN

SHEET NUMBER 124 OF 152

L:\PROJECTS\WEBB COUNTY\U2338\Webb County TXDOT CERTE2\dwg\DETAILED CULVERTS SHEETS\U2338-MBC-8-STA 45+13.61 ALIGN.dwg

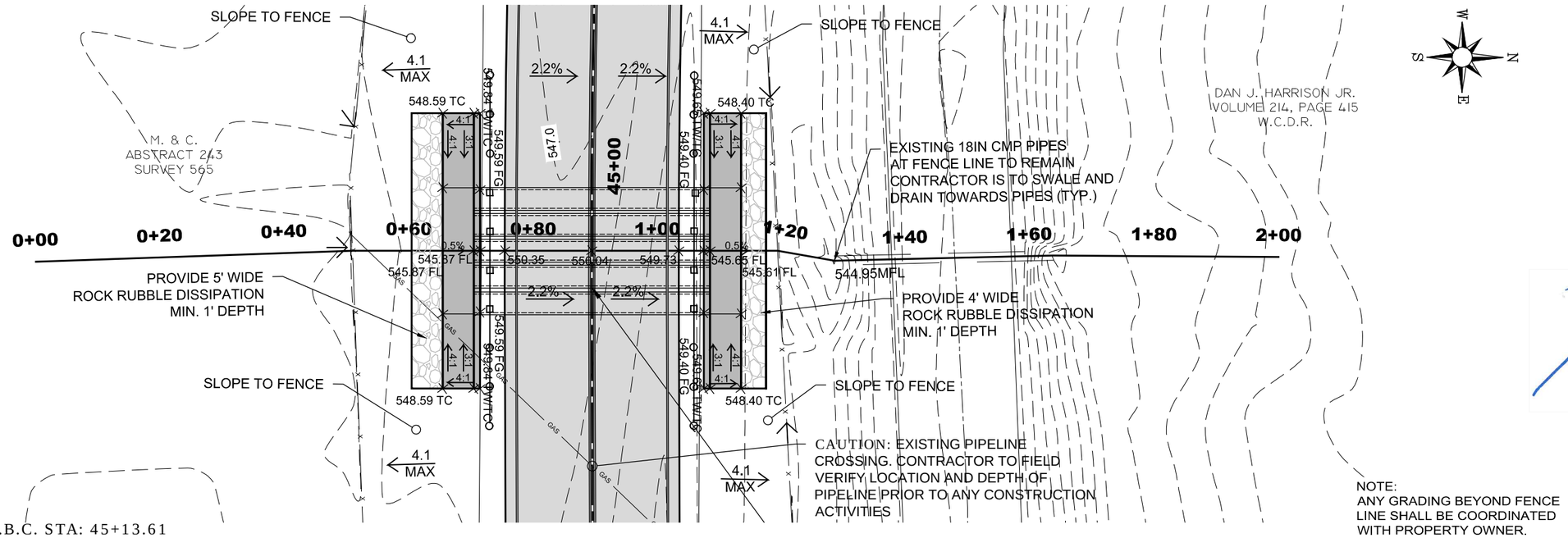

ESPEJO GATES PLAN M.B.C. STA: 45+13.61

SCALE: 1" = 20'

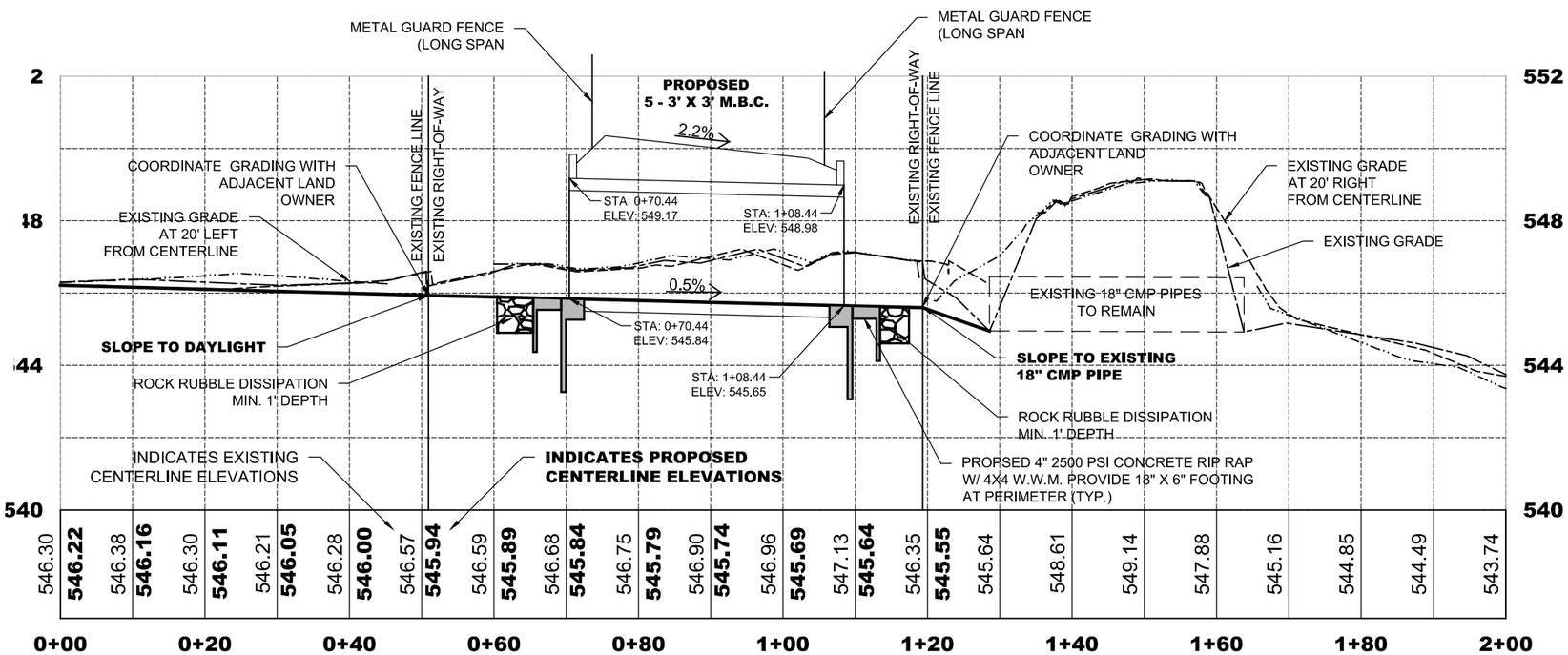

ESPEJO GATES PROFILE M.B.C. STA: 45+13.61

HORIZONTAL SCALE: 1" = 20'

VERTICAL SCALE: 1" = 4'

NO.	DATE	DESCRIPTION
1	---	---
2	---	---

REVISION

PLOTTED 6-6-2016

STATUS FINAL

STATE OF TEXAS
FRANCISCO RAMOS
108833
PROFESSIONAL LICENSED ENGINEER

DRAWN BY O.C. CHECKED BY J.A.M.

6/6/2016

S&B INFRASTRUCTURE, LTD.
2120 BLAINE ST. LAREDO, TEXAS 78043
TELEPHONE: (956) 568-2561 FAX: (956) 994-0422
ENGINEERING # F-1582 SURVEYING # 10193914

ESPEJO GATES
WEBB COUNTY, TEXAS

ESPEJO GATES
M.B.C.
STA. 45+13.61
DETAILED GRADING

REFERENCE FILE NAME
-
DRAWING FILE NAME
U2338-MBC-8-STA 45+13.61 ALIGN

SHEET NUMBER 125 OF 152

L:\PROJECTS\WEBB COUNTY\U2338\Webb County TXDOT CERTEZ\dwg\DETAILED CULVERTS SHEETS\U2338-MBC-8-STA 45+13.61 ALIGN.dwg

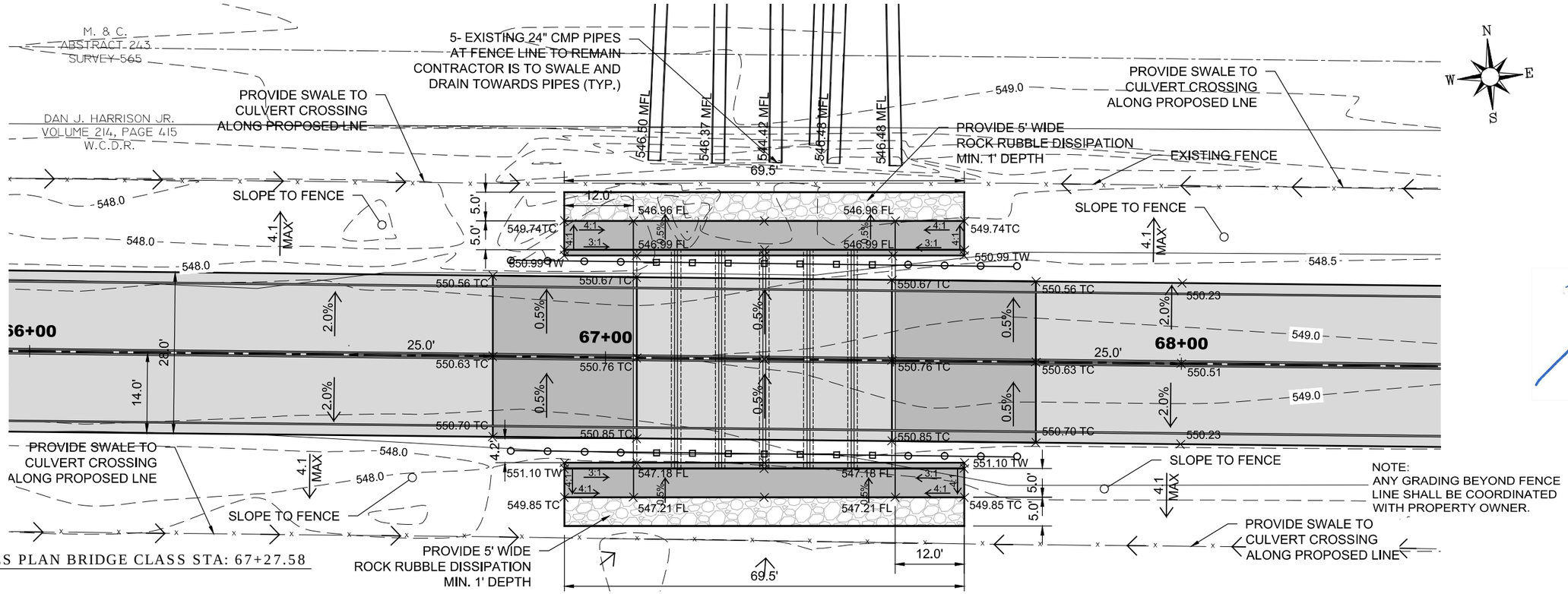

ESPEJO GATES PLAN BRIDGE CLASS STA: 67+27.58

SCALE: 1" = 20'

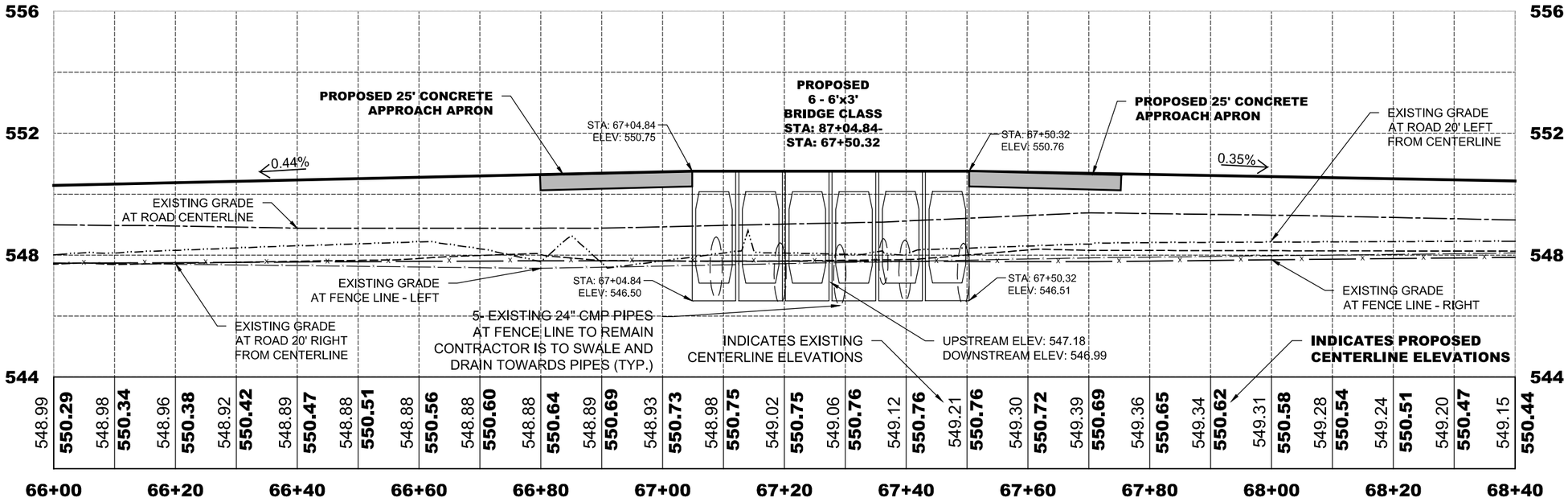

ESPEJO GATES PROFILE BRIDGE CLASS STA 67+27.58

HORIZONTAL SCALE: 1" = 20'

VERTICAL SCALE: 1" = 4'

NO.	DATE	DESCRIPTION
1	---	---
2	---	---

PLOTTED 6-6-2016

STATUS FINAL

STATE OF TEXAS
FRANCISCO RAMOS
108833
LICENSED
PROFESSIONAL ENGINEER

DRAWN BY O.C. CHECKED BY J.A.M.

6/6/2016

S&B INFRASTRUCTURE, LTD.
2120 BLAINE ST. LAREDO, TEXAS 78043
TELEPHONE: (956) 568-2561 FAX: (956) 994-0027
ENGINEERING # F-1582 SURVEYING # 10193914

ESPEJO GATES
WEBB COUNTY, TEXAS

ESPEJO GATES
BRIDGE CLASS
STA 67+27.58
DETAILED GRADING

REFERENCE FILE NAME -

DRAWING FILE NAME U2338-MBC-9-STA 67+27.58 ALIGN

L:\PROJECTS\WEBB COUNTY\U2338\Webb County TXDOT CERTE\dwg\DETAILED CULVERTS SHEETS\U2338-MBC-9-STA 67+27.58 ALIGN.dwg

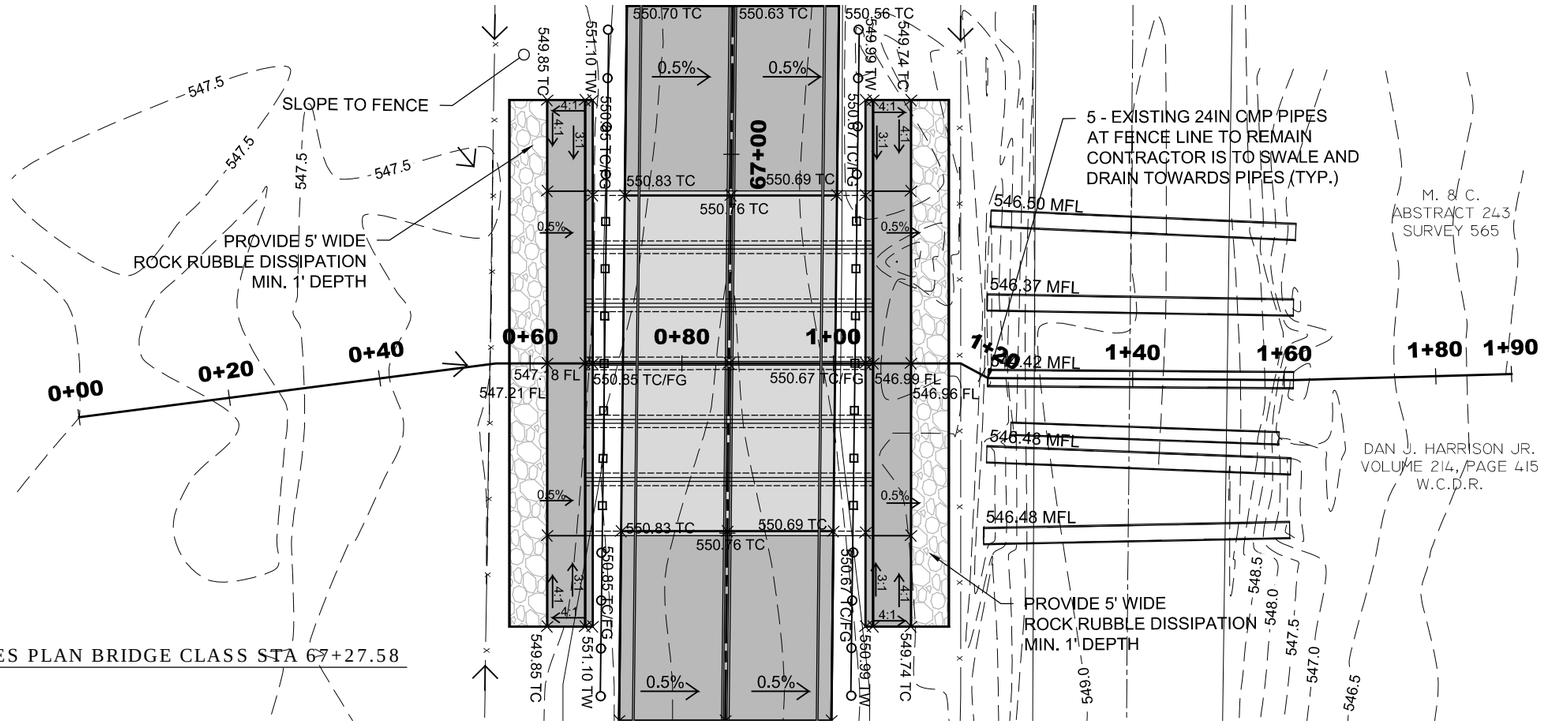

NOTE:
ANY GRADING BEYOND FENCE LINE SHALL BE COORDINATED WITH PROPERTY OWNER.

ESPEJO GATES PLAN BRIDGE CLASS STA 67+27.58
SCALE: 1" = 20'

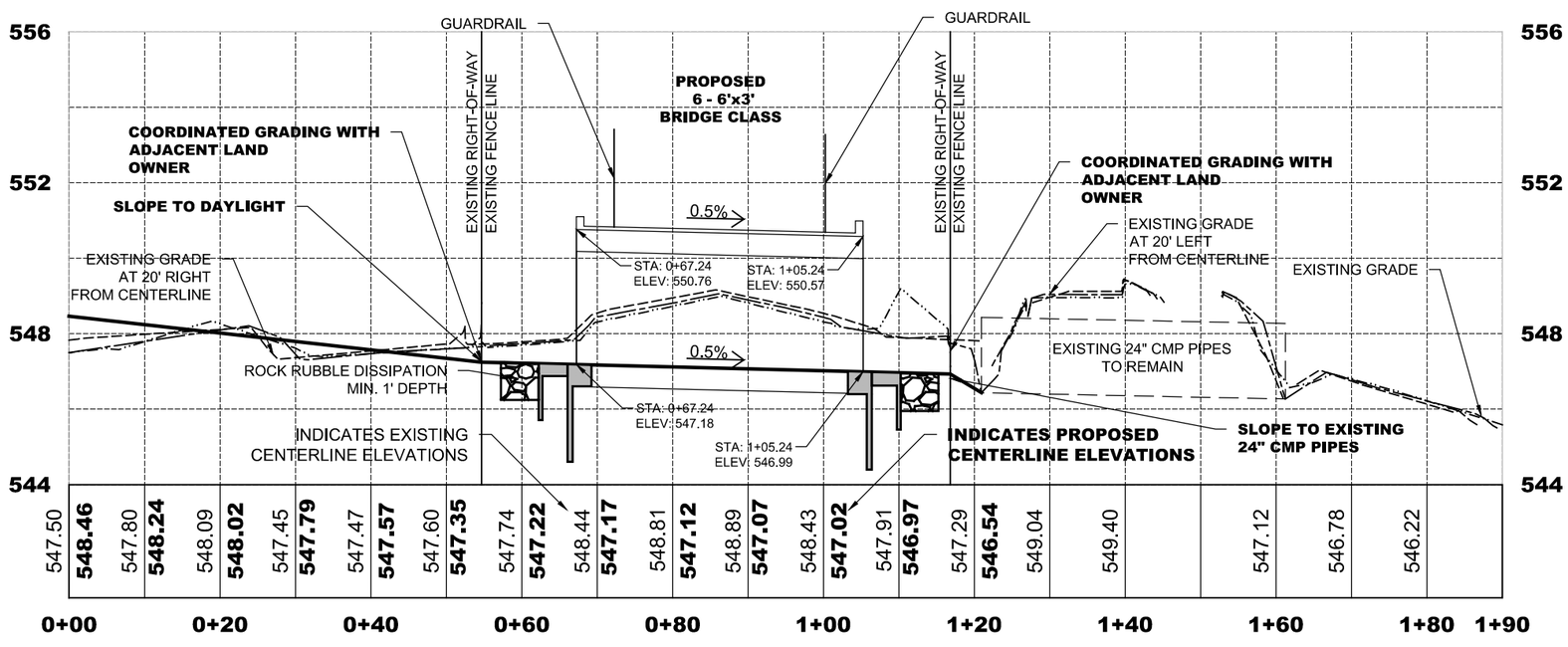

ESPEJO GATES PROFILE BRIDGE CLASS STA 67+27.58
HORIZONTAL SCALE: 1" = 20'
VERTICAL SCALE: 1" = 4'

NO.	DATE	DESCRIPTION
1	---	---
2	---	---

PLOTTED 6-6-2016
STATUS FINAL

STATE OF TEXAS
FRANCISCO RAMOS
108833
LICENSED PROFESSIONAL ENGINEER

DRAWN BY O.C.
CHECKED BY J.A.M.

6/6/2016

S&B INFRASTRUCTURE, LTD.
2120 BLAINE ST. LAREDO, TEXAS 78043
TELEPHONE: (956) 568-2561 FAX: (956) 994-0022
ENGINEERING # F-1582 SURVEYING # 10193914

ESPEJO GATES
WEBB COUNTY, TEXAS

ESPEJO GATES
BRIDGE CLASS
STA 67+27.58
DETAILED GRADING

REFERENCE FILE NAME
-
DRAWING FILE NAME
U2338-MBC-9-STA 67+27.58 ALIGN

L:\PROJECTS\WEBB COUNTY\U2338\Webb County TXDOT CERTEZ\dwg\DETAILED CULVERTS SHEETS\U2338-MBC-9-STA 67+27.58 ALIGN.dwg

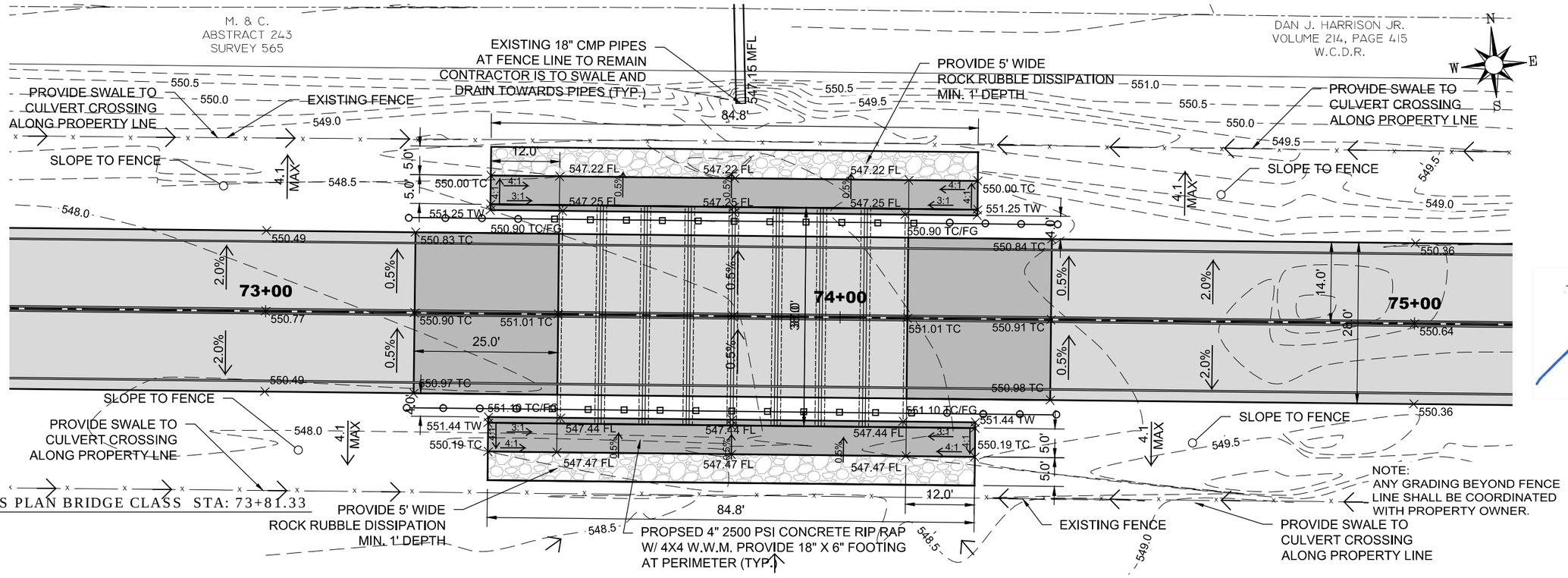

ESPEJO GATES PLAN BRIDGE CLASS STA: 73+81.33

SCALE: 1" = 20'

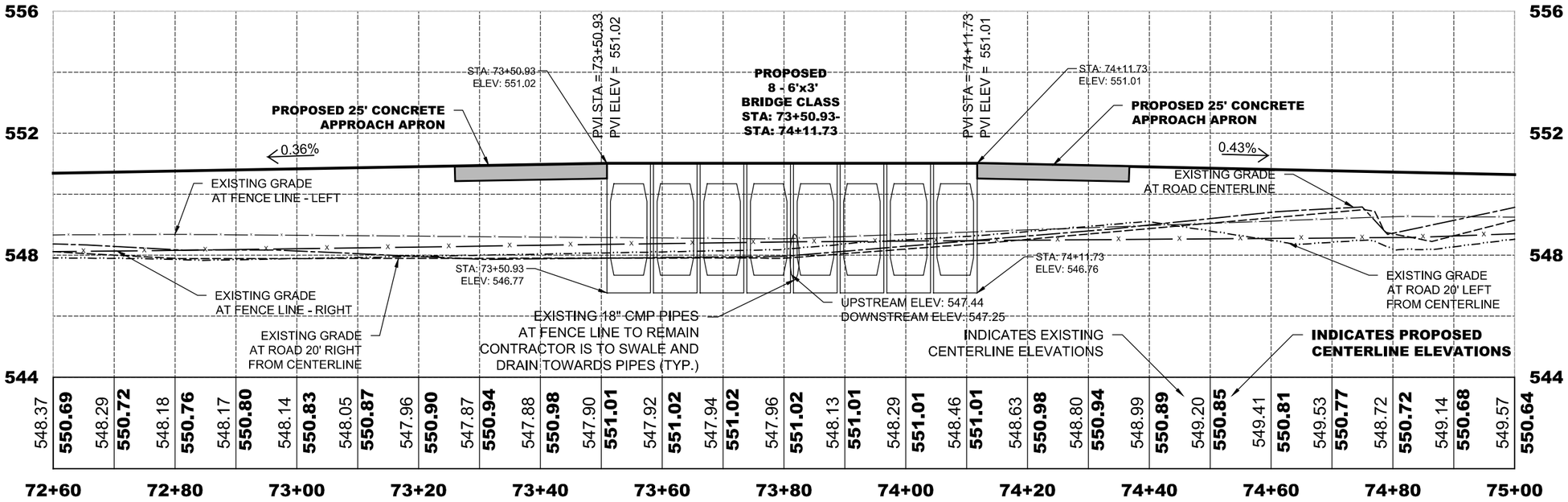

ESPEJO GATES PROFILE BRIDGE CLASS STA 73+81.33

HORIZONTAL SCALE: 1" = 20'

VERTICAL SCALE: 1" = 4'

NO.	DATE	DESCRIPTION
1	---	---
2	---	---

REVISION

PLOTTED 6-6-2016

STATUS FINAL

STATE OF TEXAS
FRANCISCO RAMOS
108833
LICENSED PROFESSIONAL ENGINEER

6/6/2016

DRAWN BY O.C.

CHECKED BY J.A.M.

S&B INFRASTRUCTURE, LTD.
2120 BLAINE ST. LAREDO, TEXAS 78043
TELEPHONE: (956) 568-2561 FAX: (956) 994-0421
ENGINEERING # F-1582 SURVEYING # 10193914

ESPEJO GATES
WEBB COUNTY, TEXAS

ESPEJO GATES
BRIDGE CLASS
STA 73+81.33
DETAILED GRADING

REFERENCE FILE NAME
-

DRAWING FILE NAME
U2338-MBC-10-STA 73+81.33 ALIGN

L:\PROJECTS\WEBB COUNTY\U2338\Webb County TXDOT CERTEZ\dwg\DETAILED CULVERTS SHEETS\U2338-MBC-10-STA 73+81.33 ALIGN.dwg

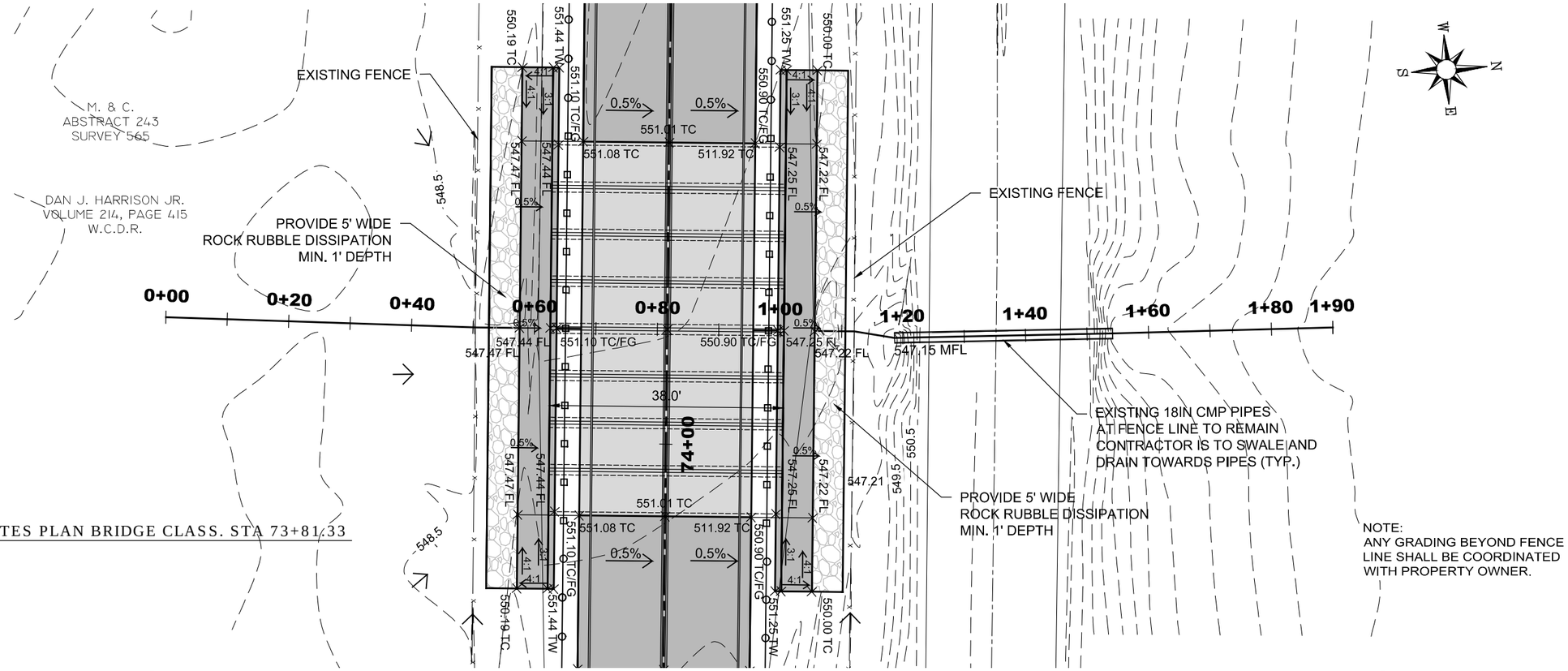

NOTE:
ANY GRADING BEYOND FENCE LINE SHALL BE COORDINATED WITH PROPERTY OWNER.

ESPEJO GATES PLAN BRIDGE CLASS. STA 73+81.33
SCALE: 1" = 20'

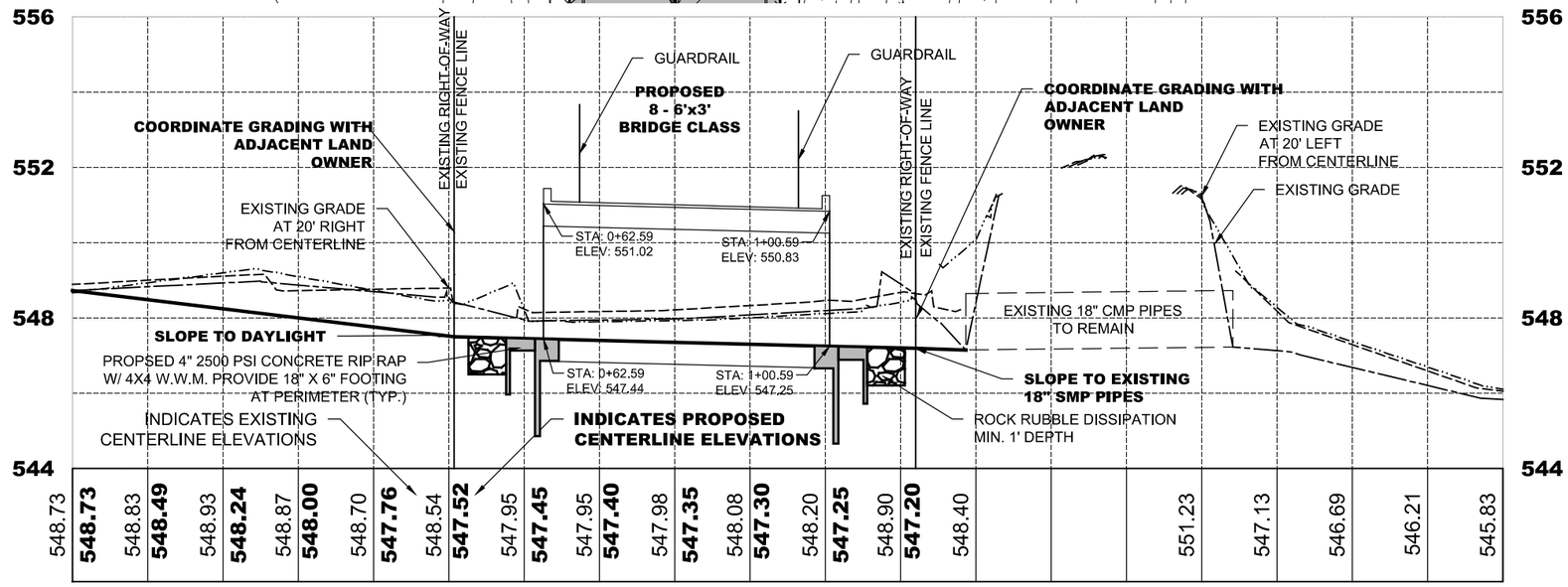

ESPEJO GATES PROFILE BRIDGE CLASS STA 73+81.33
HORIZONTAL SCALE: 1" = 20'
VERTICAL SCALE: 1" = 4'

NO.	DATE	REVISION DESCRIPTION
1	---	---
2	---	---

PLOTTED 6-6-2016
STATUS FINAL

STATE OF TEXAS
FRANCISCO RAMOS
108833
LICENSED PROFESSIONAL ENGINEER

DRAWN BY O.C.
CHECKED BY J.A.M.

6/6/2016

S&B INFRASTRUCTURE, LTD.
2120 BLAINE ST. LAREDO, TEXAS 78043
TELEPHONE: (956) 568-2561 FAX: (956) 994-0421
ENGINEERING # F-1582 SURVEYING # 10193914

ESPEJO GATES
WEBB COUNTY, TEXAS

ESPEJO GATES
BRIDGE CLASS
STA 73+81.33
DETAILED GRADING

REFERENCE FILE NAME
-
DRAWING FILE NAME
U2338-MBC-10-STA 73+81.33 ALIGN

L:\PROJECTS\WEBB COUNTY\U2338\Webb County TXDOT CERTEZ\dwg\DETAILED CULVERTS SHEETS\U2338-MBC-10-STA 73+81.33 ALIGN.dwg

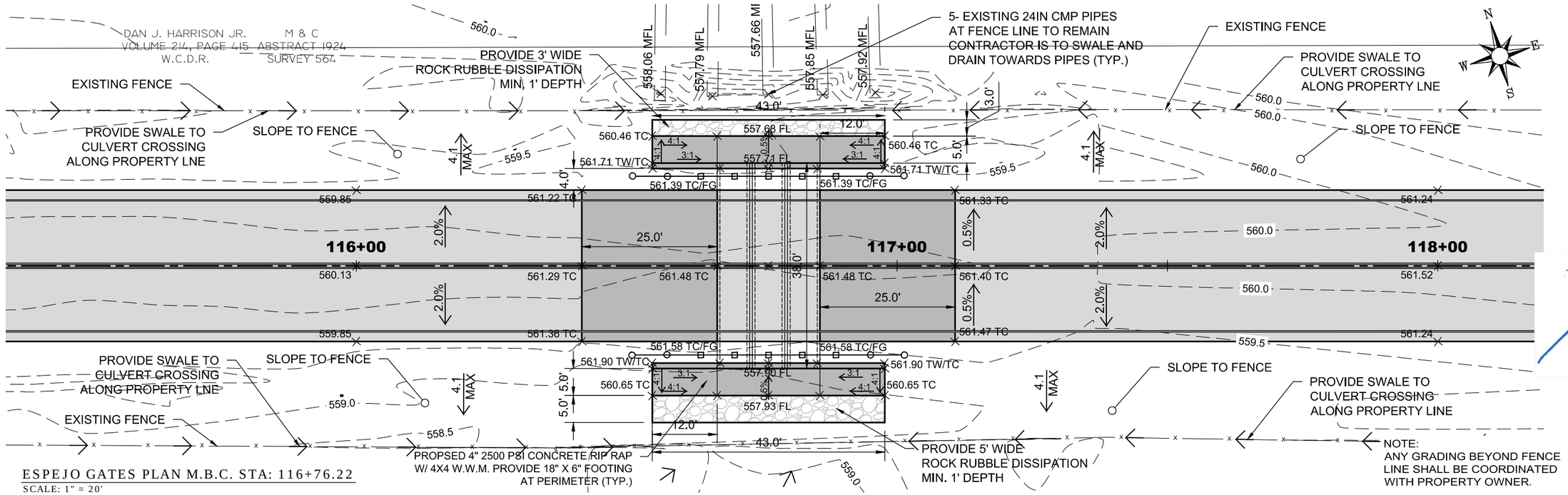

ESPEJO GATES PLAN M.B.C. STA: 116+76.22

SCALE: 1" = 20'

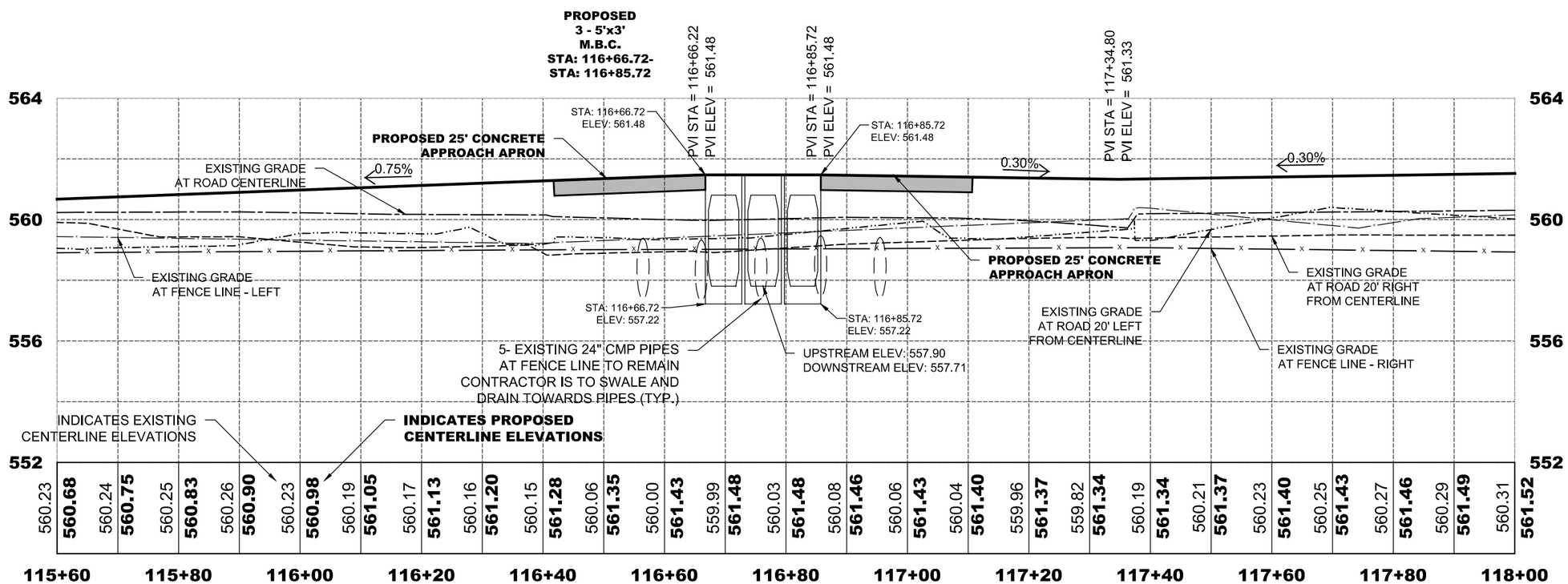

ESPEJO GATES PROFILE M.B.C. STA: 116+76.22

HORIZONTAL SCALE: 1" = 20'

VERTICAL SCALE: 1" = 4'

NO.	DATE	DESCRIPTION
1	---	---
2	---	---

REVISION

PLOTTED 6-6-2016

STATUS FINAL

STATE OF TEXAS
FRANCISCO RAMOS
108833
PROFESSIONAL LICENSED ENGINEER

DRAWN BY O.C.

CHECKED BY J.A.M.

6/6/2016

S&B INFRASTRUCTURE, LTD.
4001 MCPHERSON SUITE 204 LAREDO, TEXAS 78041
TELEPHONE: (956) 568-2561 FAX: (956) 994-0427
ENGINEERING # F-1582 SURVEYING # 10193914

ESPEJO GATES
WEBB COUNTY, TEXAS

ESPEJO GATES
M.B.C.
STA:116+76.22
DETAILED GRADING

REFERENCE FILE NAME -

DRAWING FILE NAME U2338-MBC-11-STA 116+76.22 ALIGN

L:\PROJECTS\WEBB COUNTY\U2338\Webb County TXDOT CERTE\dwg\DETAILED CULVERTS SHEETS\U2338-MBC-11-STA 116+76.22 ALIGN.dwg

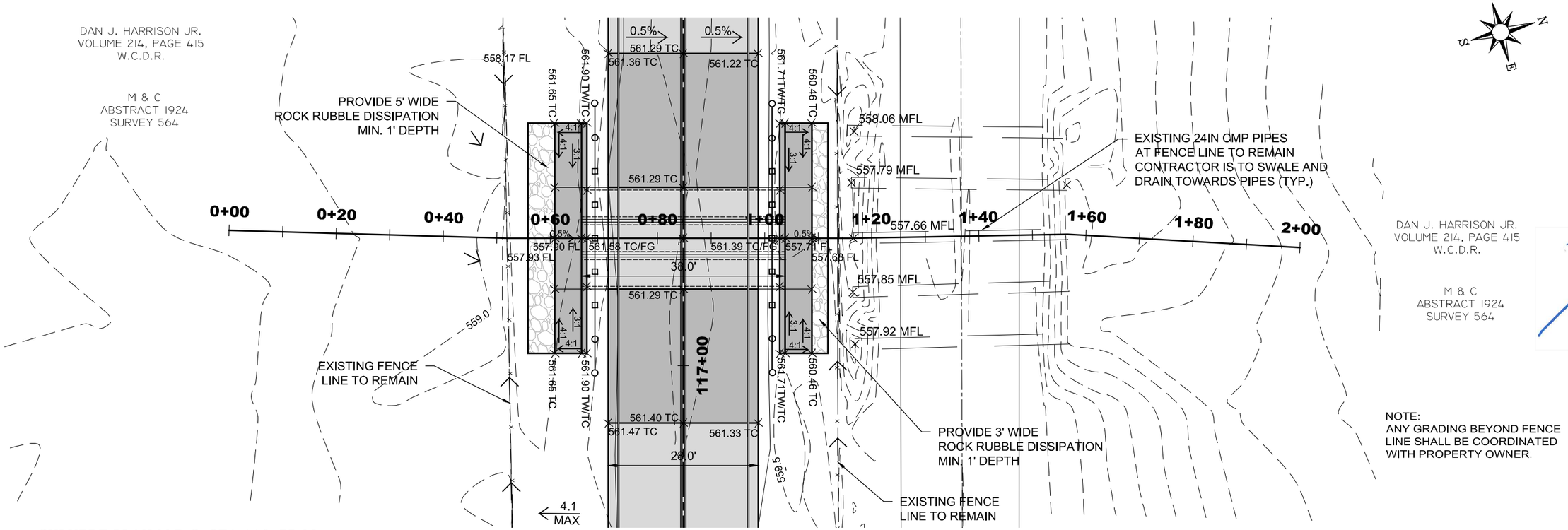

CULVERT PLAN M.B.C. STA:116+77.00

SCALE: 1" = 20'

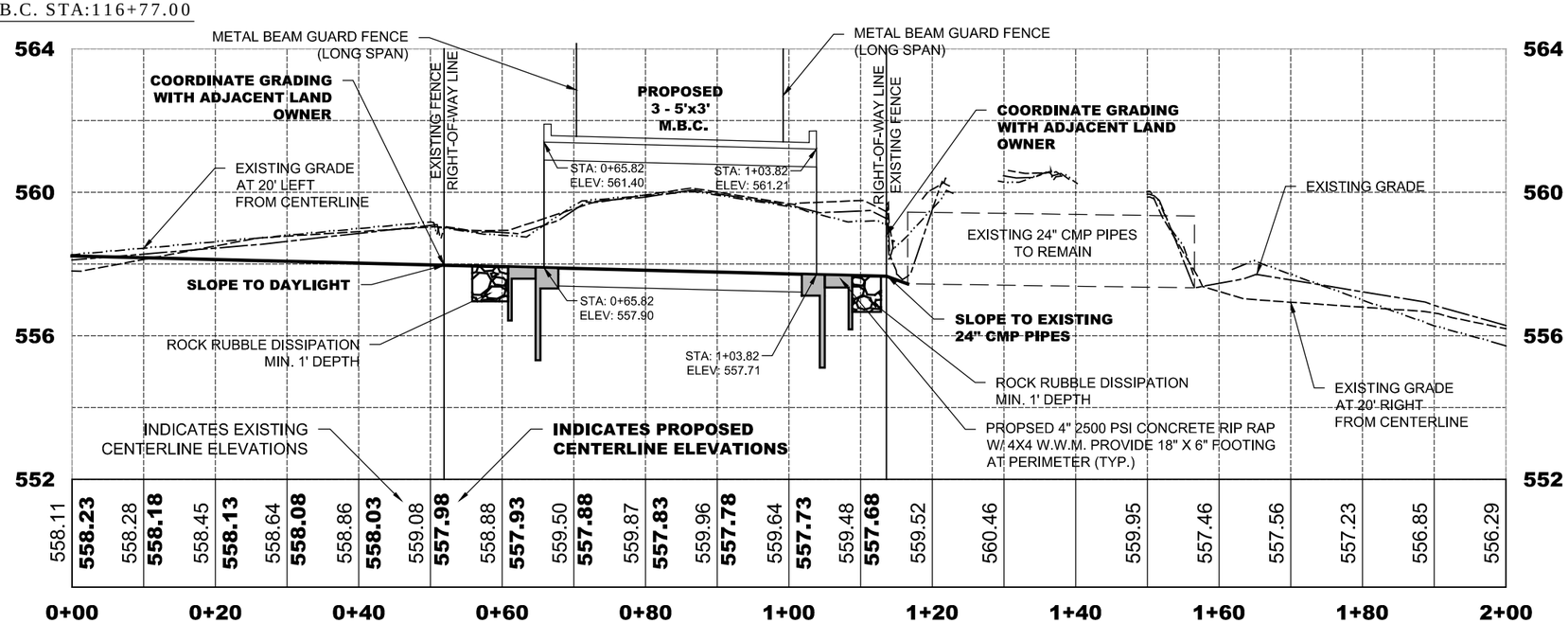

CULVERT PROFILE M.B.C. STA: 116+77.00

HORIZONTAL SCALE: 1" = 20'

VERTICAL SCALE: 1" = 4'

L:\PROJECTS\WEBB COUNTY\U2338\Webb County TXDOT CERTEZ\dwg\DETAILED CULVERTS SHEETS\U2338-MBC-11-STA 116+76.22 ALIGN.dwg

NO.	DATE	DESCRIPTION
1	---	---
2	---	---

PLOTTED 6-6-2016

STATUS FINAL

STATE OF TEXAS
FRANCISCO RAMOS
108833
PROFESSIONAL LICENSED ENGINEER

DRAWN BY O.C. CHECKED BY J.A.M.

6/6/2016

S&B INFRASTRUCTURE, LTD.
2120 BLAINE ST. LAREDO, TEXAS 78043
TELEPHONE: (956) 568-2561 FAX: (956) 994-0421
ENGINEERING # F-1582 SURVEYING # 10193914

ESPEJO GATES
WEBB COUNTY, TEXAS

ESPEJO GATES
M.B.C.
STA: 116+77.00
DETAILED GRADING

REFERENCE FILE NAME -

DRAWING FILE NAME U2338-MBC-11-STA 116+76.22 ALIGN

SHEET NUMBER 131 OF 152

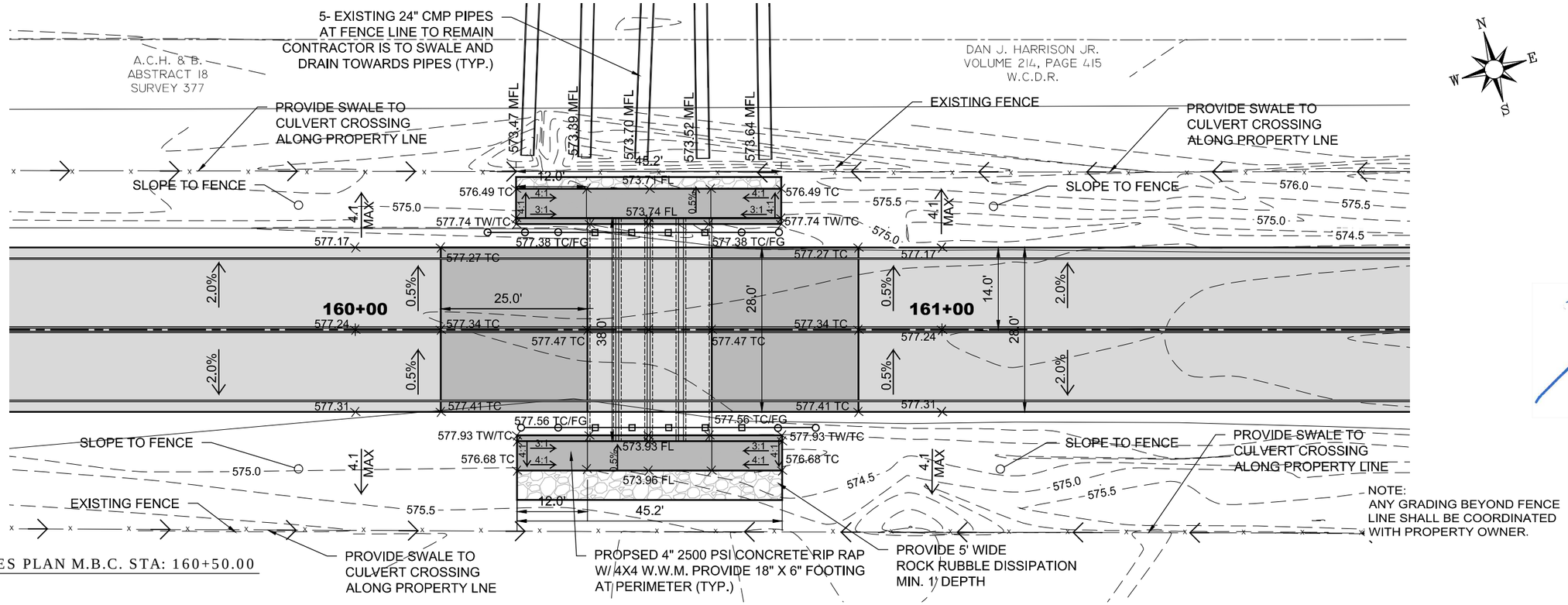

ESPEJO GATES PLAN M.B.C. STA: 160+50.00

SCALE: 1" = 20'

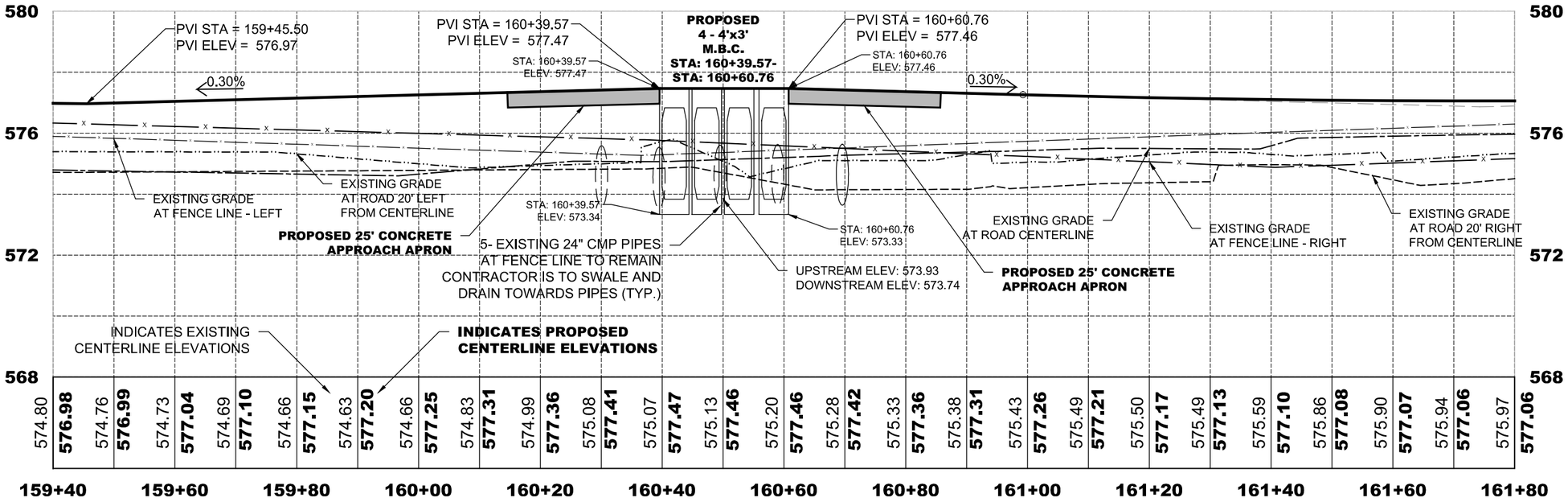

ESPEJO GATES PROFILE M.B.C. STA 160+50.00

HORIZONTAL SCALE: 1" = 20'

VERTICAL SCALE: 1" = 4'

NO.	DATE	REVISION DESCRIPTION
1	---	---
2	---	---

PLOTTED 6-6-2016

STATUS FINAL

STATE OF TEXAS
FRANCISCO RAMOS
108833
PROFESSIONAL LICENSED ENGINEER

DRAWN BY O.C. CHECKED BY J.A.M.

6/6/2016

S&B INFRASTRUCTURE, LTD.
2120 BLAINE ST. LAREDO, TEXAS 78043
TELEPHONE: (956) 568-2561 FAX: (956) 994-0021
ENGINEERING # F-1582 SURVEYING # 10193914

ESPEJO GATES
WEBB COUNTY, TEXAS

ESPEJO GATES
M.B.C.
STA 160+50.00
DETAILED GRADING

REFERENCE FILE NAME -

DRAWING FILE NAME U2338-MBC-12-STA 160+50 ALIGN

SHEET NUMBER 132 OF 152

L:\PROJECTS\WEBB COUNTY\U2338\Webb County TXDOT CERTEZ\dwg\DETAILED CULVERTS SHEETS\U2338-MBC-12-STA 160+50 ALIGN.dwg

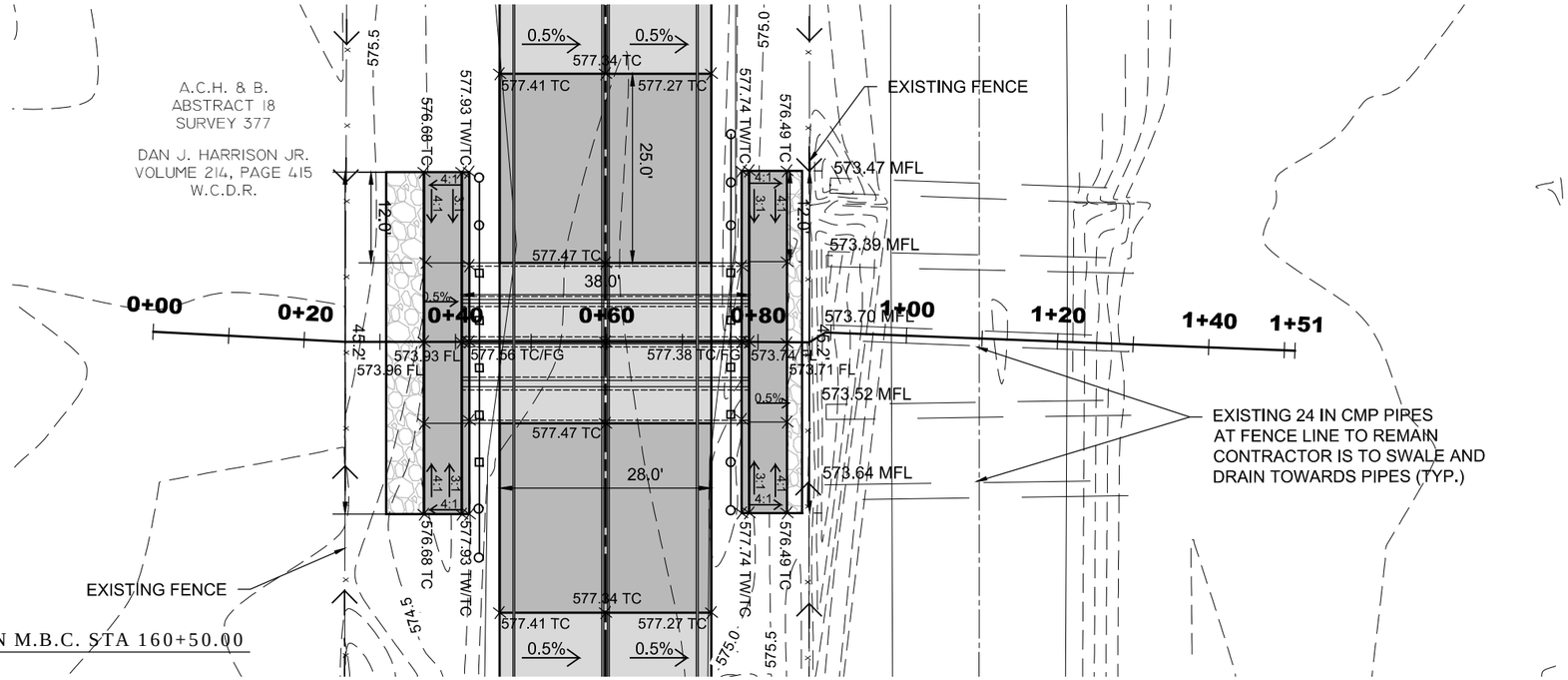

ESPEJO GATES PLAN M.B.C. STA 160+50.00

SCALE: 1" = 20'

NOTE:
ANY GRADING BEYOND FENCE LINE SHALL BE COORDINATED WITH PROPERTY OWNER.

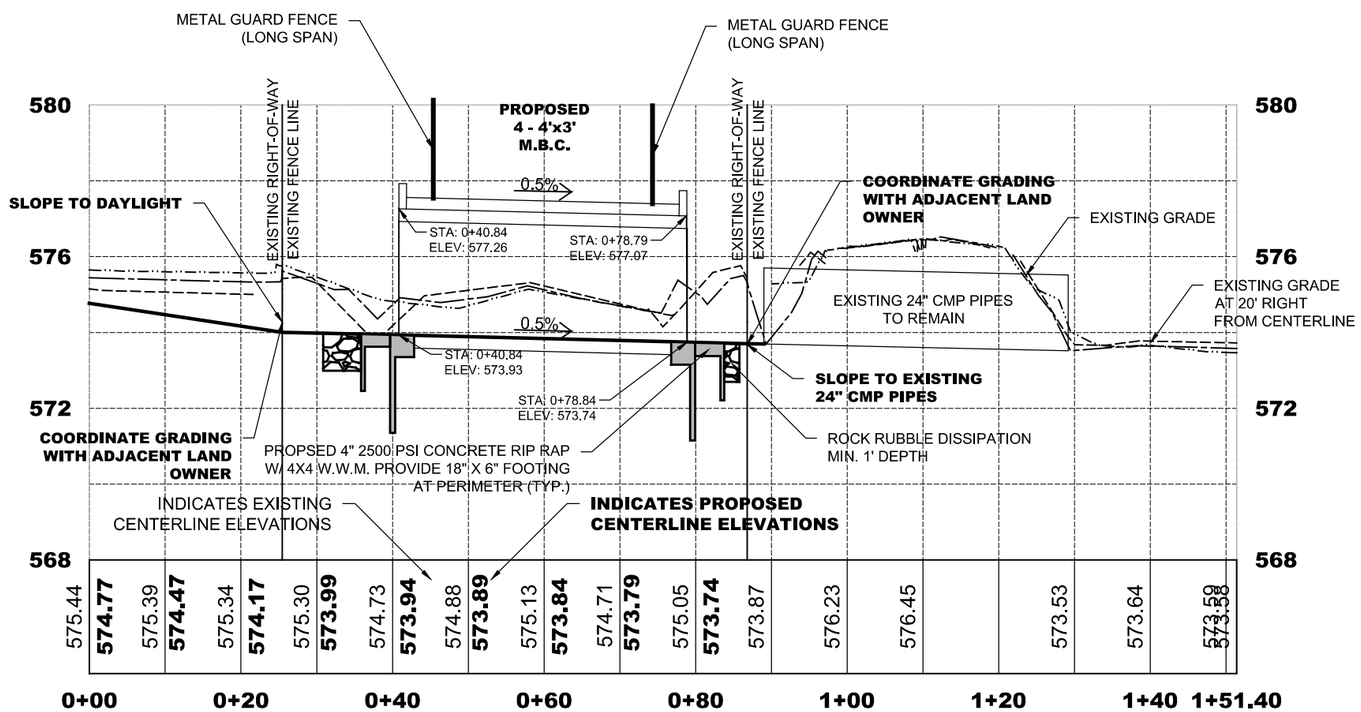

ESPEJO GATES PROFILE M.B.C. STA 160+50.00

HORIZONTAL SCALE: 1" = 20'

VERTICAL SCALE: 1" = 4'

NO.	DATE	REVISION DESCRIPTION
1	---	---
2	---	---

PLOTTED 6-6-2016

STATUS FINAL

STATE OF TEXAS
FRANCISCO RAMOS
108833
PROFESSIONAL ENGINEER

DRAWN BY O.C.

CHECKED BY J.A.M.

6/6/2016

S&B INFRASTRUCTURE, LTD.
2120 BLAINE ST. LAREDO, TEXAS 78043
TELEPHONE: (956) 568-2561 FAX: (956) 994-0421
ENGINEERING # F-1582 SURVEYING # 10193914

ESPEJO GATES
WEBB COUNTY, TEXAS

ESPEJO GATES
M.B.C.
STA 160+50.00
DETAILED GRADING

REFERENCE FILE NAME
-

DRAWING FILE NAME
U2338-MBC-12-STA 160+50 ALIGN

SHEET NUMBER 133 OF 152

L:\PROJECTS\WEBB COUNTY\U2338\Webb County TXDOT CERTEZ\dwg\DETAILED CULVERTS SHEETS\U2338-MBC-12-STA 160+50 ALIGN.dwg

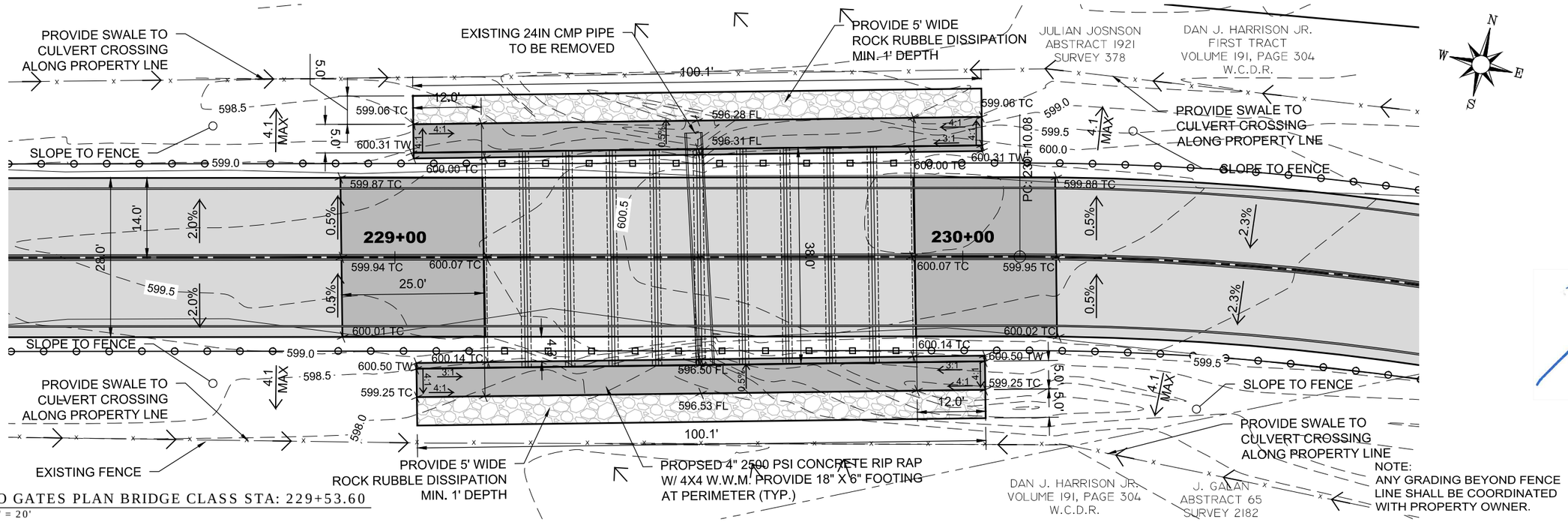

ESPEJO GATES PLAN BRIDGE CLASS STA: 229+53.60

SCALE: 1" = 20'

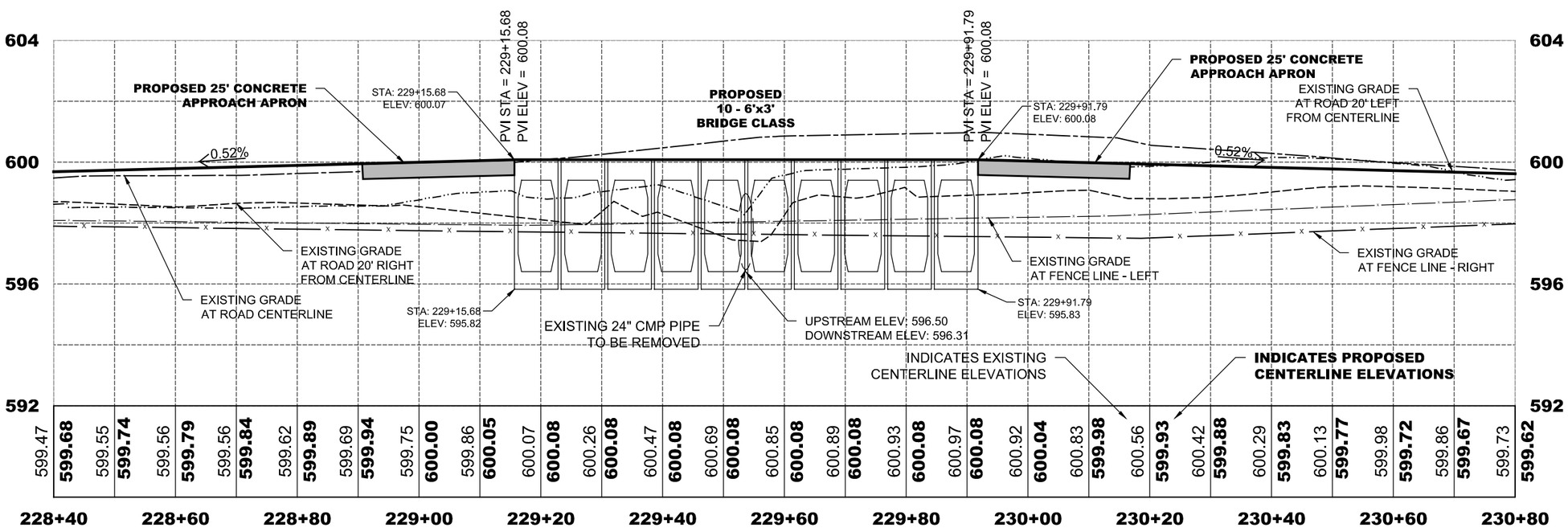

ESPEJO GATES PROFILE BRIDGE CLASS STA 229+53.60

HORIZONTAL SCALE: 1" = 20'

VERTICAL SCALE: 1" = 4'

NO.	DATE	DESCRIPTION
1	---	---
2	---	---

REVISION

PLOTTED 6-6-2016

STATUS FINAL

STATE OF TEXAS
FRANCISCO RAMOS
108833
LICENSED PROFESSIONAL ENGINEER

DRAWN BY O.C. CHECKED BY J.A.M.

6/6/2016

S&B INFRASTRUCTURE, LTD.
2120 BLAINE ST. LAREDO, TEXAS 78043
TELEPHONE: (956) 568-2561 FAX: (956) 994-0027
ENGINEERING # F-1582 SURVEYING # 10193914

ESPEJO GATES
WEBB COUNTY, TEXAS

ESPEJO GATES
BRIDGE CLASS
STA 229+53.60
DETAILED GRADING

REFERENCE FILE NAME -

DRAWING FILE NAME U2338-MBC-13-STA 229+53.65 ALIGN

SHEET NUMBER 134 OF 152

L:\PROJECTS\WEBB COUNTY\U2338\Webb County TXDOT CERTEZ\dwg\DETAILED CULVERTS SHEETS\U2338-MBC-13-STA 229+53.65 ALIGN.dwg

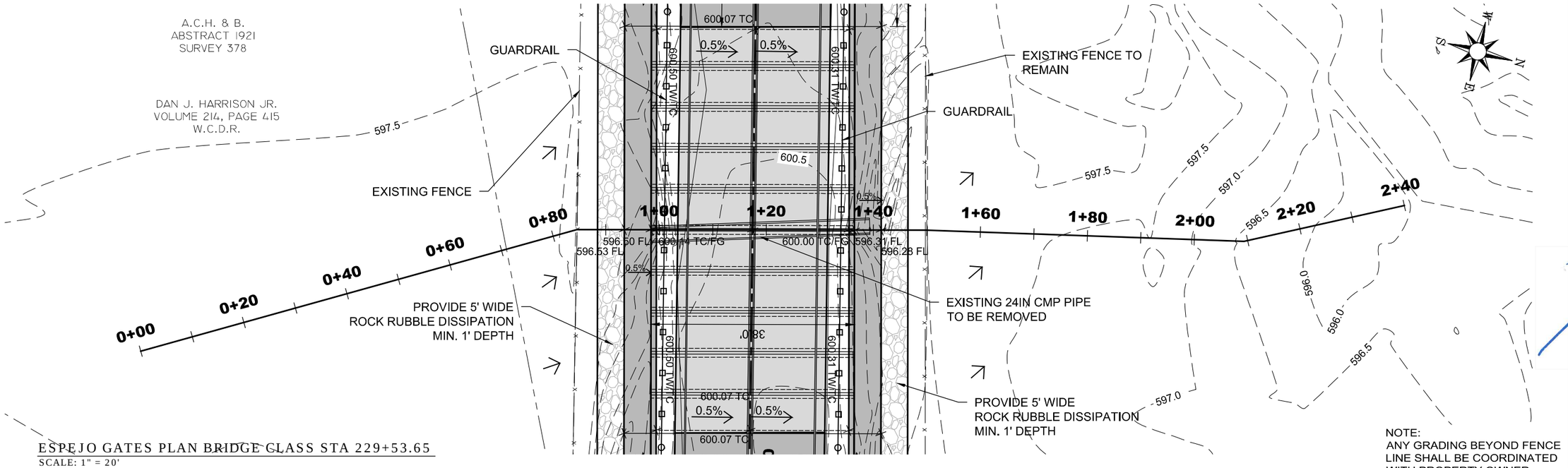

NOTE:
ANY GRADING BEYOND FENCE LINE SHALL BE COORDINATED WITH PROPERTY OWNER.

ESPEJO GATES PLAN BRIDGE CLASS STA 229+53.65
SCALE: 1" = 20'

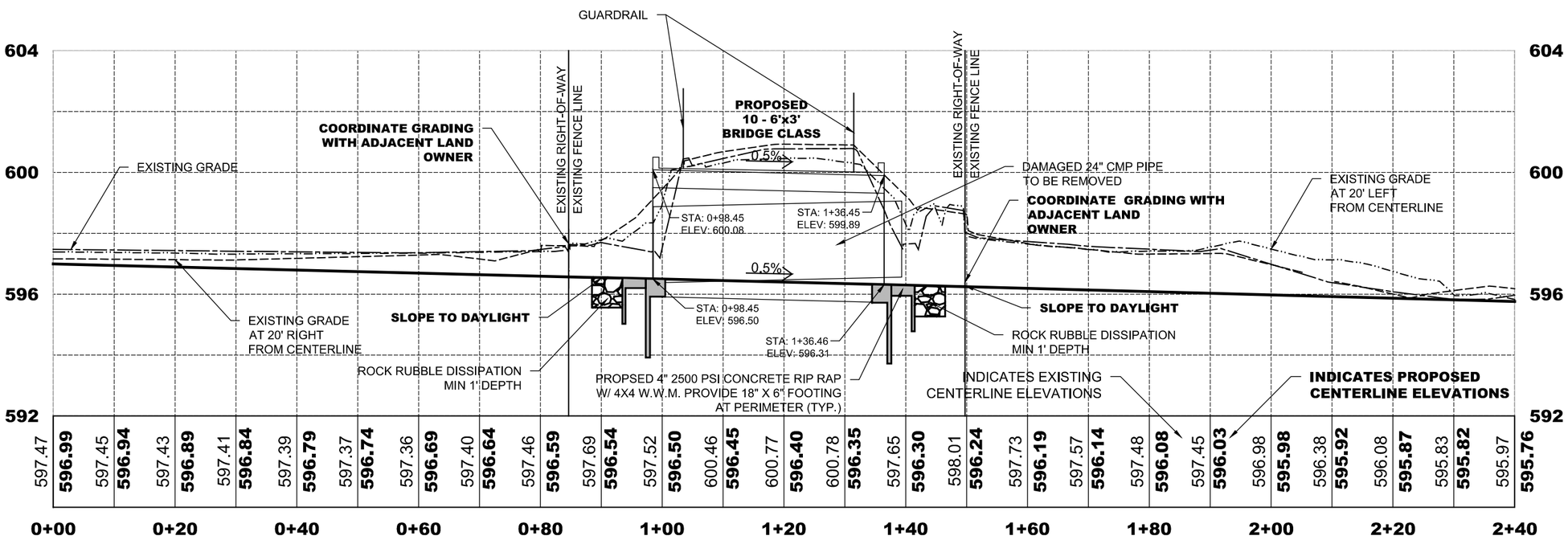

ESPEJO GATES PROFILE BRIDGE CLASS STA 229+53.65
HORIZONTAL SCALE: 1" = 20'
VERTICAL SCALE: 1" = 4'

NO.	DATE	DESCRIPTION
1	---	---
2	---	---

PLOTTED 6-6-2016
STATUS FINAL

STATE OF TEXAS
FRANCISCO RAMOS
108833
PROFESSIONAL ENGINEER

DRAWN BY O.C.
CHECKED BY J.A.M.

6/6/2016

S&B INFRASTRUCTURE, LTD.
2120 BLAINE ST. LAREDO, TEXAS 78043
TELEPHONE: (956) 568-2561 FAX: (956) 994-0822
ENGINEERING # F-1582 SURVEYING # 10193914

ESPEJO GATES
WEBB COUNTY, TEXAS

ESPEJO GATES
BRIDGE CLASS
STA 229+53.65
DETAILED GRADING

REFERENCE FILE NAME
-
DRAWING FILE NAME
U2338-MBC-13-STA 229+53.65 ALIGN

L:\PROJECTS\WEBB COUNTY\U2338\Webb County TXDOT CERTEZ\dwg\DETAILED CULVERTS SHEETS\U2338-MBC-13-STA 229+53.65 ALIGN.dwg

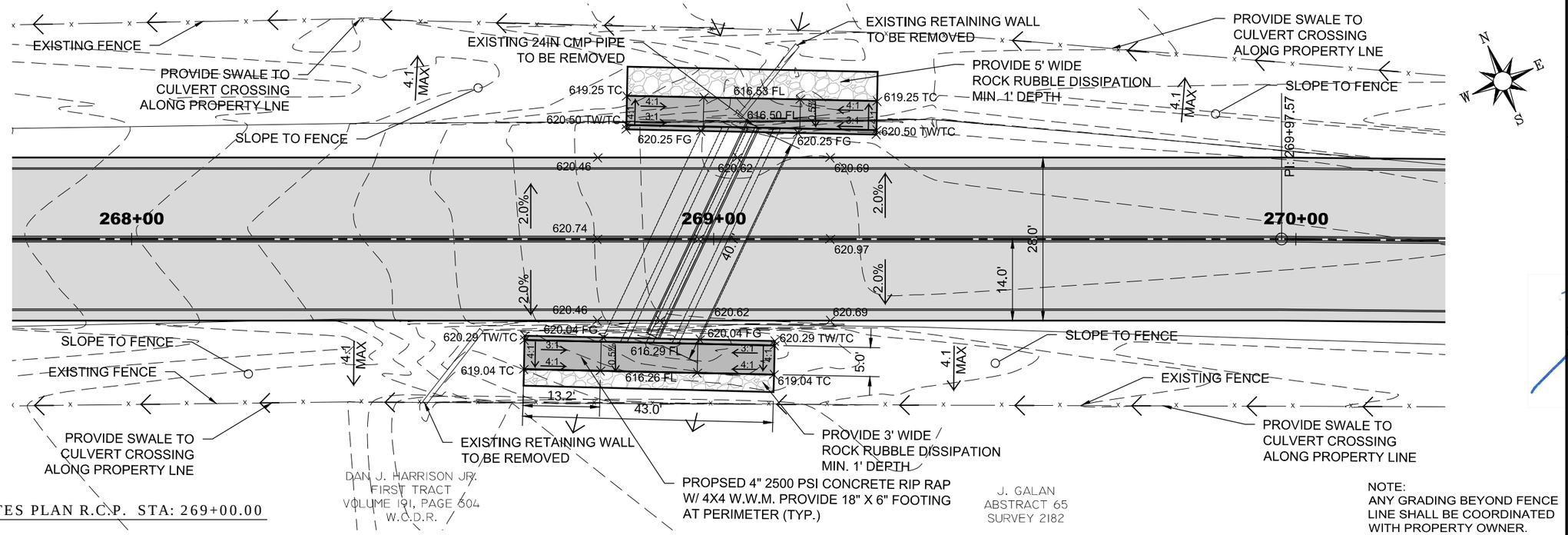

NOTE:
ANY GRADING BEYOND FENCE LINE SHALL BE COORDINATED WITH PROPERTY OWNER.

ESPEJO GATES PLAN R.C.P. STA: 269+00.00
SCALE: 1" = 20'

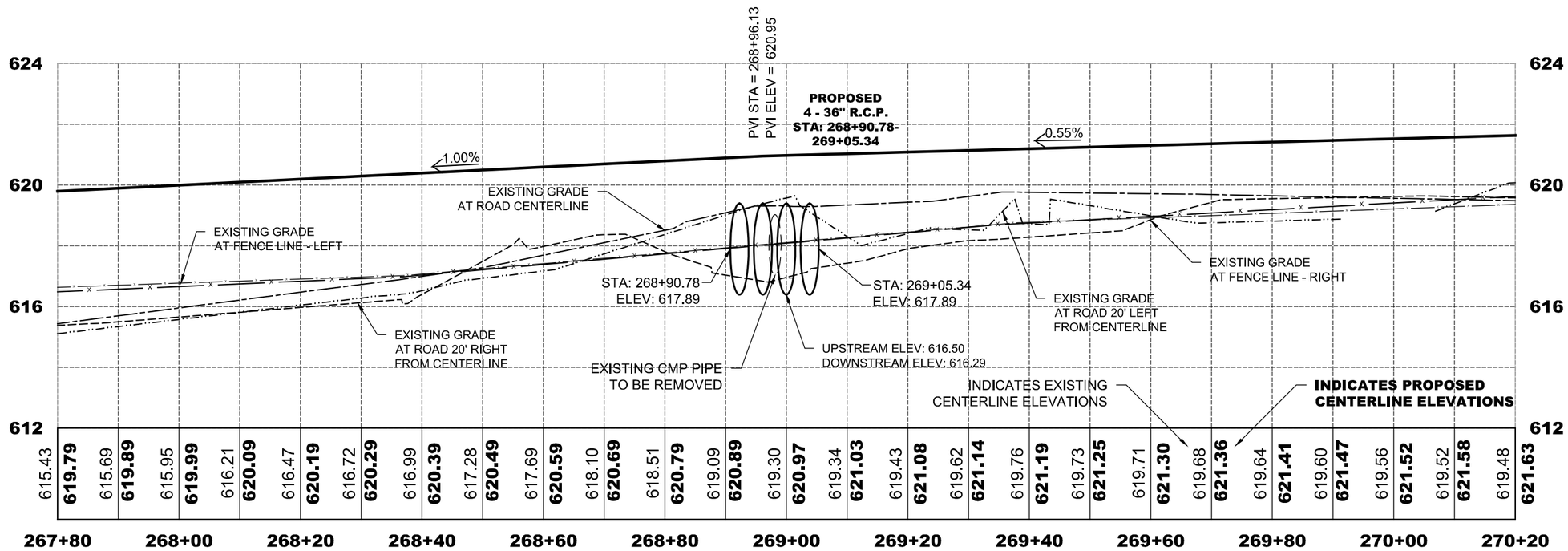

ESPEJO GATES PROFILE R.C.P. STA 269+00.00
HORIZONTAL SCALE: 1" = 20'
VERTICAL SCALE: 1" = 4'

NO.	DATE	DESCRIPTION
1	---	---
2	---	---

REVISION

PLOTTED 6-6-2016

STATUS FINAL

STATE OF TEXAS
FRANCISCO RAMOS
108833
PROFESSIONAL LICENSED ENGINEER

DRAWN BY O.C. CHECKED BY J.A.M.

6/6/2016

S&B INFRASTRUCTURE, LTD.
2120 BLAINE ST. LAREDO, TEXAS 78043
TELEPHONE: (956) 568-2561 FAX: (956) 994-0022
ENGINEERING # F-1582 SURVEYING # 10193914

ESPEJO GATES
WEBB COUNTY, TEXAS

ESPEJO GATES
R.C.P.
STA 269+00.00
DETAILED GRADING

REFERENCE FILE NAME
-
DRAWING FILE NAME
U2338-RCP-14-STA 269+00.00 ALIGN

SHEET NUMBER 136 OF 152

L:\PROJECTS\WEBB COUNTY\U2338\Webb County TXDOT CERTEZ\dwg\DETAILED CULVERTS SHEETS\U2338-RCP-14-STA 269+00.00 ALIGN.dwg

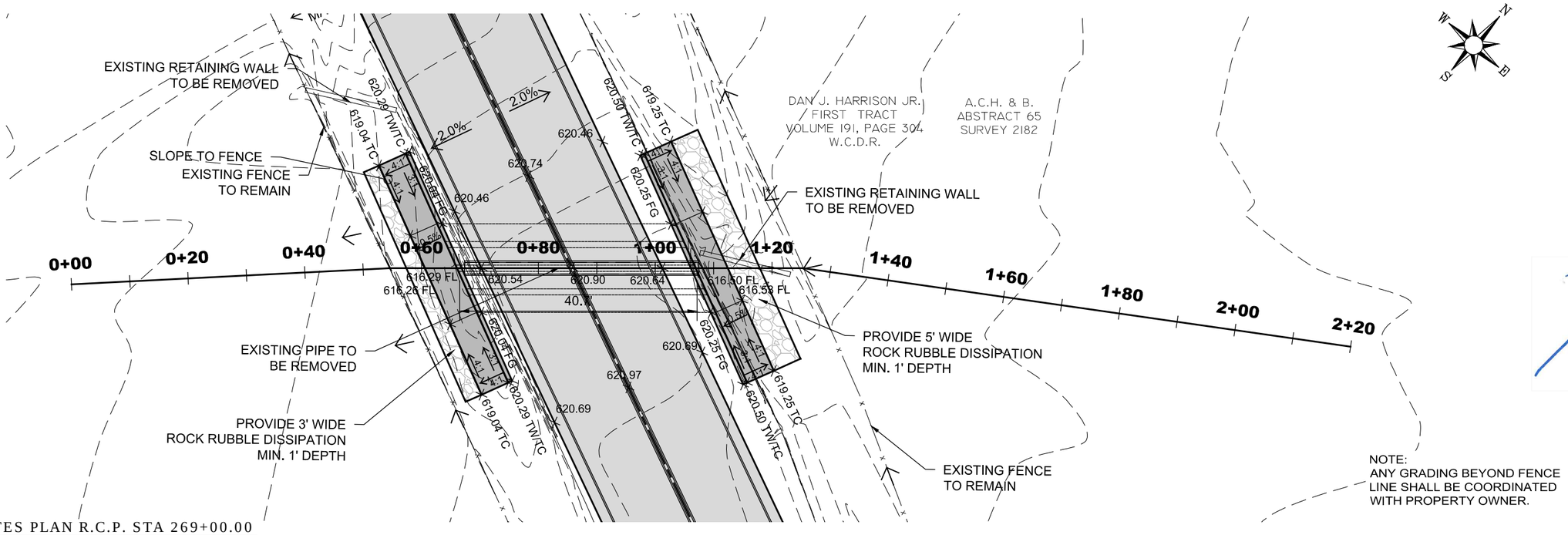

ESPEJO GATES PLAN R.C.P. STA 269+00.00

SCALE: 1" = 20'

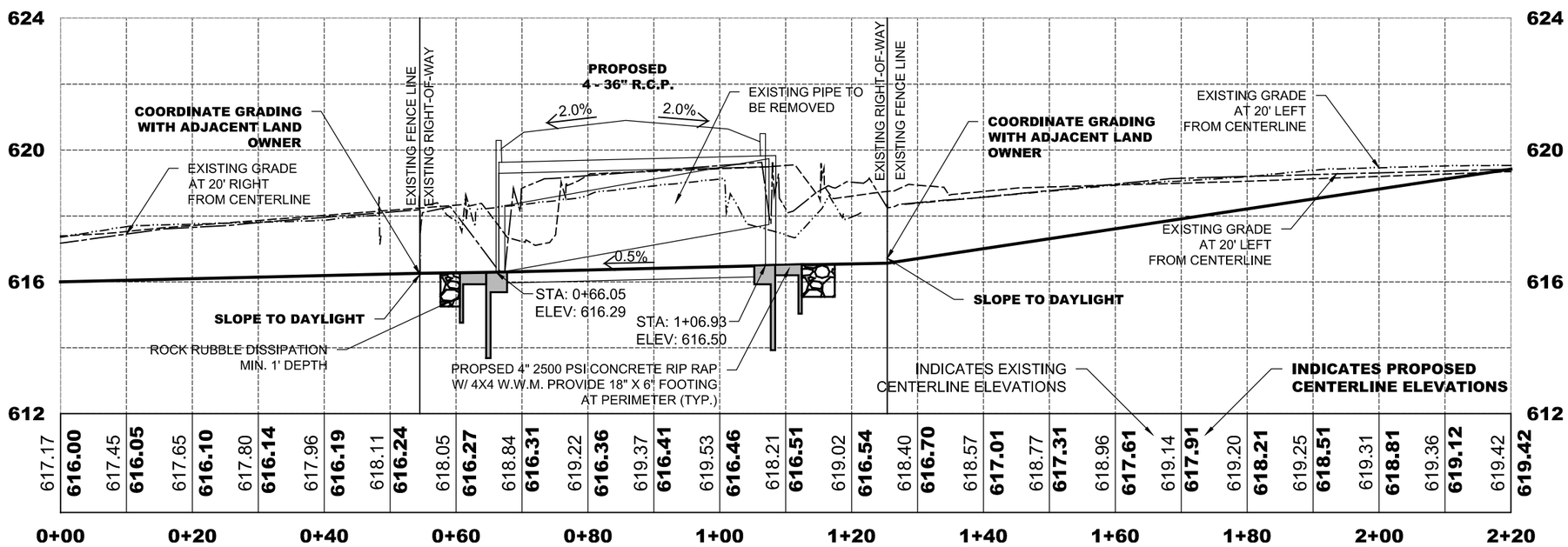

ESPEJO GATES PROFILE R.C.P. STA 269+00.00

HORIZONTAL SCALE: 1" = 20'

VERTICAL SCALE: 1" = 4'

NO.	DATE	DESCRIPTION
1	---	---
2	---	---

PLOTTED 6-6-2016

STATUS FINAL

STATE OF TEXAS
FRANCISCO RAMOS
108833
PROFESSIONAL LICENSED ENGINEER

DRAWN BY O.C. CHECKED BY J.A.M.

6/6/2016

S&B INFRASTRUCTURE, LTD.
2120 BLAINE ST. LAREDO, TEXAS 78043
TELEPHONE: (956) 568-2561 FAX: (956) 994-0027
ENGINEERING # F-1582 SURVEYING # 10193914

ESPEJO GATES
WEBB COUNTY, TEXAS

ESPEJO GATES
R.C.P.
STA 269+00.00
DETAILED GRADING

REFERENCE FILE NAME -

DRAWING FILE NAME U2338-RCP-14-STA 269+00.00 ALIGN

L:\PROJECTS\WEBB COUNTY\U2338\Webb County TXDOT CERTEZ\dwg\DETAILED CULVERTS SHEETS\U2338-RCP-14-STA 269+00.00 ALIGN.dwg

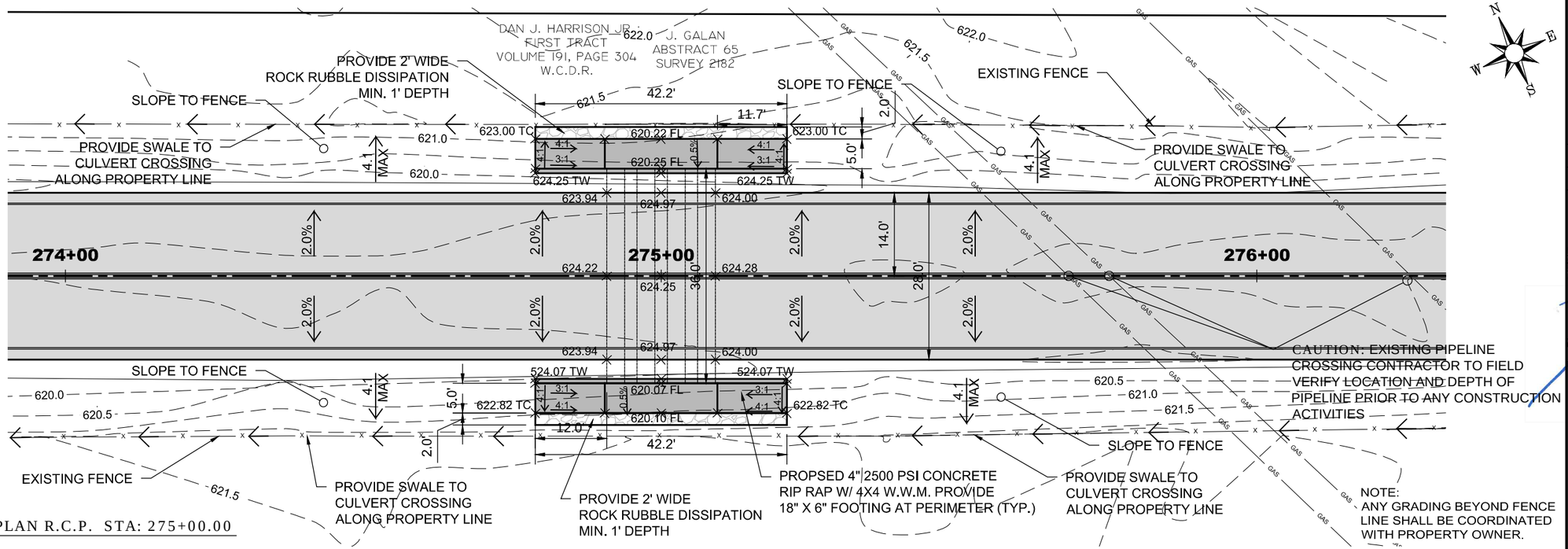

ESPEJO GATES PLAN R.C.P. STA: 275+00.00

SCALE: 1" = 20'

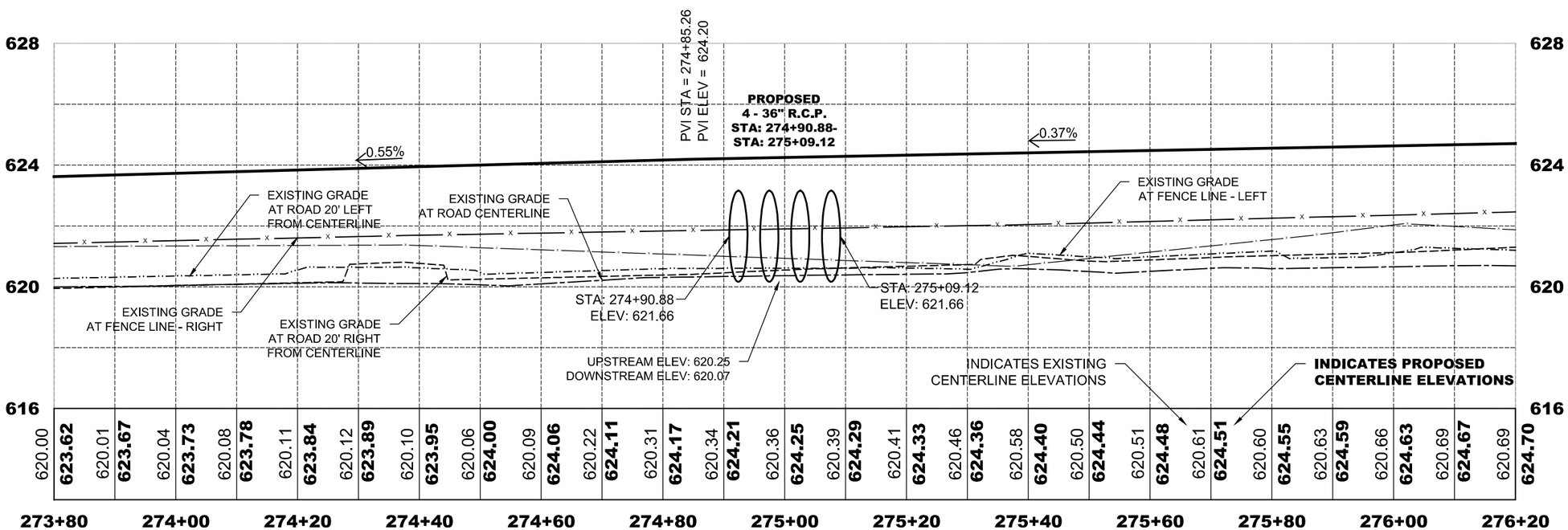

ESPEJO GATES PROFILE R.C.P. STA 275+00.00

HORIZONTAL SCALE: 1" = 20'

VERTICAL SCALE: 1" = 4'

NO.	DATE	DESCRIPTION
1	---	---
2	---	---

REVISION

PLOTTED 6-6-2016

STATUS FINAL

STATE OF TEXAS
FRANCISCO RAMOS
108833
LICENSED
PROFESSIONAL ENGINEER

DRAWN BY O.C. CHECKED BY J.A.M.

6/6/2016

S&B INFRASTRUCTURE, LTD.
2120 BLAINE ST. LAREDO, TEXAS 78043
TELEPHONE: (956) 568-2561 FAX: (956) 994-0027
ENGINEERING # F-1582 SURVEYING # 10193914

ESPEJO GATES
WEBB COUNTY, TEXAS

ESPEJO GATES
R.C.P. STA 275+00.00
DETAIL
PLAN & PROFILE

REFERENCE FILE NAME -

DRAWING FILE NAME U2338-RCP-15-STA 275+00.00 ALIGN

L:\PROJECTS\WEBB COUNTY\U2338\Webb County TXDOT CERTEZ\dwg\DETAILED CULVERTS SHEETS\U2338-RCP-15-STA 275+00.00 ALIGN.dwg

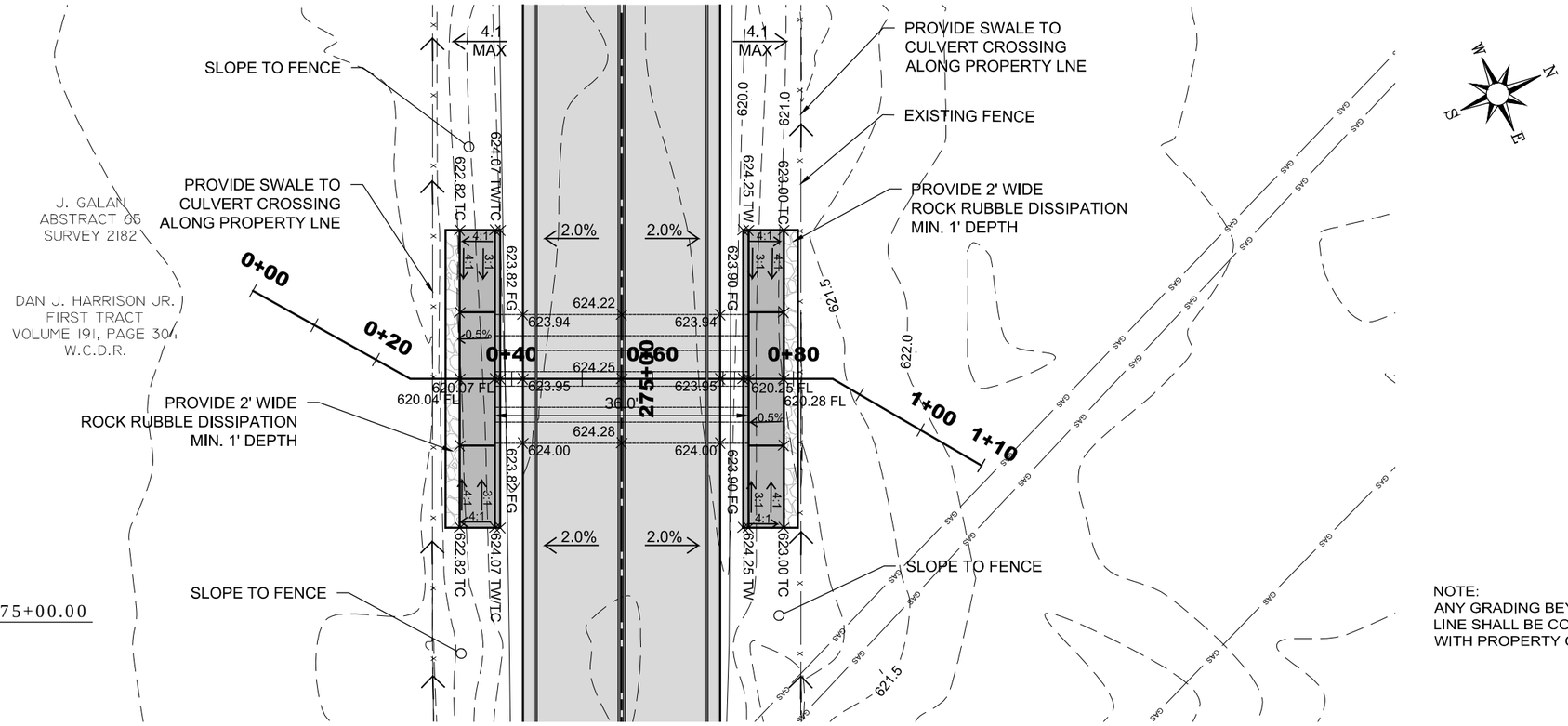

NOTE:
ANY GRADING BEYOND FENCE LINE SHALL BE COORDINATED WITH PROPERTY OWNER.

ESPEJO GATES PLAN R.C.P. STA 275+00.00
SCALE: 1" = 20'

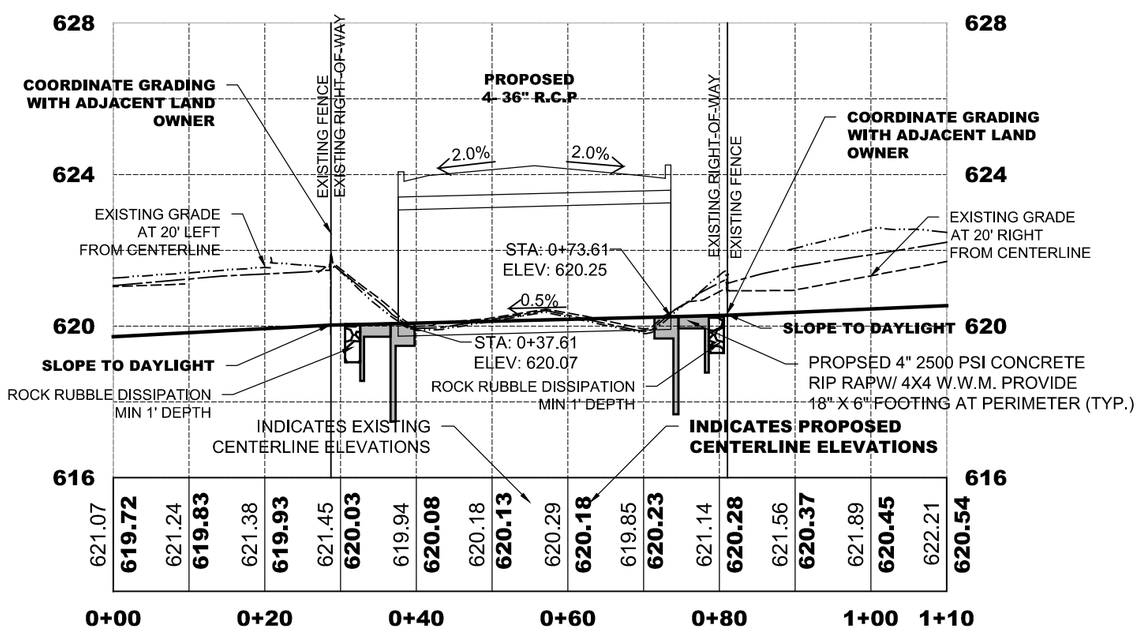

ESPEJO GATES PROFILE R.C.P. STA 275+00.00
HORIZONTAL SCALE: 1" = 20'
VERTICAL SCALE: 1" = 4'

NO.	DATE	REVISION DESCRIPTION
1	---	---
2	---	---

PLOTTED 6-6-2016
STATUS FINAL

STATE OF TEXAS
FRANCISCO RAMOS
108833
LICENSED PROFESSIONAL ENGINEER

DRAWN BY O.C. CHECKED BY J.A.M.

6/6/2016

S&B INFRASTRUCTURE, LTD.
2120 BLAINE ST. LAREDO, TEXAS 78043
TELEPHONE: (956) 568-2561 FAX: (956) 994-0022
ENGINEERING # F-1582 SURVEYING # 10193914

ESPEJO GATES
WEBB COUNTY, TEXAS

ESPEJO GATES
R.C.P.
STA 275+00.00
DETAL GRADING

REFERENCE FILE NAME -
DRAWING FILE NAME U2338-RCP-15-STA 275+00.00 ALIGN

L:\PROJECTS\WEBB COUNTY\U2338\Webb County TXDOT CERTEZ\dwg\DETAILED CULVERTS SHEETS\U2338-RCP-15-STA 275+00.00 ALIGN.dwg

TABLE OF DIMENSIONS & REINFORCING STEEL
(Wings for One Structure End)

Dimensions					Variable Reinforcing				Estimated (4) Quantities per ft of wing (2~Wings)		Estimated Quantities per ft of Toewall (1~Toewall)	
					Bars J1		Bars J2					
Maximum Wingwall Height Hw	W	X	Y	Z	Size	Spa	Size	Spa	Reinf (Lb/Ft)	Conc (CY/Ft)	Reinf (Lb/Ft)	Conc (CY/Ft)
2'-6"	2'-10"	10"	1'- 0"	7"	#4	1'-0"	#4	1'-0"	48.64	0.406	6.85	0.071
2'-9"	2'-10"	10"	1'- 0"	7"	#4	1'-0"	#4	1'-0"	49.31	0.424	6.85	0.071
3'-0"	2'-10"	10"	1'- 0"	7"	#4	1'-0"	#4	1'-0"	49.98	0.444	6.85	0.071
3'-3"	2'-10"	10"	1'- 0"	7"	#4	1'-0"	#4	1'-0"	53.32	0.462	6.85	0.071
3'-6"	2'-10"	10"	1'- 0"	7"	#4	1'-0"	#4	1'-0"	53.98	0.480	6.85	0.071
4'-0"	3'- 2"	1'- 2"	1'- 0"	7"	#4	1'-0"	#4	1'-0"	55.77	0.532	6.85	0.071
4'-6"	3'- 2"	1'- 2"	1'- 0"	7"	#4	1'-0"	#4	1'-0"	59.77	0.568	6.85	0.071
5'-0"	3'- 9"	1'- 7"	1'- 2"	7"	#4	1'-0"	#4	1'-0"	63.45	0.632	6.96	0.075
5'-6"	3'- 9"	1'- 7"	1'- 2"	7"	#4	1'-0"	#4	1'-0"	67.46	0.668	6.96	0.075
6'-0"	4'- 4"	2'- 0"	1'- 4"	7"	#5	1'-0"	#5	1'-0"	80.67	0.730	7.07	0.078
6'-6"	4'- 4"	2'- 0"	1'- 4"	7"	#5	1'-0"	#5	1'-0"	85.05	0.768	7.07	0.078
7'-0"	5'- 0"	2'- 3"	1'- 9"	8"	#5	1'-0"	#5	1'-0"	92.15	0.864	8.07	0.093
7'-6"	5'- 0"	2'- 3"	1'- 9"	8"	#5	1'-0"	#5	1'-0"	96.54	0.902	8.07	0.093
8'-0"	5'- 6"	2'- 8"	1'-10"	8"	#5	6"	#5	6"	139.04	0.962	8.13	0.095
8'-6"	5'- 6"	2'- 8"	1'-10"	8"	#5	6"	#5	6"	144.47	1.000	8.13	0.095
9'-6"	6'- 0"	2'-10"	2'- 2"	9"	#5	6"	#5	6"	156.93	1.136	8.41	0.110
10'-6"	6'- 5"	3'- 0"	2'- 5"	9"	#6	6"	#5	6"	196.27	1.234	8.57	0.117
11'-6"	7'- 2"	3'- 6"	2'- 8"	11"	#6	6"	#6	6"	230.13	1.438	9.52	0.140
12'-6"	7'- 8"	3'- 9"	2'-11"	1'- 0"	#7	6"	#6	6"	283.41	1.592	9.74	0.157
13'-6"	8'- 2"	4'- 0"	3'- 2"	1'- 2"	#8	6"	#6	6"	348.72	1.804	10.02	0.186
14'-6"	8'-10"	4'- 5"	3'- 5"	1'- 4"	#9	6"	#6	6"	432.94	2.046	10.30	0.218
15'-6"	9'- 6"	4'-10"	3'- 8"	1'- 6"	#9	6"	#7	6"	489.52	2.302	11.24	0.253
16'-0"	9'-11"	5'- 0"	3'-11"	1'- 7"	#9	6"	#7	6"	505.72	2.448	11.47	0.279

TABLE OF WINGWALL REINFORCING (2~Wings)

Bar	Size	No.	Spa
D1	#6	~	1'-0"
D2	#6	~	1'-0"
E1	#4	~	1'-0"
F	#4	~	1'-0"
G	#6	~	8"
M1	#4	4	~
P	#4	~	1'-0"
V	#4	~	1'-0"

TABLE OF TOEWALL REINFORCING

Bar	Size	No	Spa
J3	#4	~	1'-0"
M2	#4	2	~
E2	#4	~	1'-0"

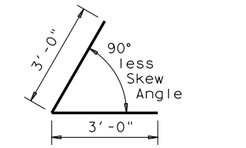

BARS D1

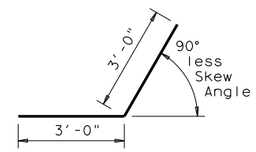

BARS D2

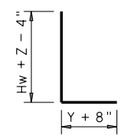

BARS J1

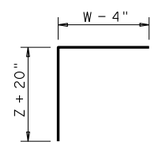

BARS J2

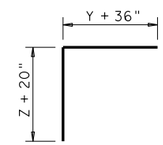

BARS J3

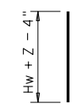

BARS V

WING DIMENSION CALCULATIONS:

Formulas: (All values are in Feet)

Hw = H + T + C
Lw = (Hw) (SL) ÷ Cosine θ for Ty PW-1
= (Hw - 1') (SL) ÷ Cosine θ for Ty PW-2 and Hw ≥ 4'
= (Hw - 0.5') (SL) ÷ Cosine θ for Ty PW-2 and Hw < 4'

For Cast-in-place culverts:
Ltw = [(N) (S) + (N + 1) (U)] ÷ Cosine θ

For Precast culverts:
Ltw = [(N) (2 U + S) + (N - 1) (0.5')] ÷ Cosine θ
Total Wingwall Area (Two Wings ~ SF)
= (2)(Hw)(Lw) for Ty PW-1
= (2)(Hw)(Lw) - 6 SF for Ty PW-2 and Hw ≥ 4'
= (2)(Hw)(Lw) - 1.5 SF for Ty PW-2 and Hw < 4'

Hw = Height of Wingwall
Lw = Length of Wingwall
Ltw = Culvert Toewall Length
N = Number of Culvert Spans
SL:1 = Channel Slope ratio. (Horizontal: 1 Vertical, Usual value is 2:1)
θ = Culvert Skew

See applicable box culvert standard for S, H, T and U values.

(1) Skew Angle = 0°

(2) At discharge end, chamfer may be ¾".

(3) For 15° Skew ~ 1"
For 30° Skew ~ 2"
For 45° Skew ~ 3"

(4) Quantities shown are for two Type PW-1 wings. Adjust concrete volume for Type PW-2 wings. To determine estimated quantities for two wings, multiply the tabulated values by Lw. Quantities shown do not include weight of Bars D.

(5) Provide weepholes for Hw = 5'-0" and greater. Fill around weepholes with coarse gravel.

(6) Extend Bars E2 1'-6" minimum into the wingwall footing.

(7) Lap Bars M1 1'-6" minimum with Bars M2.

(8) Bars G equally spaced at 8" maximum, place as shown. Provide at least two pair Bars G per wing.

(9) 0" min to 5'-0" max. Estimated curb heights are shown elsewhere in the plans. For structures with pedestrian rail, bicycle rail or curbs taller than 1'-0", refer to ECD standard. For structures with T6 bridge rail, refer to T6-CM standard. For structures with traffic rail, other than T6, refer to RAC standard.

(10) For vehicle safety, the following requirements must be met:
- For structures without bridge rail, curbs cannot project more than 3" above finished grade.
- For structures with bridge rail, build curbs flush with finished grade.

Reduce curb heights, if necessary, to meet the above requirements. No changes will be made in quantities and no additional compensation will be allowed for this work.

(11) 1'-0" typical. 2'-0" typical when RAC standard is referenced elsewhere in the plans.

(12) 3'-0" for Hw < 4'.

(13) 6" for Hw < 4'.

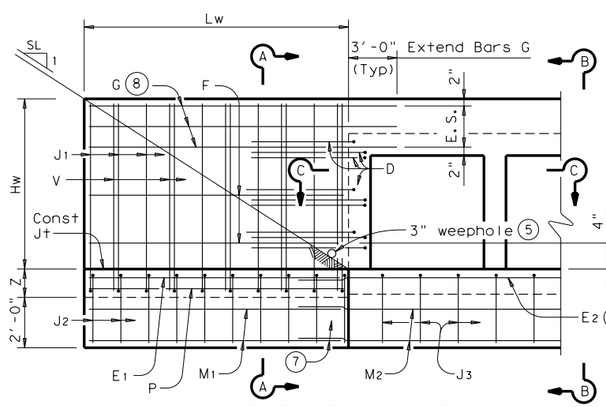

PARTIAL ELEVATION - PW-1

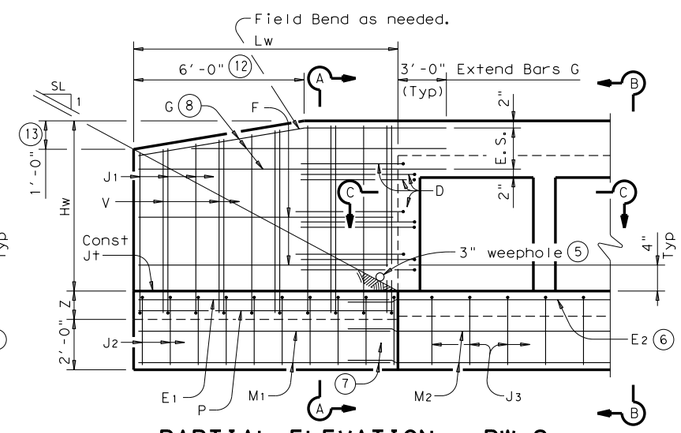

PARTIAL ELEVATION - PW-2

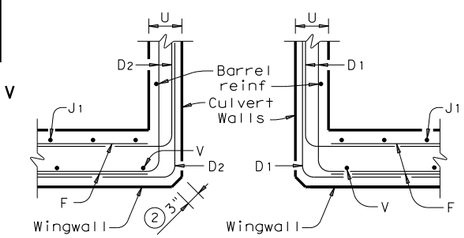

SECTION C-C

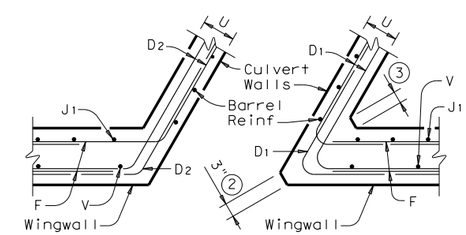

SECTION C-C

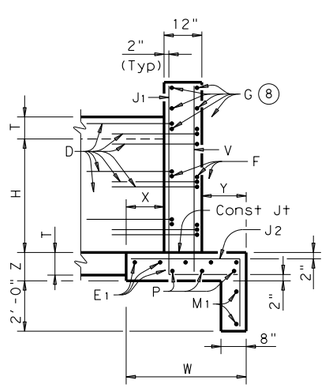

SECTION A-A
(Showing Wing Reinf)

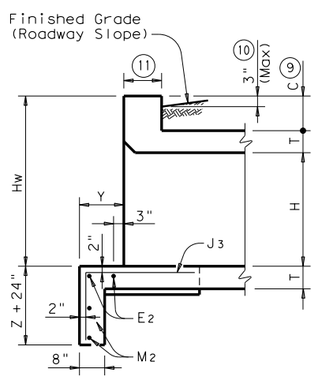

SECTION B-B
(Showing Wing Reinf)

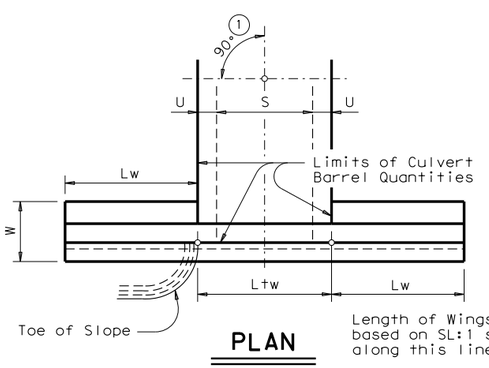

PLAN

DETAILS FOR NON-SKEWED BOX CULVERTS

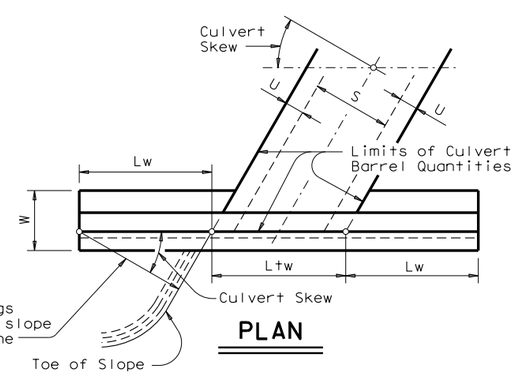

PLAN

DETAILS FOR SKEWED BOX CULVERTS
(Showing 30° Skew)

GENERAL NOTES:

Designed in accordance with AASHTO LRFD Bridge Design Specifications.

Provide Class "C" Concrete (f'c = 3,600 psi Min) and Grade 60 reinforcing steel.

Provide 1 ¼" Min clear cover to reinforcing steel.

Depth of toewalls for wingwalls and culverts may be reduced or eliminated when founded on solid rock, when directed by the Engineer.

See BCS sheet for wingwall type and additional dimensions and information.

The quantities for concrete and reinforcing steel resulting from the formulas given on this sheet are for the Contractor's information only.

DESIGNER NOTES:

Type PW-1 can be used for all applications and must be used if railing is to be mounted to the wingwall.

Type PW-2 can only be used for applications without a railing mounted to the wingwall.

Texas Department of Transportation — Bridge Division Standard

CONCRETE WINGWALLS
WITH PARALLEL WINGS FOR BOX CULVERTS
TYPES PW-1 AND PW-2

PW

FILE: pwstde01.dgn	DN: GAF	CK: CAT	DW: TxDOT	CK: GAF
©TxDOT February 2010	CONT	SECT	JOB	HIGHWAY
REVISIONS				
11-10: Reinforcing Quantities. 01-12: PW-1 & PW-2.	DIST	COUNTY		SHEET NO.
				140 OF 152

DISCLAIMER:
The use of this standard is governed by the "Texas Engineering Practice Act". No warranty of any kind is made by TxDOT for any purpose whatsoever. TxDOT assumes no responsibility for the conversion of this standard to other formats or for incorrect results or damages resulting from its use.

DATE:
FILE:

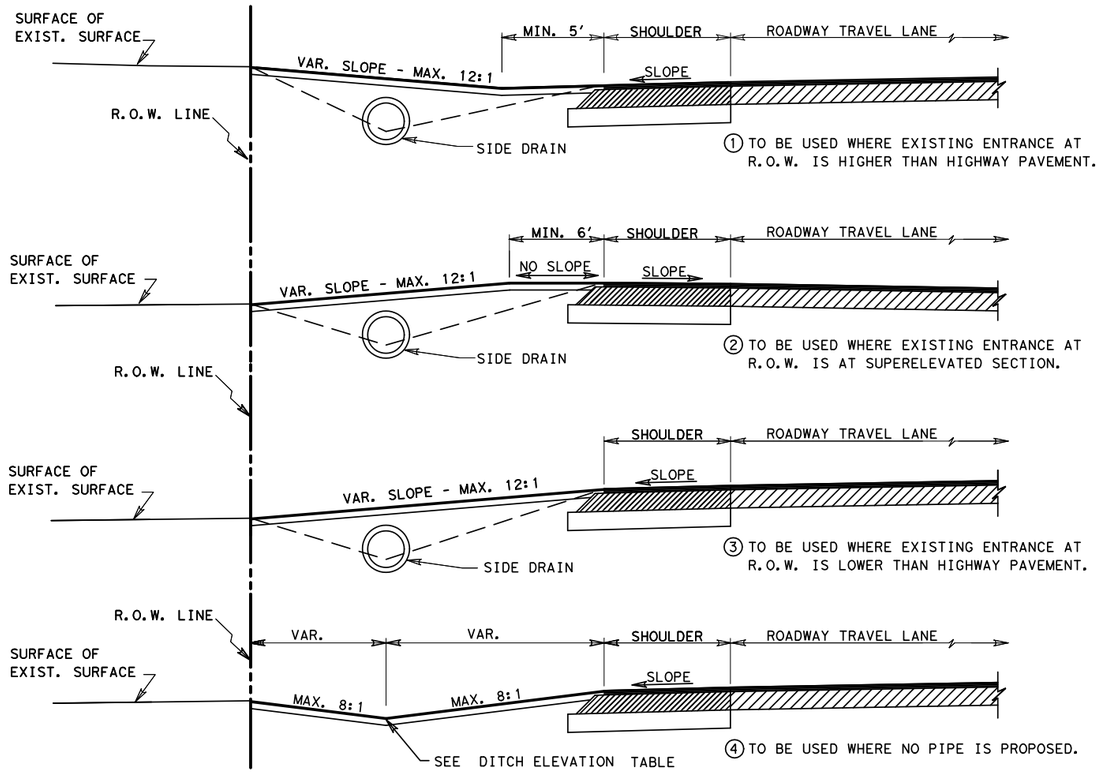

NOTES:

ALL ENTRANCES CONSTRUCTED ON THIS PROJECT ARE SUBJECT TO CONCURRENCE WITH EXISTING GOVERNING REGULATIONS AS SET OUT BY THE STATE HIGHWAY COMMISSION.

ENTRANCE'S BASE AND SURFACING MAY BE EXTENDED BEYOND R.O.W. LINE AS REQUIRED TO MEET EXISTING GRADE IN A SATISFACTORY MANNER OF WHICH NO STEEPER THAN 12:1 SLOPE WILL BE CONSTRUCTED.

ALL FLEXIBLE BASE USED FOR PRIVATE DRIVES & COMMERCIAL DRIVES WILL NOT REQUIRE LIME TREATMENT.

EXACT LOCATIONS, DIMENSIONS, AND TYPE TO BE ESTABLISHED DURING CONSTRUCTION BY THE ENGINEER.

PROP. WIDTH OF DRIVEWAYS TO MATCH EXISTING WIDTH AT R.O.W. LINE.

114 #/SY ACP (COMPACTED) IS EQUAL TO 1 IN. DEPTH
171 #/SY ACP (COMPACTED) IS EQUAL TO 1½ IN. DEPTH.

SIDE DRAINS TO BE INSTALLED WHERE ROADWAY DITCH DRAINAGE IS NECESSARY, AS INDICATED ON PLANS AND/OR AS DIRECTED BY THE ENGINEER.

SIDE DRAINS TO BE INSTALLED WITH A MINIMUM OF 12" COVER BY PROPOSED RESIDENTIAL & COMMERCIAL MATERIAL OR 15" COVER OF PROPOSED COUNTY RD. & CITY STREET ROADWAY MATERIAL.

AVERAGE DIMENSIONS SHOWN ON TABLE OF DRIVEWAYS ARE FOR ESTIMATING PURPOSES ONLY.

THE RATE OF PRIME SHALL BE 0.10 GAL/SY FOR PRIVATE AND/OR COMMERCIAL DRIVEWAYS AND 0.20 GAL/SY FOR PUBLIC DRIVEWAYS.

TYPICAL ENTRANCE PROFILE FOR DRIVEWAYS W/OUT C&G

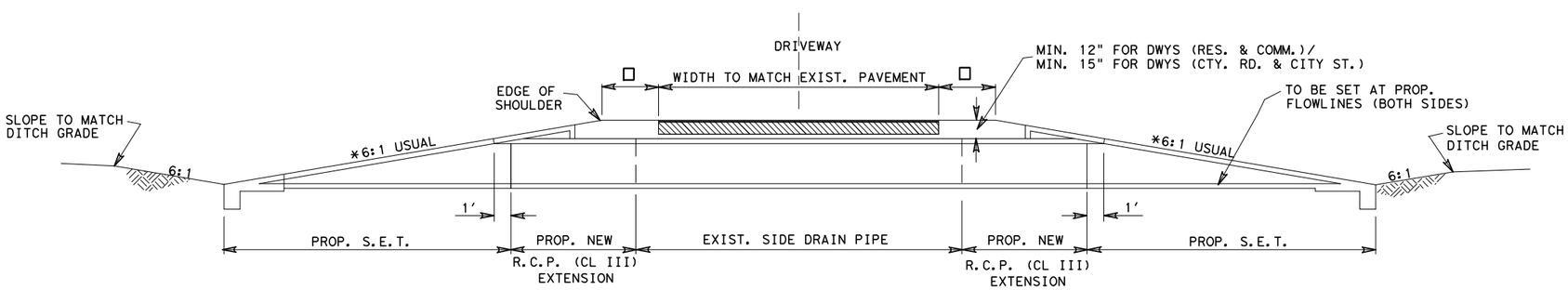

□ - 1' MIN. ON DRIVEWAYS (RES. & COMM.)
2' MIN. ON DRIVEWAYS (COUNTY RD. & CITY ST.)

* - 6:1 SLOPE USUAL
UNLESS OTHERWISE NOTED ON PLANS

© TxDOT 2005

PHARR DISTRICT STANDARD

TEXAS DEPARTMENT OF TRANSPORTATION

DRIVEWAY PROFILE DETAILS

REV. 7/13

DRIVEWAY1.DGN

FED. RD. DIV. NO.	STATE AID PROJECT NO.		FILE NO.			SHEET NO.
6						141
STATE	STATE DIST. NO.	COUNTY	CONT.	SECT.	JOB	HIGHWAY NO.
TEXAS	21	WEBB				

TABLE OF VARIABLE DIMENSIONS AND QUANTITIES FOR ONE HEADWALL (4)

SLOPE	DIA OF PIPE, D	Values for one Pipe			Values to be added for each addt'l Pipe		
		W	Reinf (Lbs)	Conc (CY) (1)	W	Reinf (Lbs)	Conc (CY) (1)
2:1	12"	9'- 0"	122	1.1	1'- 9"	15	0.2
	15"	10'- 3"	136	1.3	2'- 2"	16	0.2
	18"	11'- 6"	163	1.5	2'- 8"	19	0.3
	21"	12'- 9"	200	1.8	3'- 1"	31	0.4
	24"	14'- 0"	217	2.1	3'- 7"	34	0.4
	27"	15'- 3"	254	2.4	3'-11"	37	0.5
	30"	16'- 6"	272	2.7	4'- 4"	40	0.6
	33"	17'- 9"	314	3.1	4'- 8"	43	0.6
	36"	19'- 0"	371	3.9	5'- 1"	46	0.8
	42"	21'- 6"	442	4.9	5'-10"	52	1.0
	48"	25'- 0"	569	6.4	6'- 7"	59	1.3
	54"	27'- 6"	701	7.5	7'- 6"	82	1.6
	60"	30'- 0"	794	8.8	8'- 3"	90	1.8
	66"	32'- 6"	894	10.2	8'- 9"	96	2.0
	72"	35'- 0"	1055	11.7	9'- 4"	103	2.3
3:1	12"	13'- 0"	175	1.6	1'- 9"	14	0.2
	15"	14'- 9"	193	1.9	2'- 2"	17	0.2
	18"	16'- 6"	228	2.2	2'- 8"	19	0.3
	21"	18'- 3"	299	2.6	3'- 1"	31	0.4
	24"	20'- 0"	323	3.0	3'- 7"	33	0.4
	27"	21'- 9"	371	3.5	3'-11"	37	0.5
	30"	23'- 6"	415	4.0	4'- 4"	40	0.5
	33"	25'- 3"	469	4.6	4'- 8"	43	0.6
	36"	27'- 0"	556	5.7	5'- 1"	46	0.8
	42"	30'- 6"	675	7.1	5'-10"	52	1.0
	48"	35'- 6"	837	9.2	6'- 7"	59	1.3
	54"	39'- 0"	1015	11.0	7'- 6"	84	1.6
	60"	42'- 6"	1171	12.9	8'- 3"	91	1.8
	66"	46'- 0"	1298	14.9	8'- 9"	98	2.0
	72"	49'- 6"	1561	17.1	9'- 4"	103	2.3
4:1	12"	17'- 0"	229	2.0	1'- 9"	15	0.2
	15"	19'- 3"	266	2.4	2'- 2"	17	0.2
	18"	21'- 6"	308	2.9	2'- 8"	19	0.3
	21"	23'- 9"	382	3.5	3'- 1"	31	0.3
	24"	26'- 0"	430	3.9	3'- 7"	34	0.4
	27"	28'- 3"	486	4.7	3'-11"	37	0.5
	30"	30'- 6"	539	5.2	4'- 4"	40	0.6
	33"	32'- 9"	603	6.0	4'- 8"	42	0.6
	36"	35'- 0"	738	7.5	5'- 1"	47	0.8
	42"	39'- 6"	881	9.3	5'-10"	52	1.0
	48"	46'- 0"	1102	12.1	6'- 7"	61	1.3
	54"	50'- 6"	1364	14.4	7'- 6"	84	1.6
	60"	55'- 0"	1547	16.9	8'- 3"	91	1.8
	66"	59'- 6"	1741	19.5	8'- 9"	98	2.0
	72"	64'- 0"	2069	22.4	9'- 4"	102	2.3
6:1	12"	25'- 0"	336	3.0	1'- 9"	14	0.2
	15"	28'- 3"	384	3.6	2'- 2"	17	0.2
	18"	31'- 6"	452	4.2	2'- 8"	19	0.3
	21"	34'- 9"	581	5.1	3'- 1"	31	0.4
	24"	38'- 0"	644	5.8	3'- 7"	34	0.4
	27"	41'- 3"	737	6.9	3'-11"	37	0.5
	30"	44'- 6"	807	7.7	4'- 4"	39	0.6
	33"	47'- 9"	912	8.9	4'- 8"	44	0.6
	36"	51'- 0"	1108	11.0	5'- 1"	48	0.8
	42"	57'- 6"	1318	13.7	5'-10"	54	1.0
	48"	67'- 0"	1674	17.9	6'- 7"	59	1.3
	54"	73'- 6"	2064	21.3	7'- 6"	83	1.6
	60"	80'- 0"	2343	24.9	8'- 3"	89	1.8
	66"	86'- 6"	2635	28.9	8'- 9"	96	2.0
	72"	93'- 0"	3123	33.1	9'- 4"	101	2.3

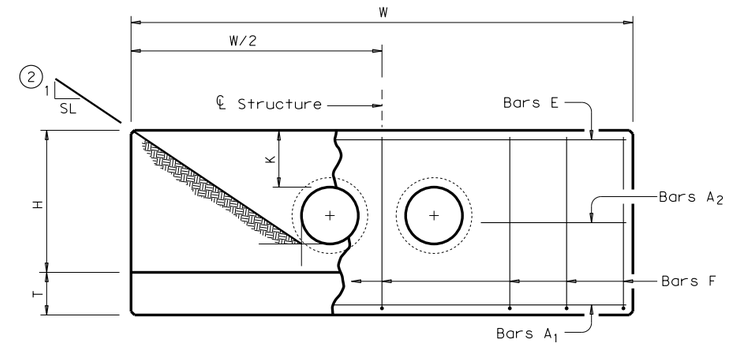

ELEVATION

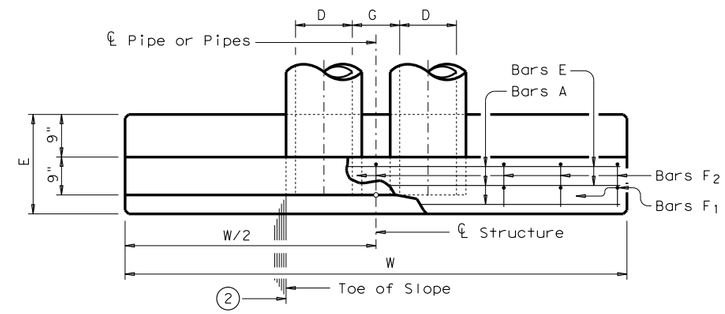

PLAN OF NON-SKEWED PIPES

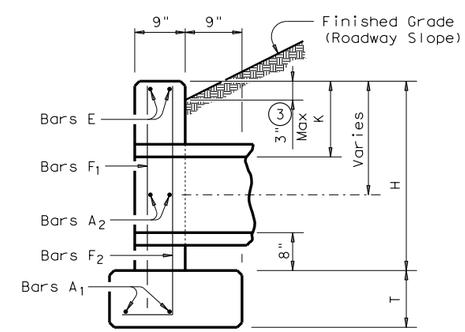

℄ SECTION

TABLE OF CONSTANT DIMENSIONS

DIA OF PIPE, D	G	K	H	T	E
12"	9"	1'- 0"	2'- 8"	9"	1'- 9"
15"	11"	1'- 0"	2'-11"	9"	1'- 9"
18"	1'- 2"	1'- 0"	3'- 2"	9"	1'- 9"
21"	1'- 4"	1'- 0"	3'- 5"	9"	2'- 0"
24"	1'- 7"	1'- 0"	3'- 8"	9"	2'- 0"
27"	1'- 8"	1'- 0"	3'-11"	9"	2'- 3"
30"	1'-10"	1'- 0"	4'- 2"	9"	2'- 3"
33"	1'-11"	1'- 0"	4'- 5"	9"	2'- 6"
36"	2'- 1"	1'- 0"	4'- 8"	1'- 0"	2'- 6"
42"	2'- 4"	1'- 0"	5'- 2"	1'- 0"	2'- 9"
48"	2'- 7"	1'- 3"	5'-11"	1'- 0"	3'- 0"
54"	3'- 0"	1'- 3"	6'- 5"	1'- 0"	3'- 3"
60"	3'- 3"	1'- 3"	6'-11"	1'- 0"	3'- 6"
66"	3'- 3"	1'- 3"	7'- 5"	1'- 0"	3'- 9"
72"	3'- 4"	1'- 3"	7'-11"	1'- 0"	4'- 0"

TABLE OF REINFORCING STEEL (4)

Bar	Size	Spa	No.
A1	# 5	~	2
A2	# 5	1'-6"	~
E	# 5	~	2
F	# 5	1'-0"	~

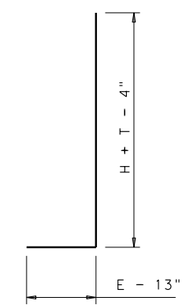

BARS F2

GENERAL NOTES:

Designed according to AASHTO LRFD Specifications.

Reinforcing steel shall be placed with the center of the outside layer of bars 2" from the surface of the concrete.

All reinforcing steel shall be Grade 60.

All concrete shall be Class "C" and shall have a minimum compressive strength of 3600 psi.

No bridge rails of any type may be mounted directly to these culvert headwalls.

(1) Quantities shown are for concrete pipe and will increase slightly for metal pipe installations.

(2) Indicated slope is perpendicular to centerline Pipe or Pipes.

(3) For vehicle safety, curbs shall project no more than 3" above finished grade. Curb heights shall be reduced, if necessary, to meet these requirements. No changes will be made in quantities and no additional compensation will be allowed for this work.

(4) Quantities shown are for one structure end only (one headwall).

DISCLAIMER:
The use of this standard is governed by the "Texas Engineering Practice Act". No warranty of any kind is made by TxDOT for any purpose whatsoever. TxDOT assumes no responsibility for the conversion of this standard to other formats or for incorrect results or damages resulting from its use.

Texas Department of Transportation — Bridge Division Standard

CONCRETE HEADWALLS WITH PARALLEL WINGS FOR NON-SKEWED PIPE CULVERTS

CH-PW-0

FILE: chpw0ste.dgn	DN: TxDOT	CK: TxDOT	DW: TxDOT	CK: GAF
©TxDOT February 2010	CONT	SECT	JOB	HIGHWAY
REVISIONS				
	DIST	COUNTY		SHEET NO.
				142 OF 152

DATE:
FILE:

TABLE OF VARIABLE DIMENSIONS AND QUANTITIES FOR ONE HEADWALL (4)

SLOPE	DIA OF PIPE, D	15 Degrees						30 Degrees						45 Degrees					
		Values for one Pipe			Values to be added for each addt'l Pipe			Values for one Pipe			Values to be added for each addt'l Pipe			Values for one Pipe			Values to be added for each addt'l Pipe		
		W	Reinf (Lbs)	Conc (CY) (1)	W	Reinf (Lbs)	Conc (CY) (1)	W	Reinf (Lbs)	Conc (CY) (1)	W	Reinf (Lbs)	Conc (CY) (1)	W	Reinf (Lbs)	Conc (CY) (1)	W	Reinf (Lbs)	Conc (CY) (1)
2:1	12"	9'- 4"	124	1.1	1'- 9 3/4"	15	0.2	10'- 5"	130	1.2	2'- 0"	16	0.2	12'- 9"	159	1.5	2'- 5 3/4"	17	0.3
	15"	10'- 7"	136	1.3	2'- 3"	17	0.2	11'-10"	159	1.5	2'- 6"	18	0.2	14'- 6"	191	1.8	3'- 0 3/4"	20	0.3
	18"	11'-11"	165	1.5	2'- 9"	19	0.3	13'- 3"	174	1.7	3'- 1"	29	0.3	16'- 3"	207	2.1	3'- 9 1/4"	33	0.4
	21"	13'- 2"	203	1.9	3'- 2 1/4"	31	0.4	14'- 9"	233	2.1	3'- 6 3/4"	33	0.4	18'- 0"	276	2.6	4'- 4 1/4"	36	0.5
	24"	14'- 6"	240	2.1	3'- 8 1/4"	34	0.4	16'- 2"	251	2.4	4'- 1 3/4"	36	0.5	19'-10"	318	2.9	5'- 0 3/4"	39	0.6
	27"	15'- 9"	258	2.5	4'- 0 3/4"	38	0.5	17'- 7"	292	2.8	4'- 6 1/4"	39	0.6	21'- 7"	342	3.4	5'- 6 1/4"	44	0.7
	30"	17'- 1"	297	2.8	4'- 5 3/4"	40	0.6	19'- 1"	311	3.1	5'- 0"	42	0.6	23'- 4"	388	3.8	6'- 1 3/4"	47	0.8
	33"	18'- 5"	320	3.3	4'- 9 3/4"	43	0.6	20'- 6"	358	3.6	5'- 4 3/4"	46	0.7	25'- 1"	439	4.4	6'- 7 1/4"	51	0.9
	36"	19'- 8"	401	4.0	5'- 3"	47	0.9	21'-11"	422	4.5	5'-10 3/4"	50	0.9	26'-10"	517	5.5	7'- 2 1/4"	55	1.2
	42"	22'- 3"	476	5.0	6'- 0 3/4"	53	1.1	24'-10"	528	5.6	6'- 8 3/4"	56	1.2	30'- 5"	634	6.9	8'- 3"	76	1.4
	48"	25'-11"	577	6.6	6'- 9 3/4"	60	1.3	28'-10"	637	7.3	7'- 7 1/4"	79	1.5	35'- 4"	791	9.0	9'- 3 3/4"	88	1.8
	54"	28'- 6"	711	7.8	7'- 9"	83	1.6	31'- 9"	781	8.7	8'- 8"	87	1.8	38'-11"	958	10.7	10'- 7 1/4"	97	2.2
	60"	31'- 1"	805	9.2	8'- 6 1/4"	91	1.9	34'- 8"	881	10.2	9'- 6 1/4"	97	2.1	42'- 5"	1113	12.5	11'- 8"	124	2.6
	66"	33'- 8"	907	10.6	9'- 0 3/4"	98	2.1	37'- 6"	1028	11.8	10'- 1 1/4"	102	2.4	46'- 0"	1235	14.5	12'- 4 1/4"	132	2.9
	72"	36'- 3"	1071	12.1	9'- 8"	105	2.4	40'- 5"	1207	13.5	10'- 9 1/4"	110	2.6	49'- 6"	1446	16.6	13'- 2 1/4"	141	3.2
3:1	12"	13'- 6"	178	1.6	1'- 9 3/4"	15	0.2	15'- 0"	189	1.8	2'- 0"	15	0.2	18'- 5"	237	2.2	2'- 5 3/4"	17	0.2
	15"	15'- 3"	212	1.9	2'- 3"	17	0.2	17'- 0"	223	2.1	2'- 6"	17	0.3	20'-10"	276	2.6	3'- 0 3/4"	20	0.3
	18"	17'- 1"	231	2.3	2'- 9"	19	0.3	19'- 1"	259	2.5	3'- 1"	29	0.3	23'- 4"	318	3.1	3'- 9 1/4"	32	0.4
	21"	18'-11"	306	2.7	3'- 2 1/4"	31	0.4	21'- 1"	339	3.0	3'- 6 3/4"	33	0.4	25'-10"	413	3.7	4'- 4 1/4"	36	0.5
	24"	20'- 8"	345	3.1	3'- 8 3/4"	35	0.4	23'- 1"	384	3.5	4'- 1 3/4"	36	0.5	28'- 3"	462	4.2	5'- 0 3/4"	40	0.6
	27"	22'- 6"	376	3.7	4'- 0 3/4"	38	0.5	25'- 1"	438	4.1	4'- 6 1/4"	39	0.6	30'- 9"	522	5.0	5'- 6 1/4"	44	0.7
	30"	24'- 4"	422	4.1	4'- 5 3/4"	40	0.6	27'- 2"	466	4.6	5'- 0"	42	0.6	33'- 3"	578	5.6	6'- 1 3/4"	47	0.8
	33"	26'- 2"	476	4.8	4'-10"	43	0.6	29'- 2"	522	5.3	5'- 4 3/4"	46	0.7	35'- 9"	644	6.5	6'- 7 1/4"	51	0.9
	36"	27'-11"	590	5.9	5'- 3 1/4"	47	0.8	31'- 2"	645	6.6	5'-10 3/4"	50	0.9	38'- 2"	787	8.0	7'- 2 1/4"	56	1.2
	42"	31'- 7"	684	7.3	6'- 0 1/4"	53	1.1	35'- 3"	776	8.2	6'- 8 3/4"	56	1.2	43'- 2"	933	10.0	8'- 3"	79	1.4
	48"	36'- 9"	880	9.6	6'- 9 3/4"	61	1.3	41'- 0"	953	10.7	7'- 7 1/4"	81	1.5	50'- 2"	1166	13.1	9'- 3 3/4"	88	1.8
	54"	40'- 5"	1065	11.4	7'- 9"	85	1.6	45'- 0"	1185	12.7	8'- 8"	89	1.8	55'- 2"	1435	15.5	10'- 7 1/4"	97	2.2
	60"	44'- 0"	1224	13.3	8'- 6 1/4"	93	1.9	49'- 1"	1356	14.8	9'- 6 1/4"	96	2.1	60'- 1"	1627	18.2	11'- 8"	124	2.6
	66"	47'- 7"	1357	15.4	9'- 1"	98	2.1	53'- 1"	1497	17.2	10'- 1 1/4"	103	2.3	65'- 1"	1834	21.1	12'- 4 1/4"	130	2.9
	72"	51'- 3"	1624	17.7	9'- 8"	105	2.3	57'- 2"	1787	19.7	10'- 9 1/4"	109	2.6	70'- 0"	2210	24.1	13'- 2 1/4"	139	3.2
4:1	12"	17'- 7"	232	2.1	1'- 9 3/4"	15	0.2	19'- 8"	259	2.4	2'- 0"	16	0.2	24'- 0"	314	2.9	2'- 5 3/4"	18	0.2
	15"	19'-11"	272	2.5	2'- 3"	17	0.2	22'- 3"	301	2.8	2'- 6"	18	0.3	27'- 3"	361	3.5	3'- 0 3/4"	21	0.3
	18"	22'- 3"	313	3.0	2'- 9"	19	0.3	24'-10"	344	3.3	3'- 1"	29	0.3	30'- 5"	427	4.0	3'- 9 1/4"	32	0.4
	21"	24'- 7"	407	3.6	3'- 2 1/4"	31	0.4	27'- 5"	446	4.0	3'- 6 3/4"	33	0.4	33'- 7"	549	4.9	4'- 4 1/4"	36	0.5
	24"	26'-11"	455	4.1	3'- 8 3/4"	35	0.4	30'- 0"	499	4.5	4'- 1 3/4"	36	0.5	36'- 9"	609	5.6	5'- 0 3/4"	40	0.6
	27"	29'- 3"	514	4.8	4'- 0 3/4"	38	0.5	32'- 7"	562	5.4	4'- 6 1/4"	40	0.6	39'-11"	703	6.6	5'- 6 1/4"	43	0.7
	30"	31'- 7"	568	5.4	4'- 5 3/4"	40	0.6	35'- 3"	620	6.0	5'- 0"	42	0.6	43'- 2"	768	7.4	6'- 1 3/4"	49	0.8
	33"	33'-11"	634	6.2	4'-10"	43	0.7	37'-10"	710	7.0	5'- 4 3/4"	46	0.7	46'- 4"	848	8.5	6'- 7 1/4"	52	0.9
	36"	36'- 3"	776	7.7	5'- 3"	48	0.9	40'- 5"	868	8.6	5'-10 3/4"	49	0.9	49'- 6"	1058	10.6	7'- 2 1/4"	56	1.1
	42"	40'-11"	921	9.6	6'- 0 1/4"	53	1.0	45'- 7"	1022	10.7	6'- 8 3/4"	57	1.2	55'-10"	1262	13.1	8'- 3"	78	1.4
	48"	47'- 7"	1152	12.6	6'-10"	61	1.3	53'- 1"	1268	14.0	7'- 7 1/4"	80	1.5	65'- 1"	1579	17.2	9'- 3 3/4"	86	1.8
	54"	52'- 3"	1416	14.9	7'- 9 1/4"	86	1.6	58'- 4"	1589	16.6	8'- 8"	89	1.8	71'- 5"	1916	20.4	10'- 7 1/4"	95	2.2
	60"	56'-11"	1606	17.5	8'- 6 3/4"	92	1.9	63'- 6"	1798	19.5	9'- 6 1/4"	95	2.1	77'- 9"	2184	23.9	11'- 8"	122	2.6
	66"	61'- 7"	1811	20.2	9'- 0 3/4"	97	2.1	68'- 8"	2011	22.5	10'- 1 1/4"	101	2.4	84'- 2"	2464	27.6	12'- 4 1/4"	131	2.9
	72"	66'- 3"	2142	23.2	9'- 8"	104	2.4	73'-11"	2371	25.9	10'- 9 1/4"	108	2.6	90'- 6"	2929	31.7	13'- 2 1/4"	138	3.2
6:1	12"	25'-11"	342	3.1	1'- 9 3/4"	15	0.2	28'-10"	374	3.5	2'- 0"	16	0.2	35'- 4"	456	4.3	2'- 5 3/4"	17	0.2
	15"	29'- 3"	390	3.7	2'- 3"	17	0.2	32'- 7"	442	4.2	2'- 6"	18	0.2	39'-11"	549	5.1	3'- 0 3/4"	20	0.3
	18"	32'- 7"	459	4.4	2'- 9"	20	0.3	36'- 4"	515	4.9	3'- 1"	29	0.3	44'- 7"	629	6.0	3'- 9 1/4"	33	0.4
	21"	36'- 0"	608	5.3	3'- 2 1/4"	31	0.4	40'- 2"	660	5.9	3'- 6 3/4"	33	0.4	49'- 2"	823	7.2	4'- 4 1/4"	38	0.5
	24"	39'- 4"	672	6.0	3'- 8 3/4"	35	0.4	43'-11"	748	6.7	4'- 1 3/4"	36	0.5	53'- 9"	920	8.2	5'- 0 3/4"	42	0.6
	27"	42'- 8"	770	7.1	4'- 0 3/4"	38	0.5	47'- 8"	852	8.0	4'- 6 1/4"	41	0.5	58'- 4"	1039	9.7	5'- 6 1/4"	45	0.7
	30"	46'- 1"	839	8.0	4'- 5 3/4"	40	0.6	51'- 5"	949	8.9	5'- 0"	44	0.6	62'-11"	1154	10.9	6'- 1 3/4"	48	0.8
	33"	49'- 5"	947	9.2	4'-10"	45	0.7	55'- 2"	1040	10.3	5'- 4 3/4"	48	0.7	67'- 6"	1284	12.6	6'- 7 1/4"	50	0.9
	36"	52'-10"	1151	11.4	5'- 3"	49	0.8	58'-11"	1287	12.7	5'-10 3/4"	51	1.0	72'- 1"	1575	15.6	7'- 2 1/4"	55	1.1
	42"	59'- 6"	1365	14.2	6'- 0 1/4"	55	1.0	66'- 5"	1522	15.8	6'- 8 3/4"	57	1.2	81'- 4"	1867	19.4	8'- 3"	76	1.4
	48"	69'- 4"	1729	18.5	6'-10"	59	1.3	77'- 4"	1934	20.7	7'- 7 1/4"	79	1.5	94'- 9"	2360	25.3	9'- 3 3/4"	86	1.8
	54"	76'- 1"	2130	22.0	7'- 9 1/4"	83	1.6	84'-10"	2370	24.6	8'- 8"	87	1.8	103'-11"	2904	30.1	10'- 7 1/4"	95	2.2
	60"	82'-10"	2414	25.8	8'- 6 3/4"	90	1.9	92'- 5"	2673	28.8	9'- 6 1/4"	94	2.1	113'-2"	3286	35.3	11'- 8"	122	2.6
	66"	89'- 7"	2712	29.9	9'- 0 3/4"	96	2.1	99'-11"	3030	33.3	10'- 1 1/4"	101	2.4	122'-4"	3689	40.8	12'- 4 1/4"	130	2.9
	72"	96'- 3"	3210	34.2	9'- 8"	102	2.4	107'-5"	3572	38.2	10'- 9 1/4"	108	2.6	131'-6"	4364	46.8	13'- 2 1/4"	139	3.2

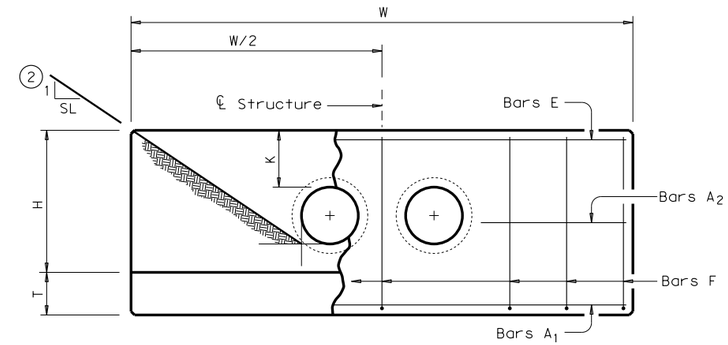

ELEVATION

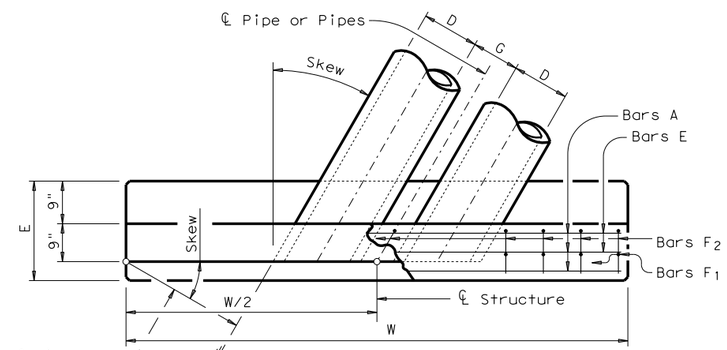

PLAN OF SKEWED PIPES

Showing 30° Skew

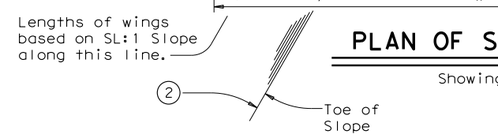

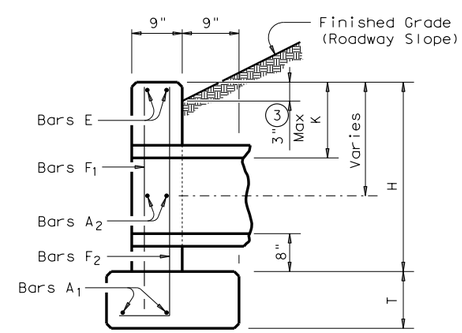

℄ SECTION

TABLE OF CONSTANT DIMENSIONS

DIA OF PIPE, D	G	K	H	T	E
12"	9"	1'- 0"	2'- 8"	9"	1'- 9"
15"	11"	1'- 0"	2'-11"	9"	1'- 9"
18"	1'- 2"	1'- 0"	3'- 2"	9"	1'- 9"
21"	1'- 4"	1'- 0"	3'- 5"	9"	2'- 0"
24"	1'- 7"	1'- 0"	3'- 8"	9"	2'- 0"
27"	1'- 8"	1'- 0"	3'-11"	9"	2'- 3"
30"	1'-10"	1'- 0"	4'- 2"	9"	2'- 3"
33"	1'-11"	1'- 0"	4'- 5"	9"	2'- 6"
36"	2'- 1"	1'- 0"	4'- 8"	1'- 0"	2'- 6"
42"	2'- 4"	1'- 0"	5'- 2"	1'- 0"	2'- 9"
48"	2'- 7"	1'- 3"	5'-11"	1'- 0"	3'- 0"
54"	3'- 0"	1'- 3"	6'- 5"	1'- 0"	3'- 3"
60"	3'- 3"	1'- 3"	6'-11"	1'- 0"	3'- 6"
66"	3'- 3"	1'- 3"	7'- 5"	1'- 0"	3'- 9"
72"	3'- 4"	1'- 3"	7'-11"	1'- 0"	4'- 0"

TABLE OF REINFORCING STEEL (4)

Bar	Size	Spa	No.
A1	# 5	~	2
A2	# 5	1'-6"	~
E	# 5	~	2
F	# 5	1'-0"	~

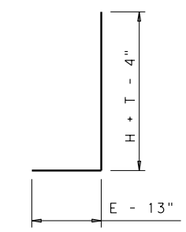

BARS F2

GENERAL NOTES:

Designed according to AASHTO LRFD Specifications.

Reinforcing steel shall be placed with the center of the outside layer of bars 2" from the surface of the concrete.

All reinforcing steel shall be Grade 60.

All concrete shall be Class "C" and shall have a minimum compressive strength of 3600 psi.

No bridge rails of any type may be mounted directly to these culvert headwalls.

(1) Quantities shown are for concrete pipe and will increase slightly for metal pipe installations.

(2) Indicated slope is perpendicular to centerline Pipe or Pipes.

(3) For vehicle safety, curbs shall project no more than 3" above finished grade. Curb heights shall be reduced, if necessary, to meet these requirements. No changes will be made in quantities and no additional compensation will be allowed for this work.

(4) Quantities shown are for one structure end only (one headwall).

Texas Department of Transportation

Bridge Division Standard

CONCRETE HEADWALLS WITH PARALLEL WINGS FOR SKEWED PIPE CULVERTS

CH-PW-S

FILE: chpwsste.dgn	DN: TxDOT	CK: TxDOT	DW: TxDOT	CK: GAF
©TxDOT February 2010	CONT	SECT	JOB	HIGHWAY
REVISIONS				
	DIST	COUNTY		SHEET NO.
				143 OF 152

DISCLAIMER:
The use of this standard is governed by the "Texas Engineering Practice Act". No warranty of any kind is made by TxDOT for any purpose whatsoever. TxDOT assumes no responsibility for the conversion of this standard to other formats or for incorrect results or damages resulting from its use.

DATE:
FILE:

DISCLAIMER:
The use of this standard is governed by the "Texas Engineering Practice Act". No warranty of any kind is made by TxDOT for any purpose whatsoever. TxDOT assumes no responsibility for the conversion of this standard to other formats or for incorrect results or damages resulting from its use.

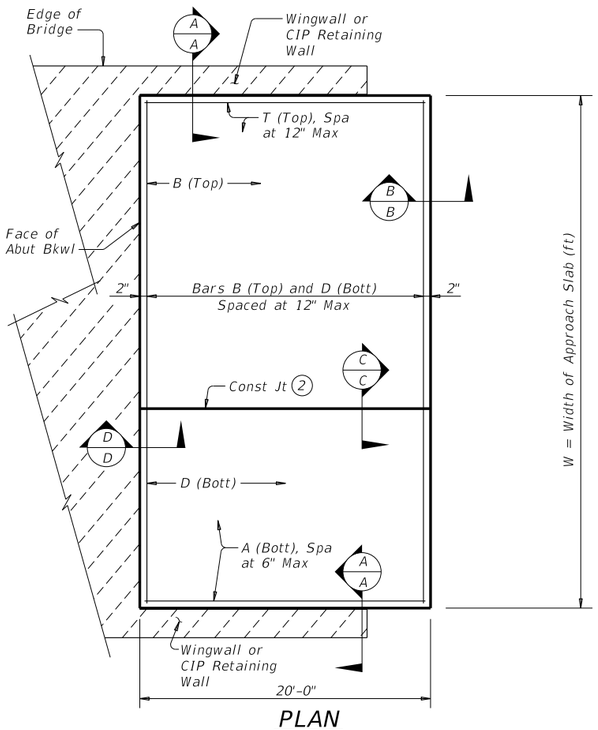

PLAN

(Showing Non-Skewed Approach Slab)

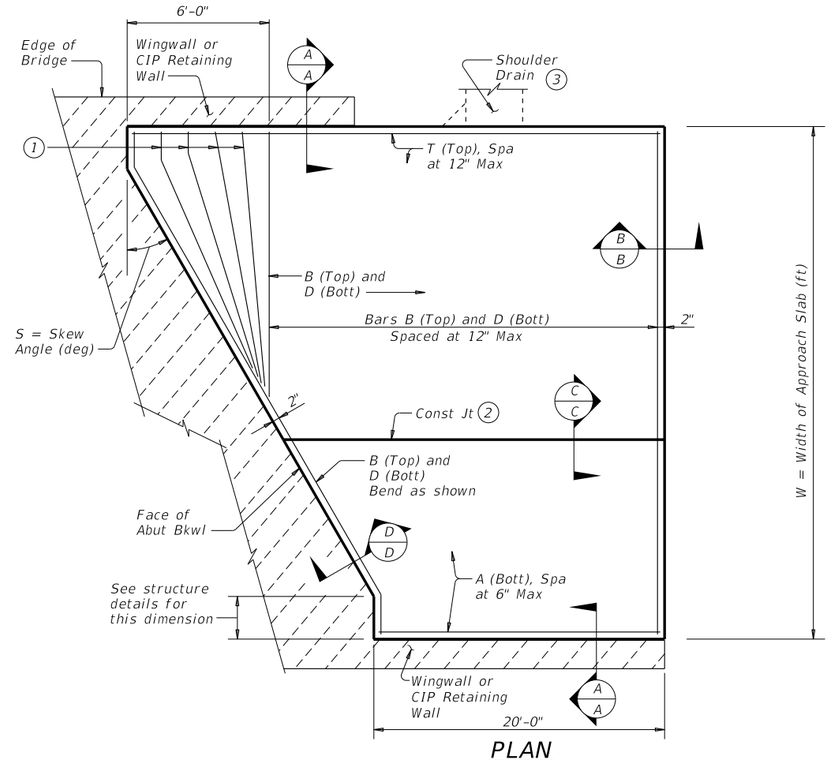

PLAN

(Showing Skewed Approach Slab)

BAR TABLE	
BAR	SIZE
A	#8
B	#5
D	#5
T	#5

APPROXIMATE QUANTITIES 4

Reinf steel weight = 8.5 Lbs/SF of Approach Slab

Volume of Appr Slab Conc (CY) = $0.802W + 0.02W^2 \tan S$

W = Width of Approach Slab (ft)

S = Skew Angle (deg)

1. Flare Bars B and D in this region (1'-6" Max Spa, 3" Min Spa). Minimum flared bar length = 2'-6". Bend bars as necessary.
2. Provide longitudinal construction joints that align with longitudinal construction joints in the bridge slab with bridges built in stages. Other longitudinal construction joints must receive approval of the Engineer.
3. See details elsewhere in plans for shoulder drain location and details.
4. For Contractor's information only.
5. Multiple piece tie bars are acceptable at longitudinal construction joints provided minimum laps shown are achieved.
6. See details elsewhere in plans for required cross-slope.
7. Place in accordance with Item 438.
8. Backer rod shall be 25% larger than joint opening and shall be compatible with the sealant.
9. Place ½" Preformed Bituminous Fiber Material between concrete railing and top of approach slab as shown when concrete railing projects over the approach slab.

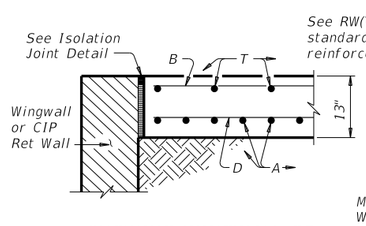

SHOWING WINGWALL OR CIP RETAINING WALL

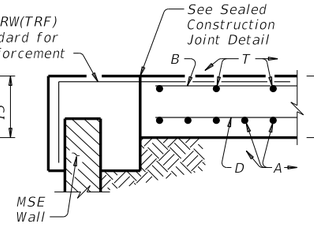

SHOWING MSE WALL

SECTION A-A

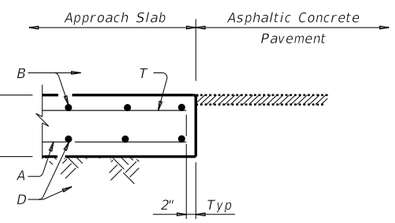

SECTION B-B

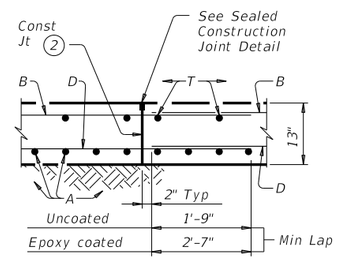

SECTION C-C 5

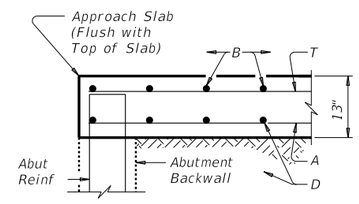

SECTION D-D

GENERAL NOTES:

Construct approach slab in accordance with Item 422.

Provide Class "S" concrete with a minimum compressive strength of 4,000 psi.

Provide Grade 60 reinforcing steel.

Construct the subgrade or subbase from the bridge for a minimum distance of 100 feet prior to the approach slab, unless otherwise indicated on the plans.

Compact and finish the subgrade or foundation for the approach slab to the typical cross-section and to the lines and grades shown on the plans.

Cure for 4 days using water or membrane curing per Item 422.

Sealant, backer rod and preformed bituminous fiber material are subsidiary to approach slab concrete.

Provide a 1" bondbreaker (asphaltic concrete pavement or asphalt stabilized base) between the approach slab and cement stabilized backfill or cement treated base. Other bondbreakers may be used if approved by the Engineer.

Cover dimensions are clear dimensions, unless noted otherwise.

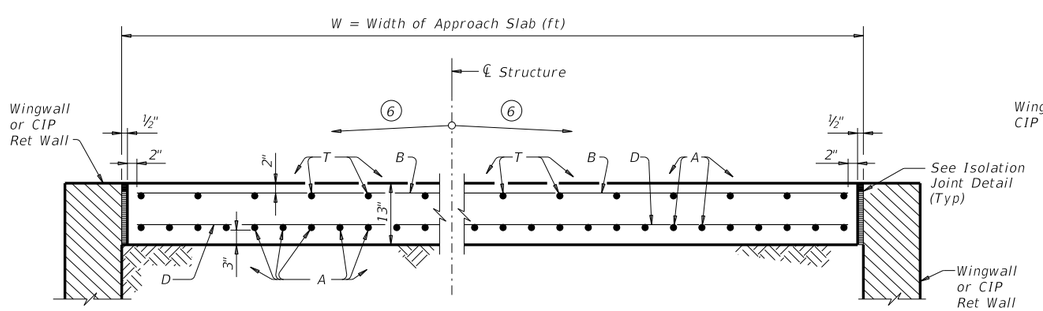

TYPICAL TRANSVERSE SECTION

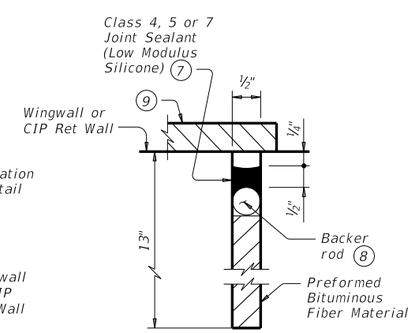

ISOLATION JOINT DETAIL

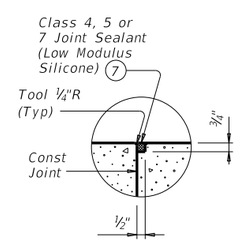

SEALED CONSTRUCTION JOINT DETAIL

Texas Department of Transportation

Bridge Division Standard

BRIDGE APPROACH SLAB

ASPHALTIC CONCRETE PAVEMENT

BAS-A

FILE: basaste1.dgn	DN: TxDOT	CK: TxDOT	DW: TxDOT	CK: TxDOT
©TxDOT January 2015	CONT	SECT	JOB	HIGHWAY
REVISIONS	DIST		COUNTY	SHEET NO.
				144 OF 152

DATE:
FILE:

DISCLAIMER:
The use of this standard is governed by the "Texas Engineering Practice Act". No warranty of any kind is made by TxDOT for any purpose whatsoever. TxDOT assumes no responsibility for the conversion of this standard to other formats or for incorrect results or damages resulting from its use.

BOX DATA

SECTION DIMENSIONS S (ft)	H (ft)	T_T (in)	T_B (in)	T_S (in)	Fill Height (ft)	M (Min) (in)	REINFORCING (in²/ft) ② A_{S1}	A_{S2}	A_{S3}	A_{S4}	A_{S5}	A_{S6}	A_{S7}	A_{S8}	① Lift Weight (Tons)
3	2	7	6	4	<2	-	0.17	0.25	0.16	0.10	0.17	0.17	0.17	0.14	3.3
3	2	4	4	4	2<3	31	0.13	0.19	0.18	0.10	-	-	-	-	2.4
3	2	4	4	4	3-5	31	0.10	0.11	0.12	0.10	-	-	-	-	2.4
3	2	4	4	4	10	31	0.10	0.10	0.10	0.10	-	-	-	-	2.4
3	2	4	4	4	15	31	0.10	0.13	0.13	0.10	-	-	-	-	2.4
3	2	4	4	4	20	31	0.11	0.17	0.17	0.10	-	-	-	-	2.4
3	2	4	4	4	25	31	0.14	0.21	0.21	0.10	-	-	-	-	2.4
3	2	4	4	4	30	31	0.17	0.25	0.25	0.10	-	-	-	-	2.4
3	2	4	4	4	35	31	0.20	0.29	0.30	0.10	-	-	-	-	2.4
3	3	7	6	4	<2	-	0.17	0.27	0.17	0.10	0.17	0.17	0.17	0.14	3.7
3	3	4	4	4	2<3	31	0.10	0.22	0.21	0.10	-	-	-	-	2.8
3	3	4	4	4	3-5	31	0.10	0.14	0.14	0.10	-	-	-	-	2.8
3	3	4	4	4	10	31	0.10	0.11	0.11	0.10	-	-	-	-	2.8
3	3	4	4	4	15	31	0.10	0.14	0.15	0.10	-	-	-	-	2.8
3	3	4	4	4	20	31	0.10	0.18	0.19	0.10	-	-	-	-	2.8
3	3	4	4	4	25	31	0.10	0.23	0.23	0.10	-	-	-	-	2.8
3	3	4	4	4	30	31	0.12	0.27	0.28	0.10	-	-	-	-	2.8
3	3	4	4	4	35	31	0.14	0.32	0.32	0.10	-	-	-	-	2.8

① For Box Length = 8'-0"

② A_{S1} thru A_{S4}, A_{S7} and A_{S8} are minimum required areas of reinforcement per linear foot of box length. A_{S6} and A_{S5} are minimum required areas of reinforcement per linear foot of box width.

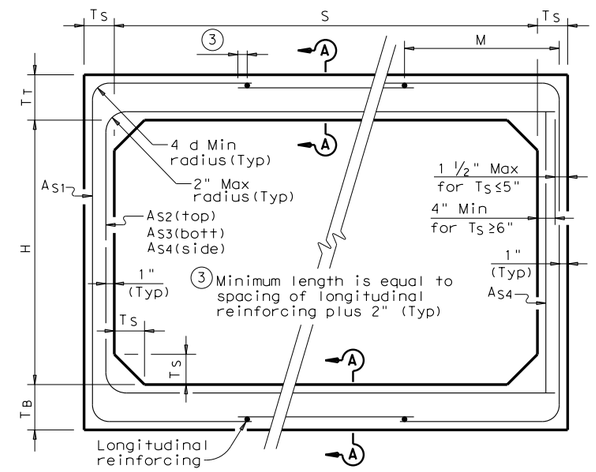

CORNER OPTION "A" CORNER OPTION "B"

FILL HEIGHT 2 FT AND GREATER

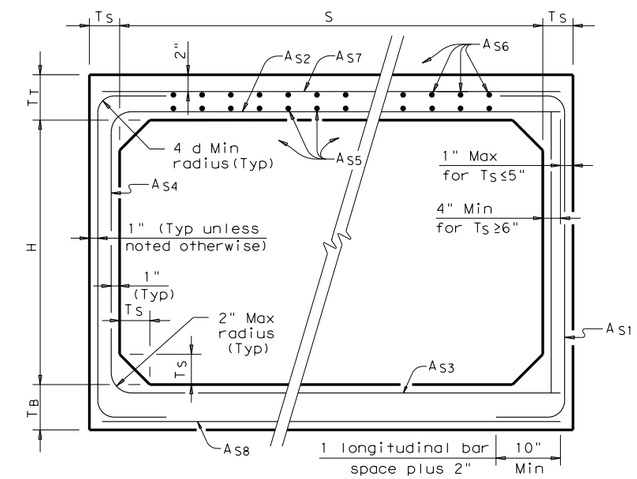

CORNER OPTION "A" CORNER OPTION "B"

FILL HEIGHT LESS THAN 2 FT

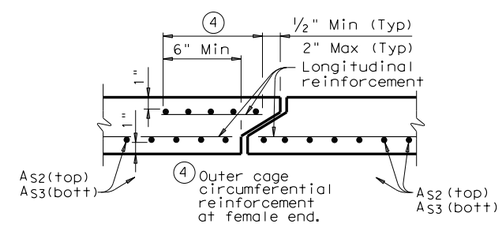

SECTION A-A

(TOP AND BOTTOM SLAB JOINT REINFORCEMENT)

GENERAL NOTES:

Designs shown conform to ASTM C1577.

Refer to ASTM C1577 for information or details not shown.

All concrete shall be Class "H" Concrete with a minimum compressive strength of 5,000 psi.

See SCP-MD standard sheet for miscellaneous details and notes not shown.

In lieu of furnishing the designs shown on this sheet, the contractor may furnish an alternate design that is equal to or exceeds the box design for the design fill height in the table. Shop plans for alternate designs shall be submitted in accordance with Item "Precast Concrete Structural Members (Fabrication)".

HL93 LOADING

Texas Department of Transportation — Bridge Division Standard

SINGLE BOX CULVERTS PRECAST

3'-0" SPAN

SCP-3

FILE: scp03sts.dgn	DN: GAF	CK: LMW	DW: BWH/TxDOT	CK: GAF
©TxDOT February 2010	CONT	SECT	JOB	HIGHWAY
REVISIONS				
	DIST	COUNTY		SHEET NO.
				145 OF 152

DATE:
FILE:

DISCLAIMER:
The use of this standard is governed by the "Texas Engineering Practice Act". No warranty of any kind is made by TxDOT for any purpose whatsoever. TxDOT assumes no responsibility for the conversion of this standard to other formats or for incorrect results or damages resulting from its use.

BOX DATA

SECTION DIMENSIONS S (ft)	H (ft)	T_T (in)	T_B (in)	T_S (in)	Fill Height (ft)	M (Min) (in)	REINFORCING (in²/ft) ② A_{S1}	A_{S2}	A_{S3}	A_{S4}	A_{S5}	A_{S6}	A_{S7}	A_{S8}	① Lift Weight (Tons)
4	2	7.5	6	5	<2	-	0.18	0.27	0.15	0.12	0.18	0.18	0.18	0.14	4.5
4	2	5	5	5	2<3	38	0.18	0.19	0.17	0.12	-	-	-	-	3.6
4	2	5	5	5	3-5	38	0.13	0.13	0.13	0.12	-	-	-	-	3.6
4	2	5	5	5	10	38	0.12	0.12	0.12	0.12	-	-	-	-	3.6
4	2	5	5	5	15	38	0.14	0.16	0.16	0.12	-	-	-	-	3.6
4	2	5	5	5	20	38	0.18	0.20	0.21	0.12	-	-	-	-	3.6
4	2	5	5	5	25	38	0.23	0.25	0.25	0.12	-	-	-	-	3.6
4	2	5	5	5	30	38	0.28	0.30	0.30	0.12	-	-	-	-	3.6
4	3	7.5	6	5	<2	-	0.18	0.31	0.18	0.12	0.18	0.18	0.18	0.14	5.0
4	3	5	5	5	2<3	38	0.15	0.23	0.20	0.12	-	-	-	-	4.1
4	3	5	5	5	3-5	38	0.12	0.16	0.16	0.12	-	-	-	-	4.1
4	3	5	5	5	10	38	0.12	0.14	0.14	0.12	-	-	-	-	4.1
4	3	5	5	5	15	38	0.12	0.18	0.18	0.12	-	-	-	-	4.1
4	3	5	5	5	20	38	0.14	0.23	0.24	0.12	-	-	-	-	4.1
4	3	5	5	5	25	38	0.17	0.29	0.29	0.12	-	-	-	-	4.1
4	3	5	5	5	30	38	0.21	0.35	0.35	0.12	-	-	-	-	4.1
4	4	7.5	6	5	<2	-	0.18	0.33	0.20	0.12	0.18	0.18	0.18	0.14	5.5
4	4	5	5	5	2<3	38	0.12	0.26	0.23	0.12	-	-	-	-	4.6
4	4	5	5	5	3-5	38	0.12	0.18	0.18	0.12	-	-	-	-	4.6
4	4	5	5	5	10	38	0.12	0.15	0.15	0.12	-	-	-	-	4.6
4	4	5	5	5	15	38	0.12	0.19	0.20	0.12	-	-	-	-	4.6
4	4	5	5	5	20	38	0.12	0.25	0.25	0.12	-	-	-	-	4.6
4	4	5	5	5	25	38	0.14	0.31	0.31	0.12	-	-	-	-	4.6
4	4	5	5	5	30	38	0.17	0.37	0.37	0.12	-	-	-	-	4.6

① For Box Length = 8'-0"

② A_{S1} thru A_{S4}, A_{S7} and A_{S8} are minimum required areas of reinforcement per linear foot of box length. A_{S6} and A_{S5} are minimum required areas of reinforcement per linear foot of box width.

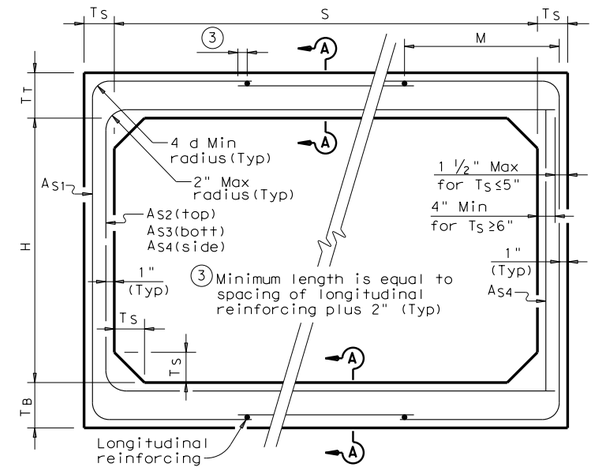

CORNER OPTION "A" CORNER OPTION "B"

FILL HEIGHT 2 FT AND GREATER

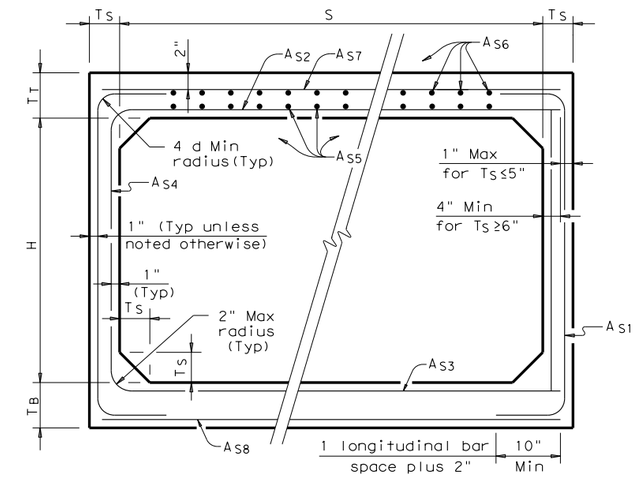

CORNER OPTION "A" CORNER OPTION "B"

FILL HEIGHT LESS THAN 2 FT

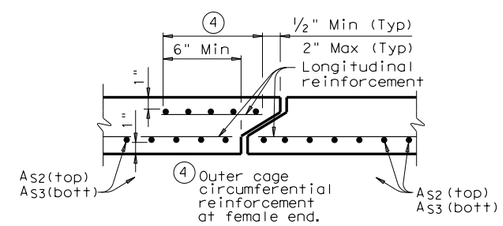

SECTION A-A

(TOP AND BOTTOM SLAB JOINT REINFORCEMENT)

GENERAL NOTES:

Designs shown conform to ASTM C1577.

Refer to ASTM C1577 for information or details not shown.

All concrete shall be Class "H" Concrete with a minimum compressive strength of 5,000 psi.

See SCP-MD standard sheet for miscellaneous details and notes not shown.

In lieu of furnishing the designs shown on this sheet, the contractor may furnish an alternate design that is equal to or exceeds the box design for the design fill height in the table. Shop plans for alternate designs shall be submitted in accordance with Item "Precast Concrete Structural Members (Fabrication)".

HL93 LOADING

Texas Department of Transportation — Bridge Division Standard

SINGLE BOX CULVERTS PRECAST

4'-0" SPAN

SCP-4

FILE: scp04sts.dgn	DN: GAF	CK: LMW	DW: BWH/TxDOT	CK: GAF
©TxDOT February 2010	CONT	SECT	JOB	HIGHWAY
REVISIONS				
	DIST	COUNTY		SHEET NO.
				146 OF 152

DATE:
FILE:

DISCLAIMER:
The use of this standard is governed by the "Texas Engineering Practice Act". No warranty of any kind is made by TxDOT for any purpose whatsoever. TxDOT assumes no responsibility for the conversion of this standard to other formats or for incorrect results or damages resulting from its use.

BOX DATA

SECTION DIMENSIONS S (ft)	H (ft)	T_T (in)	T_B (in)	T_S (in)	Fill Height (ft)	M (Min) (in)	REINFORCING (in²/ft) ② A_{S1}	A_{S2}	A_{S3}	A_{S4}	A_{S5}	A_{S6}	A_{S7}	A_{S8}	① Lift Weight (Tons)
5	3	8	7	6	<2	-	0.19	0.31	0.21	0.14	0.19	0.19	0.19	0.17	6.6
5	3	6	6	6	2<3	45	0.18	0.24	0.19	0.14	-	-	-	-	5.7
5	3	6	6	6	3-5	36	0.14	0.17	0.16	0.14	-	-	-	-	5.7
5	3	6	6	6	10	36	0.14	0.16	0.17	0.14	-	-	-	-	5.7
5	3	6	6	6	15	35	0.16	0.21	0.22	0.14	-	-	-	-	5.7
5	3	6	6	6	20	35	0.21	0.27	0.28	0.14	-	-	-	-	5.7
5	3	6	6	6	25	35	0.26	0.34	0.34	0.14	-	-	-	-	5.7
5	3	6	6	6	30	35	0.31	0.41	0.41	0.14	-	-	-	-	5.7
5	4	8	7	6	<2	-	0.19	0.33	0.24	0.14	0.19	0.19	0.19	0.17	7.2
5	4	6	6	6	2<3	45	0.16	0.27	0.22	0.14	-	-	-	-	6.3
5	4	6	6	6	3-5	45	0.14	0.19	0.18	0.14	-	-	-	-	6.3
5	4	6	6	6	10	36	0.14	0.18	0.18	0.14	-	-	-	-	6.3
5	4	6	6	6	15	35	0.14	0.23	0.24	0.14	-	-	-	-	6.3
5	4	6	6	6	20	35	0.17	0.30	0.31	0.14	-	-	-	-	6.3
5	4	6	6	6	25	35	0.21	0.37	0.38	0.14	-	-	-	-	6.3
5	4	6	6	6	30	35	0.25	0.44	0.45	0.14	-	-	-	-	6.3
5	5	8	7	6	<2	-	0.19	0.35	0.26	0.14	0.19	0.19	0.19	0.17	7.8
5	5	6	6	6	2<3	45	0.14	0.29	0.24	0.14	-	-	-	-	6.9
5	5	6	6	6	3-5	45	0.14	0.21	0.20	0.14	-	-	-	-	6.9
5	5	6	6	6	10	45	0.14	0.19	0.20	0.14	-	-	-	-	6.9
5	5	6	6	6	15	36	0.14	0.24	0.25	0.14	-	-	-	-	6.9
5	5	6	6	6	20	35	0.15	0.31	0.32	0.14	-	-	-	-	6.9
5	5	6	6	6	25	35	0.18	0.38	0.39	0.14	-	-	-	-	6.9
5	5	6	6	6	30	35	0.21	0.46	0.47	0.14	-	-	-	-	6.9
5	2	8	7	6	<2	-	0.20	0.31	0.20	0.14	0.22	0.19	0.19	0.17	6.0
5	2	6	6	6	30	44	0.39	0.33	0.34	0.14	-	-	-	-	5.1

⑤

① For Box Length = 8'-0"

② A_{S1} thru A_{S4}, A_{S7} and A_{S8} are minimum required areas of reinforcement per linear foot of box length. A_{S6} and A_{S5} are minimum required areas of reinforcement per linear foot of box width.

⑤ These designs were created by TxDOT and are not shown in the ASTM Specifications.

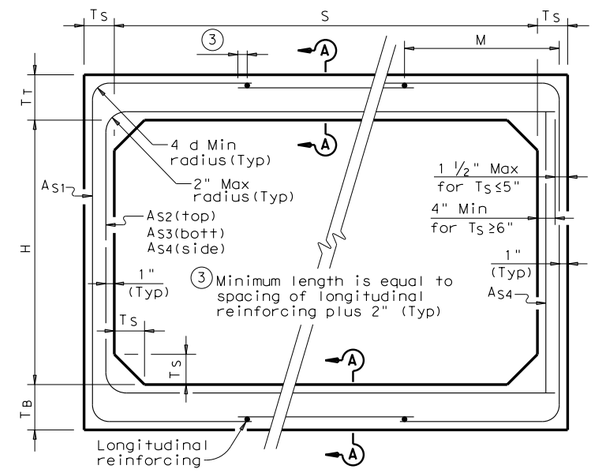

CORNER OPTION "A" CORNER OPTION "B"

FILL HEIGHT 2 FT AND GREATER

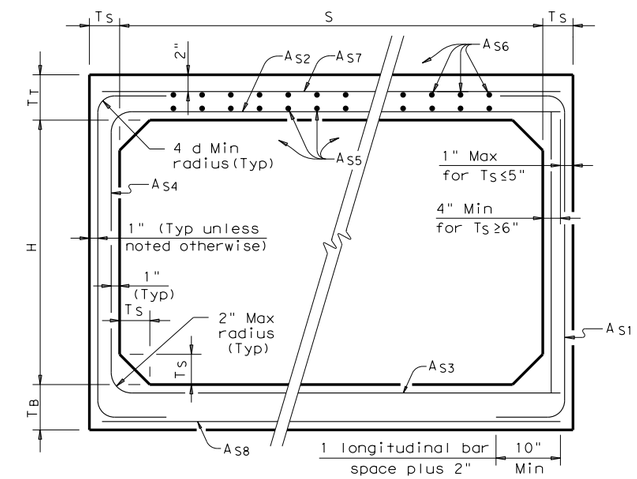

CORNER OPTION "A" CORNER OPTION "B"

FILL HEIGHT LESS THAN 2 FT

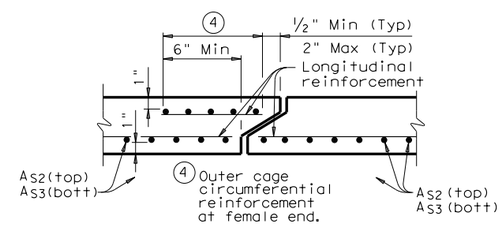

SECTION A-A

(TOP AND BOTTOM SLAB JOINT REINFORCEMENT)

GENERAL NOTES:

Designs shown conform to ASTM C1577.

Refer to ASTM C1577 for information or details not shown.

All concrete shall be Class "H" Concrete with a minimum compressive strength of 5,000 psi.

See SCP-MD standard sheet for miscellaneous details and notes not shown.

In lieu of furnishing the designs shown on this sheet, the contractor may furnish an alternate design that is equal to or exceeds the box design for the design fill height in the table. Shop plans for alternate designs shall be submitted in accordance with Item "Precast Concrete Structural Members (Fabrication)".

HL93 LOADING

Texas Department of Transportation — Bridge Division Standard

SINGLE BOX CULVERTS PRECAST

5'-0" SPAN

SCP-5

FILE: scp05sts.dgn	DN: GAF	CK: LMW	DW: BWH/TxDOT	CK: GAF
©TxDOT February 2010	CONT	SECT	JOB	HIGHWAY
REVISIONS				
	DIST	COUNTY		SHEET NO.
				147 OF 152

DATE:
FILE:

DISCLAIMER:
The use of this standard is governed by the "Texas Engineering Practice Act". No warranty of any kind is made by TxDOT for any purpose whatsoever. TxDOT assumes no responsibility for the conversion of this standard to other formats or for incorrect results or damages resulting from its use.

BOX DATA

SECTION DIMENSIONS S (ft)	H (ft)	T_T (in)	T_B (in)	T_S (in)	Fill Height (ft)	M (Min) (in)	REINFORCING (in^2/ft) ② A_{S1}	A_{S2}	A_{S3}	A_{S4}	A_{S5}	A_{S6}	A_{S7}	A_{S8}	① Lift Weight (Tons)
6	3	8	7	7	<2	-	0.20	0.31	0.22	0.17	0.19	0.19	0.19	0.17	7.9
6	3	7	7	7	2<3	43	0.21	0.24	0.19	0.17	-	-	-	-	7.5
6	3	7	7	7	3-5	39	0.17	0.18	0.17	0.17	-	-	-	-	7.5
6	3	7	7	7	10	39	0.17	0.18	0.19	0.17	-	-	-	-	7.5
6	3	7	7	7	15	38	0.22	0.24	0.24	0.17	-	-	-	-	7.5
6	3	7	7	7	20	38	0.28	0.31	0.31	0.17	-	-	-	-	7.5
6	3	7	7	7	25	38	0.35	0.38	0.39	0.17	-	-	-	-	7.5
6	3	7	7	7	30	38	0.42	0.46	0.46	0.17	-	-	-	-	7.5
6	4	8	7	7	<2	-	0.19	0.34	0.25	0.17	0.19	0.19	0.19	0.17	8.6
6	4	7	7	7	2<3	43	0.19	0.27	0.21	0.17	-	-	-	-	8.2
6	4	7	7	7	3-5	39	0.17	0.21	0.19	0.17	-	-	-	-	8.2
6	4	7	7	7	10	39	0.17	0.20	0.21	0.17	-	-	-	-	8.2
6	4	7	7	7	15	38	0.18	0.27	0.27	0.17	-	-	-	-	8.2
6	4	7	7	7	20	38	0.24	0.34	0.35	0.17	-	-	-	-	8.2
6	4	7	7	7	25	38	0.29	0.43	0.42	0.17	-	-	-	-	8.2
6	4	7	7	7	30	38	0.35	0.51	0.52	0.17	-	-	-	-	8.2
6	5	8	7	7	<2	-	0.19	0.37	0.28	0.17	0.19	0.19	0.19	0.17	9.3
6	5	7	7	7	2<3	43	0.17	0.30	0.24	0.17	-	-	-	-	8.9
6	5	7	7	7	3-5	43	0.17	0.23	0.21	0.17	-	-	-	-	8.9
6	5	7	7	7	10	39	0.17	0.22	0.23	0.17	-	-	-	-	8.9
6	5	7	7	7	15	38	0.17	0.28	0.29	0.17	-	-	-	-	8.9
6	5	7	7	7	20	38	0.20	0.37	0.38	0.17	-	-	-	-	8.9
6	5	7	7	7	25	38	0.25	0.45	0.46	0.17	-	-	-	-	8.9
6	5	7	7	7	30	38	0.30	0.54	0.55	0.17	-	-	-	-	8.9
6	6	8	7	7	<2	-	0.19	0.38	0.30	0.17	0.19	0.19	0.19	0.17	10.0
6	6	7	7	7	2<3	52	0.17	0.32	0.26	0.17	-	-	-	-	9.6
6	6	7	7	7	3-5	52	0.17	0.24	0.22	0.17	-	-	-	-	9.6
6	6	7	7	7	10	43	0.17	0.23	0.24	0.17	-	-	-	-	9.6
6	6	7	7	7	15	39	0.17	0.29	0.31	0.17	-	-	-	-	9.6
6	6	7	7	7	20	39	0.18	0.38	0.39	0.17	-	-	-	-	9.6
6	6	7	7	7	25	38	0.23	0.46	0.48	0.17	-	-	-	-	9.6
6	6	7	7	7	30	38	0.27	0.55	0.57	0.17	-	-	-	-	9.6

① For Box Length = 8'-0"

② A_{S1} thru A_{S4}, A_{S7} and A_{S8} are minimum required areas of reinforcement per linear foot of box length. A_{S6} and A_{S5} are minimum required areas of reinforcement per linear foot of box width.

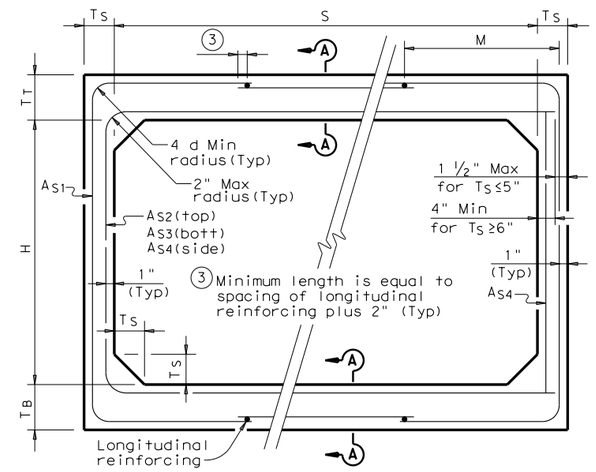

CORNER OPTION "A" CORNER OPTION "B"

FILL HEIGHT 2 FT AND GREATER

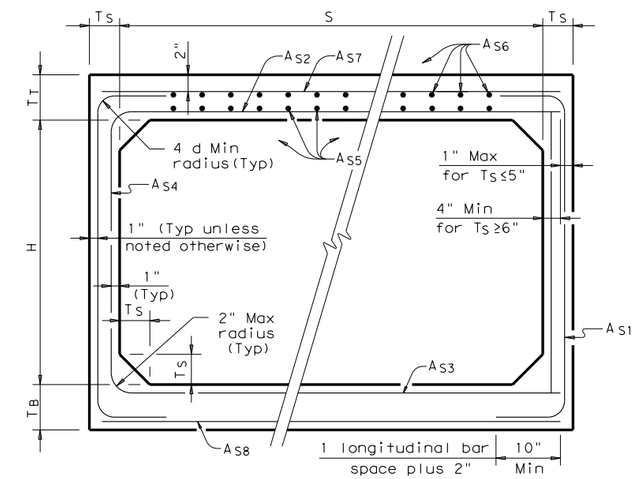

CORNER OPTION "A" CORNER OPTION "B"

FILL HEIGHT LESS THAN 2 FT

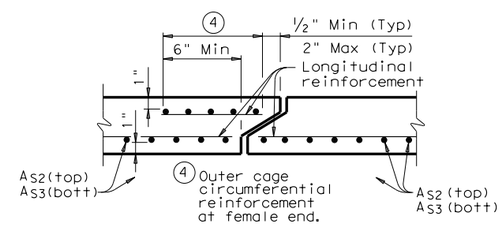

SECTION A-A

(TOP AND BOTTOM SLAB JOINT REINFORCEMENT)

GENERAL NOTES:

Designs shown conform to ASTM C1577.

Refer to ASTM C1577 for information or details not shown.

All concrete shall be Class "H" Concrete with a minimum compressive strength of 5,000 psi.

See SCP-MD standard sheet for miscellaneous details and notes not shown.

In lieu of furnishing the designs shown on this sheet, the contractor may furnish an alternate design that is equal to or exceeds the box design for the design fill height in the table. Shop plans for alternate designs shall be submitted in accordance with Item "Precast Concrete Structural Members (Fabrication)".

HL93 LOADING

Texas Department of Transportation — Bridge Division Standard

SINGLE BOX CULVERTS PRECAST

6'-0" SPAN

SCP-6

FILE: scp06sts.dgn	DN: GAF	CK: LMW	DW: BWH/TxDOT	CK: GAF
©TxDOT February 2010	CONT	SECT	JOB	HIGHWAY
REVISIONS				
	DIST	COUNTY		SHEET NO.
				148 OF 152

DATE:
FILE:

DISCLAIMER:
The use of this standard is governed by the "Texas Engineering Practice Act". No warranty of any kind is made by TxDOT for any purpose whatsoever. TxDOT assumes no responsibility for the conversion of this standard to other formats or for incorrect results or damages resulting from its use.

BOX DATA

SECTION DIMENSIONS S (ft)	H (ft)	T_T (in)	T_B (in)	T_S (in)	Fill Height (ft)	M (Min) (in)	REINFORCING (in²/ft) ② A_{S1}	A_{S2}	A_{S3}	A_{S4}	A_{S5}	A_{S6}	A_{S7}	A_{S8}	① Lift Weight (Tons)
10	5	10	10	10	<2	-	0.30	0.36	0.30	0.24	0.24	0.24	0.24	0.24	17.5
10	5	10	10	10	2<3	58	0.35	0.39	0.34	0.24	-	-	-	-	17.5
10	5	10	10	10	3-5	53	0.28	0.31	0.30	0.24	-	-	-	-	17.5
10	5	10	10	10	10	52	0.33	0.35	0.36	0.24	-	-	-	-	17.5
10	5	10	10	10	15	47	0.42	0.46	0.47	0.24	-	-	-	-	17.5
10	5	10	10	10	20	47	0.55	0.59	0.61	0.24	-	-	-	-	17.5
10	5	10	10	10	25	47	0.68	0.73	0.75	0.24	-	-	-	-	17.5
10	6	10	10	10	<2	-	0.28	0.38	0.33	0.24	0.24	0.24	0.24	0.24	18.5
10	6	10	10	10	2<3	58	0.32	0.42	0.37	0.24	-	-	-	-	18.5
10	6	10	10	10	3-5	52	0.26	0.34	0.33	0.24	-	-	-	-	18.5
10	6	10	10	10	10	52	0.30	0.38	0.39	0.24	-	-	-	-	18.5
10	6	10	10	10	15	47	0.39	0.49	0.51	0.24	-	-	-	-	18.5
10	6	10	10	10	20	47	0.50	0.63	0.65	0.24	-	-	-	-	18.5
10	6	10	10	10	25	47	0.61	0.78	0.80	0.24	-	-	-	-	18.5
10	7	10	10	10	<2	-	0.25	0.40	0.36	0.24	0.24	0.24	0.24	0.24	19.5
10	7	10	10	10	2<3	58	0.30	0.45	0.40	0.24	-	-	-	-	19.5
10	7	10	10	10	3-5	58	0.24	0.36	0.35	0.24	-	-	-	-	19.5
10	7	10	10	10	10	52	0.28	0.40	0.42	0.24	-	-	-	-	19.5
10	7	10	10	10	15	47	0.36	0.52	0.54	0.24	-	-	-	-	19.5
10	7	10	10	10	20	47	0.46	0.67	0.69	0.24	-	-	-	-	19.5
10	7	10	10	10	25	47	0.56	0.82	0.85	0.24	-	-	-	-	19.5
10	8	10	10	10	<2	-	0.24	0.41	0.38	0.24	0.24	0.24	0.24	0.24	20.5
10	8	10	10	10	2<3	64	0.27	0.47	0.43	0.24	-	-	-	-	20.5
10	8	10	10	10	3-5	58	0.24	0.38	0.38	0.24	-	-	-	-	20.5
10	8	10	10	10	10	52	0.26	0.42	0.44	0.24	-	-	-	-	20.5
10	8	10	10	10	15	47	0.34	0.54	0.57	0.24	-	-	-	-	20.5
10	8	10	10	10	20	47	0.43	0.69	0.72	0.24	-	-	-	-	20.5
10	9	10	10	10	<2	-	0.24	0.42	0.41	0.24	0.24	0.24	0.24	0.24	21.5
10	9	10	10	10	2<3	70	0.26	0.50	0.46	0.24	-	-	-	-	21.5
10	9	10	10	10	3-5	64	0.24	0.40	0.40	0.24	-	-	-	-	21.5
10	9	10	10	10	10	58	0.25	0.43	0.46	0.24	-	-	-	-	21.5
10	9	10	10	10	15	52	0.32	0.56	0.59	0.24	-	-	-	-	21.5
10	9	10	10	10	20	47	0.40	0.71	0.75	0.24	-	-	-	-	21.5
10	10	10	10	10	<2	-	0.24	0.44	0.44	0.24	0.24	0.24	0.24	0.24	22.5
10	10	10	10	10	2<3	79	0.25	0.52	0.48	0.24	-	-	-	-	22.5
10	10	10	10	10	3-5	70	0.24	0.42	0.43	0.24	-	-	-	-	22.5
10	10	10	10	10	10	64	0.24	0.44	0.48	0.24	-	-	-	-	22.5
10	10	10	10	10	15	52	0.30	0.57	0.61	0.24	-	-	-	-	22.5
10	10	10	10	10	20	52	0.38	0.73	0.77	0.24	-	-	-	-	22.5

① For Box Length = 8'-0"

② A_{S1} thru A_{S4}, A_{S7} and A_{S8} are minimum required areas of reinforcement per linear foot of box length. A_{S6} and A_{S5} are minimum required areas of reinforcement per linear foot of box width.

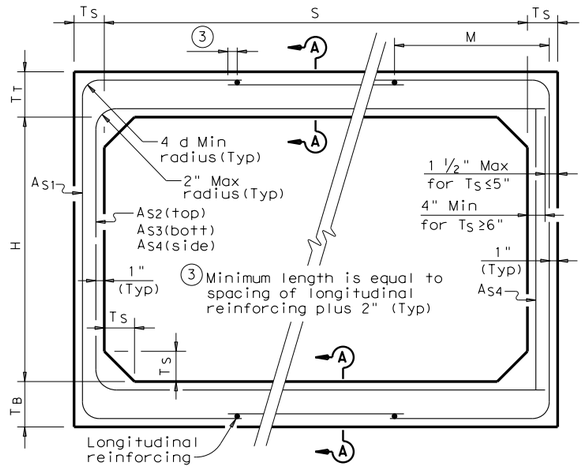

CORNER OPTION "A" CORNER OPTION "B"

FILL HEIGHT 2 FT AND GREATER

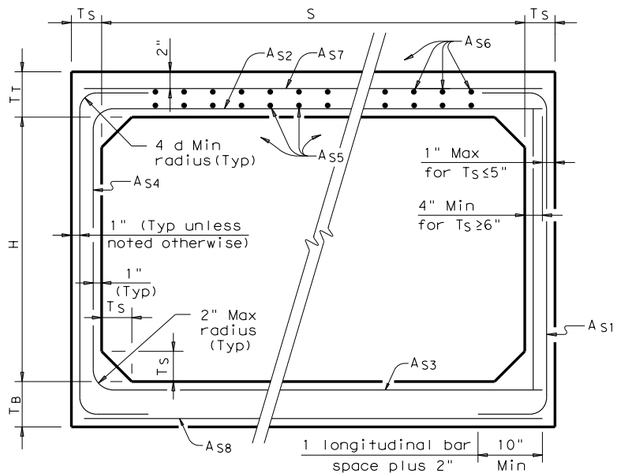

CORNER OPTION "A" CORNER OPTION "B"

FILL HEIGHT LESS THAN 2 FT

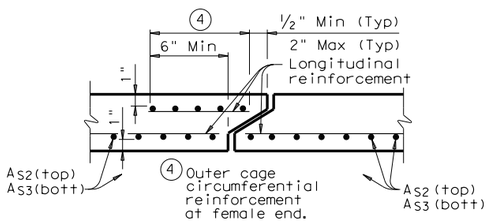

SECTION A-A

(TOP AND BOTTOM SLAB JOINT REINFORCEMENT)

GENERAL NOTES:

Designs shown conform to ASTM C1577.

Refer to ASTM C1577 for information or details not shown.

All concrete shall be Class "H" Concrete with a minimum compressive strength of 5,000 psi.

See SCP-MD standard sheet for miscellaneous details and notes not shown.

In lieu of furnishing the designs shown on this sheet, the contractor may furnish an alternate design that is equal to or exceeds the box design for the design fill height in the table. Shop plans for alternate designs shall be submitted in accordance with Item "Precast Concrete Structures".

HL93 LOADING

Texas Department of Transportation — Bridge Division Standard

SINGLE BOX CULVERTS PRECAST

10'-0" SPAN

SCP-10

FILE: scp10ste.dgn	DN: GAF	CK: LMW	DW: BWH/TxDOT	CK: GAF
©TxDOT February 2010	CONT	SECT	JOB	HIGHWAY
REVISIONS	DIST	COUNTY		SHEET NO.
				149 OF 152

DATE:
FILE:

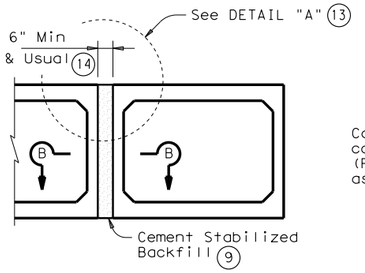

MULTIPLE UNIT PLACEMENT

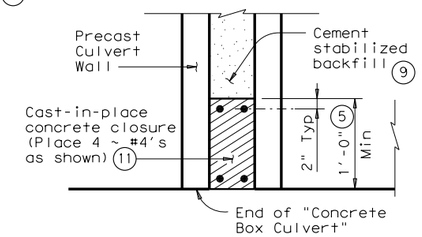

SECTION B-B

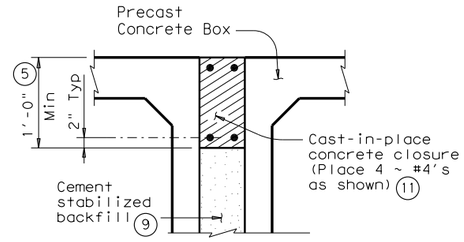

DETAIL "A" (13)

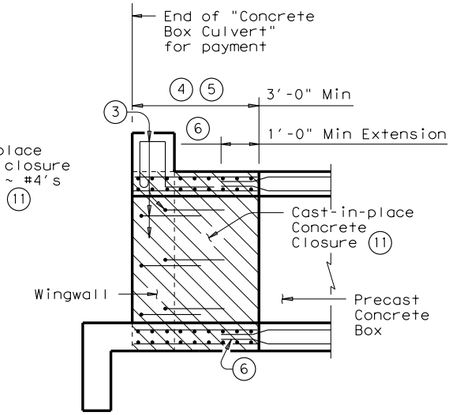

WINGWALL CONNECTION

(Also applies to Safety End Treatment)

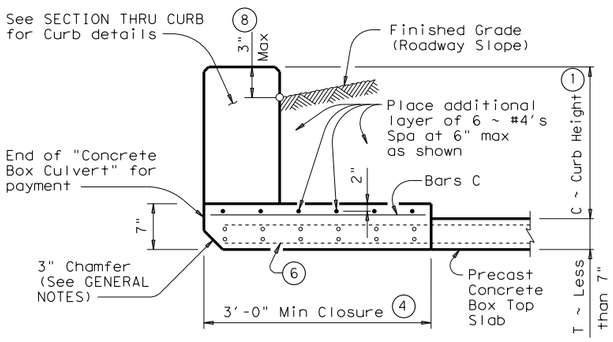

SECTION THRU TOP SLABS LESS THAN 7"

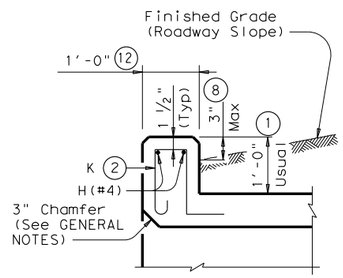

SECTION THRU CURB

(10) QUANTITIES PER FOOT OF CURB	
Reinforcing Steel	4.18 Lb
Concrete	0.037 CY

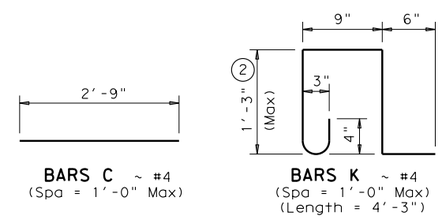

BARS C ~ #4
(Spa = 1'-0" Max)

BARS K ~ #4
(Spa = 1'-0" Max)
(Length = 4'-3")

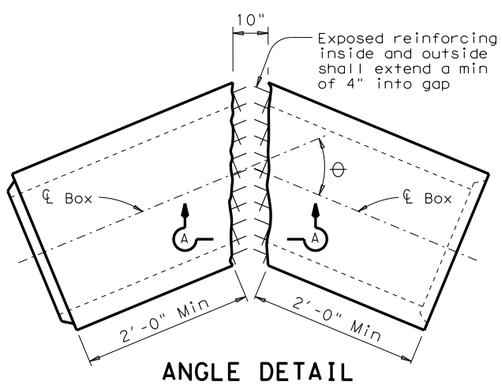

ANGLE DETAIL

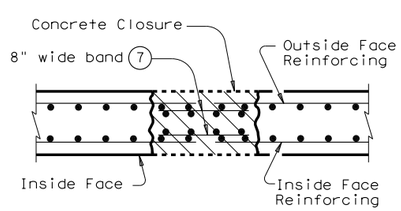

SECTION A-A

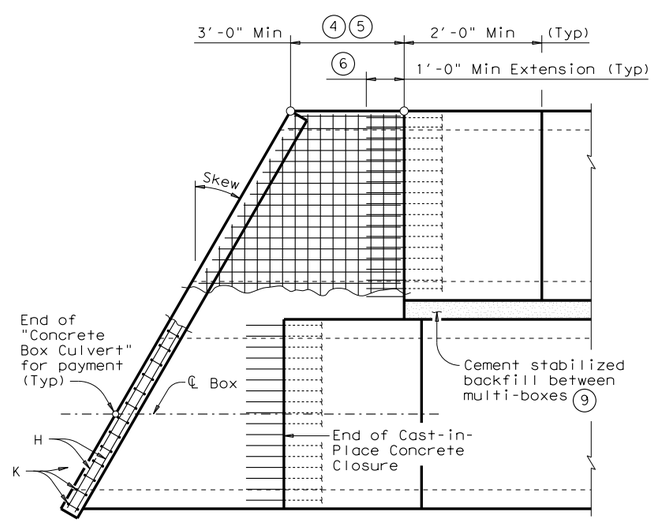

PLAN OF SKEWED ENDS

(Showing multi-box placement)

(1) 0" min to 5'-0" max. Estimated curb heights are shown elsewhere in the plans. For structures with pedestrian rail, bicycle rail or curbs taller than 1'-0", refer to ECD standard. For structures with T6 traffic rail, refer to T6-CM standard. For structures with traffic rail, other than T6, refer to RAC standard.

(2) For curbs less than 1'-0" high, tilt Bars K or reduce bar height as necessary to maintain cover. For curbs less than 3" high, Bars K may be omitted.

(3) Curb, Wingwall or Safety End Treatment reinforcing shall extend into concrete closure. Any reinforcing that does not fit into the closure shall be bent or trimmed as necessary.

(4) Cast-in-place concrete closure shall be 3'-0" min. Boxes shall be cast short or broken back in the field. All reinforcing in the closure shall be the same size and spacing as in the precast box section. Except where shown otherwise, the cast-in-place closure shall be flush with the inside and outside faces of the precast box section.

(5) For multiple unit placements the length of the closure for the interior walls may be adjusted as necessary. The length of the top slab, bottom slab, and exterior wall closure shall not be less than 3'-0". See Section B-B detail when interior walls are cast full length.

(6) Precast box reinforcing shall extend a minimum of 1'-0" into concrete closure (Typ).

(7) Bands of reinforcing matching the inside and outside face reinforcing shall be placed in the gaps of the top and bottom slabs. A band matching the outside face reinforcing of the wall shall be placed in the gaps of the walls (placed in the outside face only). The bands shall be tack welded to the exposed reinforcing at each point of contact.

(8) For vehicle safety, the following requirements must be met:
- For structures without bridge rail, curbs shall project no more than 3" above finished grade.
- For structures with bridge rail, curbs shall be flush with finished grade.

Curb heights shall be reduced, if necessary, to meet the above requirements. No changes will be made in quantities and no additional compensation will be allowed for this work.

(9) Cement Stabilized Backfill between boxes is considered part of the Box Culvert for payment.

(10) All curb concrete and reinforcing is considered part of the Box Culvert for payment.

(11) Any additional concrete and reinforcing required for the closures shall be considered as subsidiary to the Concrete Box Culvert.

(12) 1'-0" typical. 2'-0" when RAC standard is referred to elsewhere in the plans.

(13) For multiple unit placement with overlay, with 1 to 2 course surface treatment, or with the top slab as the final riding surface, provide wall closure as shown in DETAIL "A".

(14) This dimension may be increased with approval of the Engineer to allow the precast boxes to be tunneled or jacked in accordance with Item 476, "Jacking, Boring, or Tunneling Pipe or Box". No payment will be made for any additional material in the gap between adjacent boxes.

GENERAL NOTES:

Designed according to AASHTO LRFD Specifications.

All closure concrete shall be Class "C" with a minimum compressive strength of 3600 psi and shall be placed according to the Item, "Concrete Structures".

Any additional concrete required for the closures shall be considered as subsidiary to the Concrete Box Culvert.

Refer to the Single Box Culverts Precast standard for details not shown.

The bottom edge of the top slab closure shall be chamfered 3 inches at the entrance.

HL93 LOADING

Texas Department of Transportation — Bridge Division Standard

BOX CULVERTS PRECAST MISCELLANEOUS DETAILS

SCP-MD

FILE: scpmdste.dgn	DN: GAF	CK: LMW	DW: BWH/TxDOT	CK: GAF
©TxDOT February 2010	CONT	SECT	JOB	HIGHWAY
REVISIONS	DIST		COUNTY	SHEET NO.
				150 OF 152

DISCLAIMER:
The use of this standard is governed by the "Texas Engineering Practice Act". No warranty of any kind is made by TxDOT for any purpose whatsoever. TxDOT assumes no responsibility for the conversion of this standard to other formats or for incorrect results or damages resulting from its use.

DATE:
FILE:

DISCLAIMER:
The use of this standard is governed by the "Texas Engineering Practice Act". No warranty of any kind is made by TxDOT for any purpose whatsoever. TxDOT assumes no responsibility for the conversion of this standard to other formats or for incorrect results or damages resulting from its use.

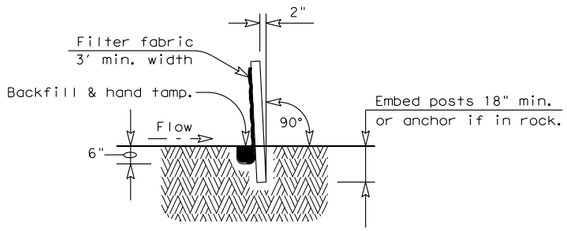

SECTION A-A

GENERAL NOTES

1. The guidelines shown hereon are suggestions only and may be modified by the Engineer.

PLAN SHEET LEGEND

Sediment Control Fence —— SCF ——

SEDIMENT CONTROL FENCE USAGE GUIDELINES

A sediment control fence may be constructed near the downstream perimeter of a disturbed area along a contour to intercept sediment from overland runoff. A 2 year storm frequency may be used to calculate the flow rate to be filtered.

Sediment control fence should be sized to filter a max. flow through rate of 100 GPM/FT^2. Sediment control fence is not recommended to control erosion from a drainage area larger than 2 acres.

Galv. Hinge joint knot woven mesh (12.5 Ga. Min.) requires a minimum of five horizontal wires spaced at a max. 12 inches apart and all vertical wires spaced at a max. 12 inches apart.

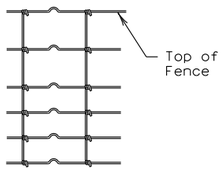

Hinge Joint Knot Woven Mesh (Option)

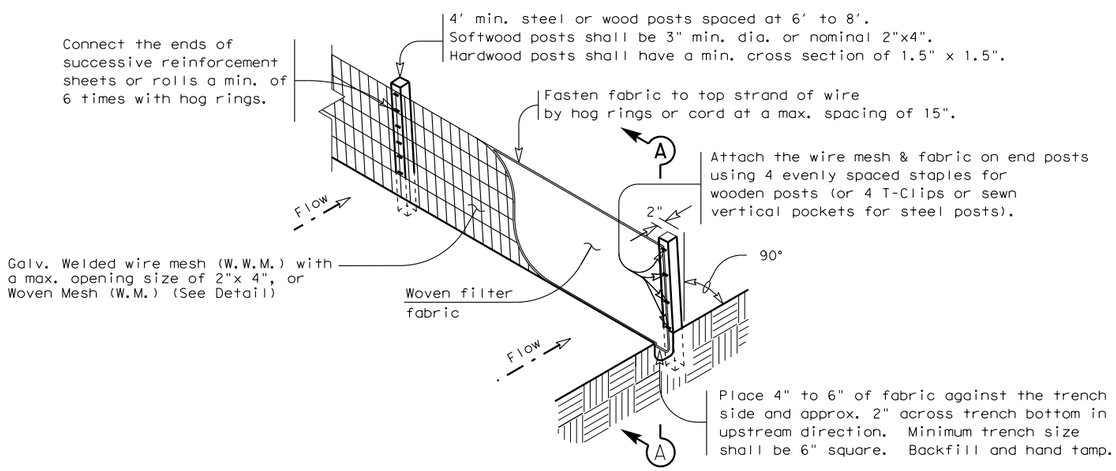

TEMPORARY SEDIMENT CONTROL FENCE

—— SCF ——

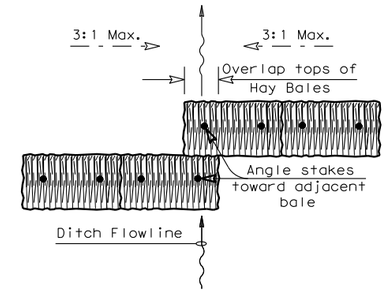

PLAN VIEW

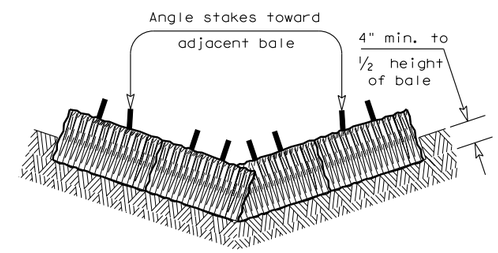

PROFILE VIEW

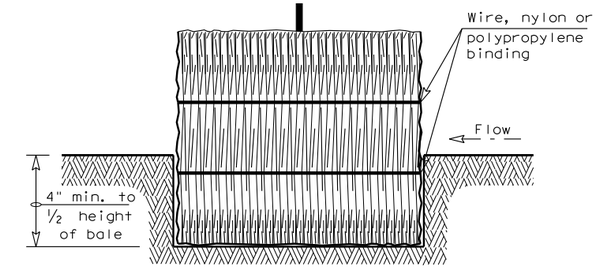

SECTION B-B

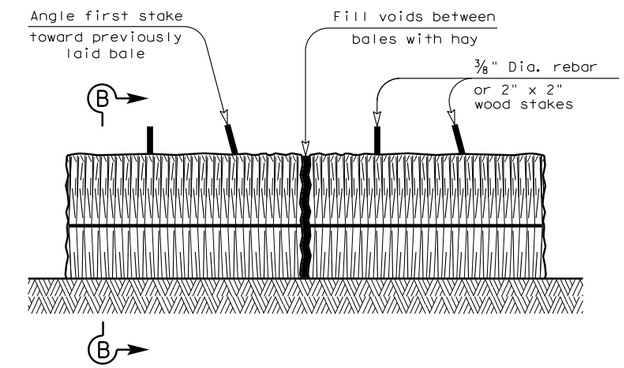

BALED HAY FOR EROSION CONTROL

—— BH ——

PLANS SHEET LEGEND

Baled Hay —— BH ——

BALED HAY USAGE GUIDELINES

A Baled Hay installation may be constructed near the downstream perimeter of a disturbed area along a contour to intercept sediment from overland runoff. A two year storm frequency may be used to calculate the flow rate to be filtered. The installation should be sized to filter a maximum flow thru rate of 5 GPM/FT^2 of cross sectional area. Baled hay may be used at the following locations:

1. Where the runoff approaching the baled hay flows over disturbed soil for less than 100'. If the slope of the disturbed soil exceeds 10%, the length of slope upstream the baled hay should be less than 50'.
2. Where the installation will be required for less than 3 months.
3. Where the contributing drainage area is less than ½ acre.

For Baled Hay installations in small ditches, the additional following considerations apply:

1. The ditch sideslopes should be graded as flat as possible to maximize the drainage flowrate thru the hay.
2. The ditch should be graded large enough to contain the overtopping drainage when sediment has filled to the top of the baled hay.

Bales should be replaced usually every 2 months or more often during wet weather when loss of structural integrity is accelerated.

GENERAL NOTES

1. Hay bales shall be a minimum of 30" in length and weigh a minimum of 50 Lbs.
2. Hay bales shall be bound by either wire or nylon or polypropylene string. The bales shall be composed entirely of vegetative matter.
3. Hay bales shall be embedded in the soil a minimum of 4" and where possible ½ the height of the bale.
4. Hay bales shall be placed in a row with ends tightly abutting the adjacent bales. The bales shall be placed with bindings parallel to the ground.
5. Hay bales shall be securely anchored in place with ⅜" Dia. rebar or 2" x 2" wood stakes, driven through the bales. The first stake shall be angled towards the previously laid bale to force the bales together.
6. The guidelines shown hereon are suggestions only and may be modified by the Engineer.

Texas Department of Transportation — Design Division Standard

TEMPORARY EROSION, SEDIMENT AND WATER POLLUTION CONTROL MEASURES

FENCE & BALED HAY

EC(1)-09

FILE: ec109.dgn	DN: TxDOT	CK: AM	DW: TV	CK: BD
© TxDOT June 1993	CONT	SECT	JOB	HIGHWAY
REVISIONS				
	DIST	COUNTY		SHEET NO.
				151 OF 152

DATE:
FILE:

DISCLAIMER:
The use of this standard is governed by the "Texas Engineering Practice Act". No warranty of any kind is made by TxDOT for any purpose whatsoever. TxDOT assumes no responsibility for the conversion of this standard to other formats or for incorrect results or damages resulting from its use.

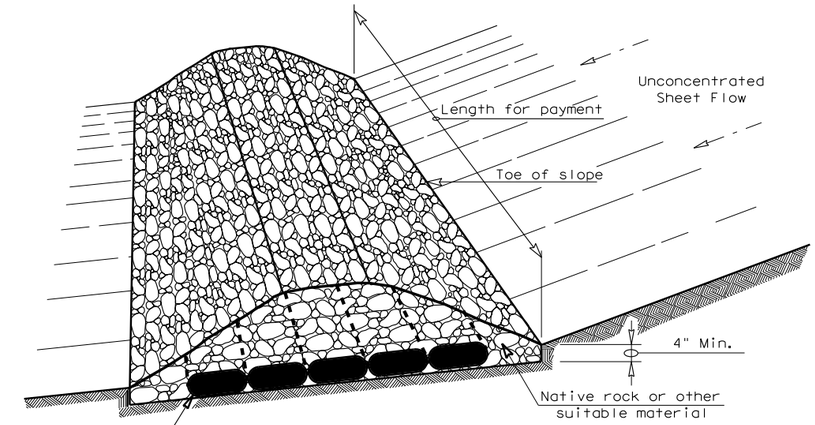

FILTER DAM AT TOE OF SLOPE

RFD1

TYPE 1

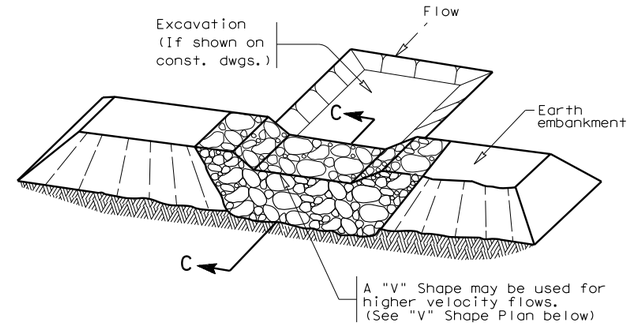

FILTER DAM AT SEDIMENT TRAP

RFD1 OR RFD2

TYPE 1 OR TYPE 2

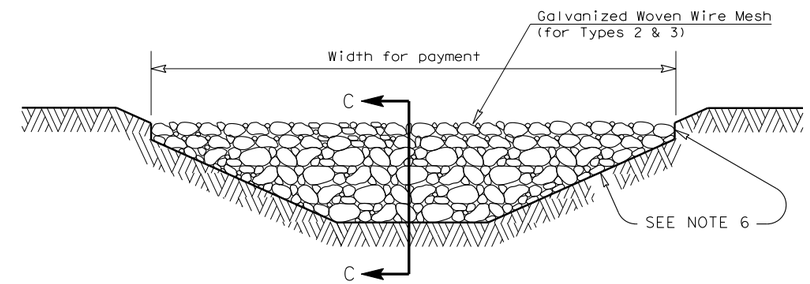

FILTER DAM AT CHANNEL SECTIONS

RFD1 OR RFD2 OR RFD3

TYPE 1 OR TYPE 2

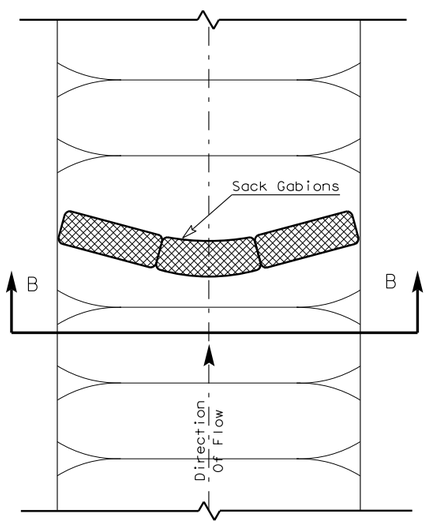

PLAN VIEW

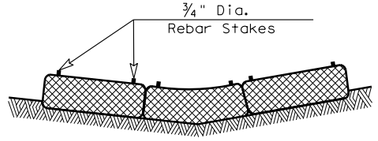

SECTION B-B

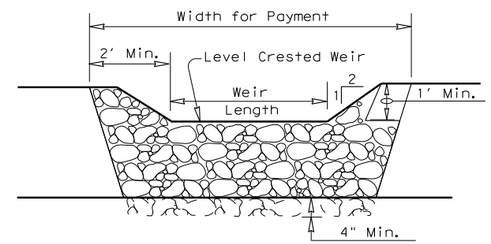

PROFILE

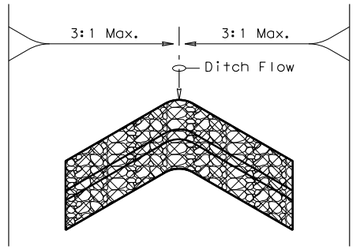

"V" SHAPE

(Plan View)

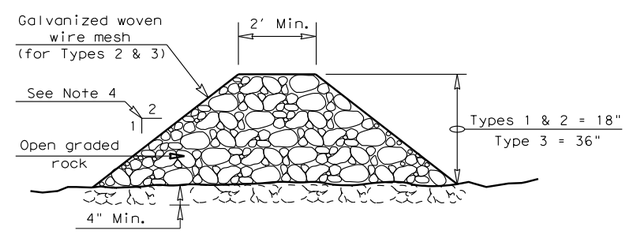

SECTION C-C

PLANS SHEET LEGEND

Type 1 Rock Filter Dam — RFD1

Type 2 Rock Filter Dam — RFD2

Type 3 Rock Filter Dam — RFD3

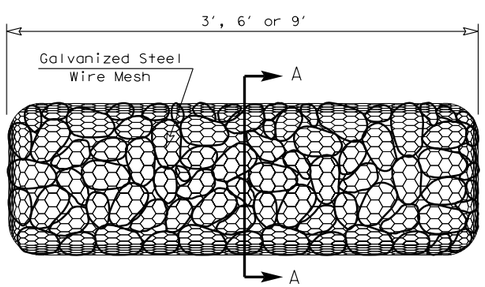

TYPE 4 (SACK GABIONS)

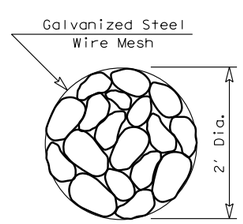

SECTION A-A

ROCK FILTER DAM USAGE GUIDELINES

Rock Filter Dams should be constructed downstream from disturbed areas to intercept sediment from overland runoff and/or concentrated flow. The dams should be sized to filter a maximum flow through rate of 60 GPM/FT^2 of cross sectional area. A 2 year storm frequency may be used to calculate the flow rate.

Type 1 (18" high with no wire mesh): Type 1 may be used at the toe of slopes, around inlets, in small ditches, and at dike or swale outlets. This type of dam is recommended to control erosion from a drainage area of 5 acres or less. Type 1 may not be used in concentrated high velocity flows (approx. 8 Ft/Sec or more) in which aggregate wash out may occur. Sandbags may be used at the embedded foundation (4" deep min.) for better filtering efficiency of low flows if called for on the plans or directed by the Engineer.

Type 2 (18" high with wire mesh): Type 2 may be used in ditches and at dike or swale outlets.

Type 3 (36" high with wire mesh): Type 3 may be used in stream flow and should be secured to the stream bed.

Type 4 (Sack gabions): Type 4 May be used in ditches and smaller channels to form an erosion control dam.

GENERAL NOTES

1. If shown on the plans or directed by the Engineer, filter dams should be placed near the toe of slopes where erosion is anticipated, upstream and/or downstream at drainage structures, and in roadway ditches and channels to collect sediment.
2. Materials (aggregate, wire mesh, sandbags, etc.) shall be as indicated by the specification for "Rock Filter Dams for Erosion and Sedimentation Control".
3. The rock filter dam dimensions shall be as indicated on the SW3P plans.
4. Side slopes should be 2:1 or flatter. Dams within the safety zone shall have sideslopes of 6:1 or flatter.
5. Maintain a minimum of 1' between top of rock filter dam weir and top of embankment for filter dams at sediment traps.
6. Filter dams should be embedded a minimum of 4" into existing ground.
7. The sediment trap for ponding of sediment laden runoff shall be of the dimensions shown on the plans.
8. Rock filter dam types 2 & 3 shall be secured with 20 gauge galvanized woven wire mesh with 1" diameter hexagonal openings. The aggregate shall be placed on the mesh to the height & slopes specified. The mesh shall be folded at the upstream side over the aggregate and tightly secured to itself on the downstream side using wire ties or hog rings. In stream use the mesh should be secured or staked to the stream bed prior to aggregate placement.
9. Sack Gabions should be staked down with ¾" dia. rebar stakes.
10. Flow outlet should be onto a stabilized area (vegetation, rock, etc.).
11. The guidelines shown hereon are suggestions only and may be modified by the Engineer.

Texas Department of Transportation — Design Division Standard

TEMPORARY EROSION, SEDIMENT AND WATER POLLUTION CONTROL MEASURES

ROCK FILTER DAMS

EC(2)-93

FILE: ec293.dgn	DN: TxDOT	CK: HEJ	DW: BD	CK:
© TxDOT June 1993	CONT	SECT	JOB	HIGHWAY
REVISIONS				
	DIST	COUNTY		SHEET NO.
				152 OF 152

DATE:
FILE:

WEBB COUNTY, TEXAS

ROADWAY IMPROVEMENTS ESPEJO GATES ROAD

PROPOSAL DOCUMENTS

COUNTY OFFICIALS

Tano E. Tijerina	**County Judge**
Frank Sciaraffa	**County Commissioner Pct. 1**
Rosaura " Wawi" Tijerina	**County Commissioner Pct. 2**
John Galo	**County Commissioner Pct. 3**
Jaime Canales	**County Commissioner Pct. 4**

JUNE 2016

S&BI INFRASTRUCTURE, LTD.
TEXAS BOARD OF PROFESSIONAL ENGINEERS #: F-1582

WEBB COUNTY
ESPEJO GATES ROADWAY IMPROVEMENTS PROJECT

TABLE OF CONTENTS

	Doc Pages
Request for Proposals.....	1
Criteria for Selection of Contractor.....	1
County of Webb Terms and Conditions of Invitations for Proposals.....	5
Texas Worker's Compensation Attachment A.....	14
Webb County Conflict of Interest Disclosure.....	1
Conflict of Interest Questionnaire.....	1
Certification Regarding Debarment, Suspension, Ineligibility & Voluntary Exclusion for Covered Contract	2
Certification Regarding Federal Lobbying	1
Proof of no Delinquent Taxes Owed to Webb County	1
Proposer Information.....	1
References.....	1
Schedule of Values.....	14
Insurance Requirements for Proposals.....	3
Notice of Award	1
Notice to Proceed.....	1
Performance and Payment Bond.....	8
Contract Time and Liquidated Damages.....	1
Suggested Form of Agreement Between Owner and Contractor for Construction Contract (Stipulated Price).....	8
Standard General Conditions of the Construction Contract	69
Supplementary Conditions	1

WEBB COUNTY
ESPEJO GATES ROADWAY IMPROVEMENTS PROJECT

Contractor's Application for Payment ……..……..... 4

Change Order …….. 1

Request for Information ……. 1

Work Change Directive …….. 3

Minor Change in the Work …… 1

Temporary Construction Sign……. 1

Governing Specifications …….. 17

Special Specifications……. 2

Guide Schedule of Sampling and Testing ..……. 29

Geotechnical Engineering Report…… 74

Request for Proposals

Sealed Proposals subject to the Terms and Conditions of this Invitation and the accompanying schedule, such other contract provisions, specifications, drawings, or other data as are attached or incorporated by reference in the schedule, for furnishing the all necessary materials, machinery, equipment, labor, superintendence, and all other services described in the accompany schedule. Proposals received after **2:00 p.m.** on the due date will not be opened. Said Proposal shall be marked:

"Webb County Roadway Improvements - Espejo Gates"
Construction Contractors for Labor and Materials
Proposal #RFP:2016-04

The Webb County is soliciting proposals for Roadway Reconstruction Improvements – Construction Contractors for Labor and Materials for approximately 27,575 feet (5.2 miles) in length of street improvements located in Webb County. Scope of work consists but not limited to: roadway reconstruction, grading, lime treatment, reworking subgrade, addition of base material, hot-mixed asphalt concrete pavement, drainage structures, roadside swales, and pavement markings.

Webb County is soliciting proposals for experienced contractors for the roadway improvements located in Webb County. The project will follow the means, methods and specifications set forth by Texas Department of Transportation (TxDOT).

Sealed Proposals will be received by:

Webb County, Texas

at the office of:

Webb County Clerk, Webb County Justice Center
110 Victoria Street, Suite 201, Laredo TX, 78040

until 2:00 PM, (as per Webb County's time clock) July 8, 2016, then immediately after publicly opened and read aloud at Webb County Clerk's Office.

A pre-proposal conference will be held at 2:00 PM, on June 29, 2016, at Webb County Purchasing Department, 1110 Washington Street, Suite 101, Laredo, Texas 78040. Representatives of Owner and Engineer will be present to discuss the Project. Contractors are encouraged to attend and participate in the conference. Engineer will transmit to all prospective Contractors of record such Addenda as Engineer considers necessary in response to questions arising at the conference.

The Official Contract Documents may be examined and/or obtained at the following website:

WWW.WEBBCOUNTY.COM/PURCHASINGAGENT/
Contractor may view, download and print, or order printed documents through this website at Contractor's expense.

Direct any questions to Frank Ramos, P.E., R.P.L.S. at 956-568-2561

Criteria for Selection of Contractor

I. Price - 70%
   a. Use price form to indicate proposed price

II. Reputation of the Contractor – 15%
   a. Provide list of three (3) references including name, telephone number and email address of each.

III. Experience of Contractor – 15%
   a. Provide list of projects currently working on.
   b. Provide list of most recently completed projects.
   c. Provide list of Webb County Projects.

IV. Proposals are to be submitted to Webb County Clerk; 1110 Victoria, Suite 201, Laredo, Texas 78040

V. Questions and answers will be posted on the website for the benefit of all interested Contractors.

VI. Selected Contractor will have to provide payment and performance bonds before Letter to Proceed is issued.

COUNTY OF WEBB

Terms and Conditions of Invitations for Proposals

1. GENERAL CONDITIONS:

Proposers are required to submit their proposals upon the following expressed conditions:

(A) Proposers shall thoroughly examine the scope of work and layouts, instructions and all other contract documents.

(B) Proposers shall make all investigations necessary to thoroughly inform themselves regarding plant and facilities for delivery of materials and equipment as required by the bid conditions. No plea of ignorance by the bidder of conditions that exist or that may hereafter exist as a result of failure to fulfill in every detail the requirements of the contract documents of the County or the compensation of the vendor.

(C) Proposers is advised that all County contracts are subject to all legal requirements provided for in county, state and federal statutes and regulations.

2. PREPARATION OF PROPOSALS:

Proposals will be prepared in accordance with the following:

(A) Unit prices shall be shown and where there is an error in extension of prices, the unit price shall govern.

(B) Alternate proposals will not be considered unless specifically requested within the proposal package.

(C) Proposed Period of Performance (POP) must be shown and shall include Sundays and holidays.

(D) Proposers will not include Federal taxes or State of Texas limited sales excise and use taxes in bid prices since the County of Webb is exempt from payment of such taxes. An exemption certificate will be signed where applicable upon request.

3. DESCRIPTION OF SUPPLIES:

Any catalog or manufacturer's reference used in describing an item is merely descriptive, and not restrictive, unless otherwise noted, and is used only to

indicate type and quality of material. Proposers are required to state exactly what they intend to furnish otherwise they shall be required to furnish the items as specified.

4. SUBMISSION OF PROPOSALS:

(A) Proposals and changes thereto shall be enclosed in sealed envelopes addressed to the Webb County Clerk. The name and address of the bidder, the date of the proposal opening and the material or service bid on shall be placed on the outside of the envelope.

(B) Proposals must be submitted in the forms furnished. Electronic proposals will not be considered. Proposals, however, may be modified by written notice provided such notice is received at the County Clerk's Office before the time and date set for the proposal opening.

(C) Samples, when required, must be submitted within the time specified, at no expense to the County of Webb. If not destroyed or used up during testing, samples will be returned upon request at the proposer expense.

5. REJECTION OF PROPOSALS:

(A) The Purchasing Agent may reject a proposal if it is deemed to be non responsive and/or provided by not responsible proposer.

(B) No proposal submitted herein shall be considered if the proposer owes any delinquent taxes to the County of Webb at the time proposals are opened. In the event that the successful proposer herein subsequently becomes delinquent in the payment of his or its County taxes, such fact shall constitute grounds for cancellation of the contract.

(C) No proposal submitted herein shall be considered unless the proposer warrants that upon execution of a contract with the County of Webb, the proposer will not engage in employment practices which have the effect of discriminating against employees or prospective employees because of race, color, sex, creed, disability, or national origin and will submit such report as the County may thereafter require to assure compliance.

(D) The County may, however, reject all proposals whenever it is deemed in the best interest of the County to do so, and may reject any part of a proposal. County may also waive any minor informalities or irregularities in any proposal.

6. WITHDRAWAL OF PROPOSALS:

Proposals may not be withdraw after the closing time and date.

7. LATE PROPOSALS OR MODIFICATIONS:

Proposals and modifications received after the time set for the proposal submission will not be considered.

8. CLARIFICATIN OR OBJECTION TO PROPOSAL SPECIFICATIONS:

If any person contemplating submitting a proposal for this contract is in doubt as to the true meaning of the specifications, or other proposal documents or any part thereof, the proposer may submit to the Purchasing Agent on or before five days prior to scheduled opening a request for clarification. All such requests for information shall be made in writing and the person submitting the request will be responsible for its prompt delivery. Any interpretation of Webb County proposal package specification instructions, if made, will be made only by Addendum duly issued. A copy of such Addendum will be posted on the web-site and email to the vendors list that have received email copy of package. The County will not be responsible for any other explanation or interpretation made or given prior to the award of the contract. Any objections to the specifications and requirements as set forth in this proposal must be filed in writing with the Purchasing Agent on or before five days prior to the scheduled opening.

Where there is a question that will not lead to an addendum, the questions will be made in writing to the Purchasing Department. The answer will be in writing posted on the website for everyone to receive the same response.

9. DELINQUENT TAXES:

All vendors seeking to do business with Webb County must owe no delinquent taxes to the County. Attestation of owing no delinquent taxes will be required. If a vendor owes taxes to Webb County, those taxes should be paid before submitting a proposal.

10. AWARD OF CONTRACT:

(A) The contract will be awarded to the best qualified according to the proposal criteria and a written award letter will be issue.
   (1) Award of a proposal requires formal approval by the Commissioners Court.
   (2) Proposal contract must also be approved by the Commissioners Court.
   (3) The written notice to proceed will be for construction contracts provided after all contract documents are signed.

(B) Prices must be quoted F.O.B. Webb County with all transportation charges prepaid, unless otherwise specified in the Invitation for Proposals.

(C) Delivery time will be considered in breaking of tie proposals.

(D) Period of Performance will commence with written Notice to Proceed.

11. BID BOND

A bid bond in the amount of 5% of the Proposal issued by an acceptable surety company shall be submitted with each proposal. A certified check or Bank Draft payable to the Webb County may be submitted in lieu of the Bid Bond. All such bonds, cashier checks shall be drawn payable to Webb County.

12. PERFORMANCE AND PAYMENT BOND

A Performance Bond is require for **construction work** if the contract is in excess of $100,000; and a Payment Bond is require if the **construction contract** is in excess of $25,000. The requirement is for all prime contractors which enter into a formal contract with the State, any department, board, agency, municipality, county, school district or any division or subdivision. The failure of the successful proposer to execute the agreement and supply the required bonds within ten (10) days **after** the award or within such extended period as Webb County may grant, shall constitute a default and Webb County may, at its option either award the contract to next lowest responsible proposer, or re-advertise for proposals. In either case, Webb County may charge against the proposer the difference between the amount of the proposal, and the amount for which a contract is subsequently executed irrespective of whether this difference exceeds the amount of the bid bond. If a more favorable proposal is received through re-advertisement, the defaulting proposer shall have no claim against Webb County for a refund.

13. WORKERS' COMPENSATION INSURANCE COVERAGE:

The Workers' Compensation Commission has adopted Rule 110.110 effective with all bids advertised after September 1, 1994. The TWCC has stated that it is aware that a statutory requirement for workers' compensation insurance coverage is not being met. Therefore, Rule110.110 requires that all proposers be covered under workers' compensation insurance to achieve compliance from both contractor(s) and governmental entities. **Attachment A** is provided in accordance with the requirements on governmental entities. Please read carefully and prepare your proposal in full compliance to TWCC Rule 110.110. Failure to provide the required certificates upon submission of a proposal could result in your proposal being declared non-responsive.

14. REFERENCES:

Webb County requires proposer to supply with this proposal, a list of at least three (3) references where like services have been supplied by their firm. Include name of firm, address, telephone number and name of representative.

15. STATEMENTS:

No oral statement of any person shall modify or otherwise change, or affect the terms conditions, plans and/or specifications stated in the proposal packages.

16. ETHICS:

The proposer shall not accept or offer gifts or anything of value nor enter into any business arrangement with any employee, of the Webb County Purchasing Department.

17. PROPRIETARY INFORMATION:

All materials submitted to the County become public property and are subject to the Texas Open Records Act upon receipt. If a proposer does not desire proprietary information in the proposal to be disclosed, each page must be identified and marked proprietary a time of submittal. The County will, to the extent allowed by law, endeavor to protect such information from disclosure. The final decision as to what information must be disclosed, however, lies with the Texas Attorney General. Failure to identify proprietary information will result in all unmarked sections being deemed non-proprietary and available upon public request.

Attachment A

NOTICE TO ALL PROPOSERS

The Texas Workers' Compensation Commission has adopted Rule 110.110 effective with all proposals advertised after September 1, 1994 and these changes affect your proposal on this project.

The TWCC has stated that it is aware that statutory requirements provided for workers' compensation insurance coverage is not being met. Rule 110.110 is designed to achieve compliance from both contractors and governmental entities… This affects both of us on this project.

Providing false or misleading certificates of coverage, failing to provide or maintain required coverage, or failing to report any change that materially affects the coverage may subject the contractor(s) or other persons providing services on this project to legal penalties. This affects your subcontractors.

Therefore, the attached is provided in accordance with the requirements on governmental entities. Please read carefully and prepare your bid in full compliance to TWCC Rule 110.110. Failure to provide the required certificates upon submission of a bid could result in your bid being declared non-responsive.

According to TWCC, "This rule does not create any duty or burden on anyone which the law does not establish." Therefore, the county should not experience any increase in cost because of the need to comply with the Texas Worker's Compensation laws.

_____

Leticia Gutierrez
Webb County Interim Purchasing Agent

§110.110. Reporting Requirements for Building or Construction Projects for Governmental Entities.

(a) The following words and terms, when used in this rule, shall have the following meanings, unless the context clearly indicates otherwise. Terms not defined in this rule shall have the meaning defined in the Texas Labor Code, if so defined.

(1) Certificate of coverage (certificate) –A copy of a certificate of insurance, a certificate of authority to self-insure issued by the commission, or workers' compensation coverage agreement (TWCC-81, TWCC-82, TWCC-83, or TWCC-84), showing statutory workers' compensation insurance coverage for the person's or entity's employees (including those subject to a coverage agreement) providing services on a project, for the duration of the project.

(2) Building or construction—Has the meaning defined in the Texas Labor Code, §406.09(e)(1).

(3) Contractor –A person bidding for or awarded a building or construction project by a governmental entity.

(4) Coverage—Workers' compensation insurance meeting the statutory requirements of the Texas Labor Code, §401.011(44).

(5) Coverage agreement—A written agreement on form TWCC-81, form TWCC-82, form TWCC-83, or form TWCC-84, filed with the Texas Workers' Compensation Commission which establishes a relationship between the parties for purposes of the Texas Workers' Compensation Act, pursuant to the Texas Labor Code, Chapter 406, Subchapter F and G, as one of employer/employee and establishes who will be responsible for providing workers' compensation coverage for persons providing services on the project.

(6) Duration of the project—Includes, the time from the beginning of work on the project until the work on the project has been completed and accepted by the governmental entity.

(7) Persons providing services on the project ("subcontractor" in §406.096 of the Act)—With the exception of persons excluded under subsection (h) and (i) of this section, includes all persons or entities performing all or part of the services the contractor has undertaken to perform on the project, regardless of whether that person contracted directly with the contractor

and regardless of whether that person has employees. This includes but is not limited to independent contractors, subcontractors, leasing companies, motor carriers, owner-operators, employees of any such entity, or employees of any entity furnishing persons to perform services on the project. "Services" includes but not limited to providing, hauling, or delivering equipment or materials, or providing labor, transportation, or other service related to a project. Services" does not include activities unrelated to the project, such as food/beverage vendors, office supply deliveries, and delivery of portable toilets.

(8) Project—Includes the provision of all services related to a building or construction contract for a governmental entity.

(b) Providing or causing to be provided a certificate of coverage pursuant to this rule is a representation by the insured that all employees of the insured who are providing services on the project are covered by workers' compensation coverage, that the coverage is based on proper reporting of classification codes and payroll amounts, and that all coverage agreements have filed with the appropriate insurance carrier or, in the case of a self-insured, with the commission's Division of Self-Insurance Regulation. Providing false or misleading certificates of coverage, or failing to provide or maintain required coverage, or failing to report any change that materially affects the provision of coverage may subject the contractor or other person providing services on the project to administrative penalties, criminal penalties, civil penalties, or other civil actions.

(c) A governmental entity that enters into a building or construction contract on a project shall:

(1) include in the bid specifications, all the provisions of paragraph (7) of this subsection, using the language required by paragraph (7) of this subsection;

(2) as part of the contract, using the language required by paragraph (7) of this subsection, require the contractor to perform as required in subsection (d) of this section;

(3) obtain from the contractor a certificate of coverage for each person providing services on the project, prior to that person beginning work on the project;

(4) obtain form the contractor a new certificate of coverage showing extension of coverage:

(A) before the end of the current coverage period, if the contractor's current certificate of coverage shows that the coverage period ends during the duration of the project; and

(B) no later than seven days after the expiration of the coverage for each other person providing services on the project whose current certificate shows that the coverage period ends during the duration of the project; and

(5) retain certificates of coverage on file for the duration of the project and for three years thereafter,

(6) provide a copy of the certificates of coverage to the commission upon request and to any person entitled to them by law; and

(7) use the language contained in the following Figure 1 for bid specifications and contracts, without any additional words or changes, except those required to accommodate the specific document in which they are contained or to impose stricter standards of documentation:

Article _____ Workers' Compensation Insurance coverage.

A. Definitions:

Certificate of coverage ("certificate ") – A copy of a certificate of insurance, a certificate of authority to self-insure issued by the commission, or a coverage agreement (TWCC-81, TWCC-82, TWCC-83, or TWCC-84), showing statutory workers' compensation insurance coverage for the person's or entity's employees providing services on a project, for the duration of the project.

Duration of the project – includes the time from the beginning of the work on the project until the contractor's/person's work on the project has been completed and accepted by the governmental entity.

Persons providing services on the project ("subcontractor" in §406.096) – includes all persons or entities performing all or part of the services the contractor has undertaken to perform on the project, regardless of whether that person contracted directly with the contractor and regardless of whether that person has employees. This includes, without limitation, independent contractors, subcontractors, leasing companies, motor carriers, owner-operators employees of any such entity, or employees of any entity which furnishes persons to provide services on the project. "Services" include, without limitation, providing,

hauling, or delivering equipment or materials, or providing labor, transportation, or other service related to a project. "Services" does not include activities unrelated to the project, such as food/beverage vendors, office supply deliveries, and delivery of portable toilets.

B. The contractor shall provide coverage, based on proper reporting of classification codes and payroll amounts and filing of any coverage agreements, which meets the statutory requirements of Texas Labor Code, Section 401.011 (44) for all employees of the contractor providing services on the project, for the duration of the project.

C. The Contractor must provide a certificate of coverage to the governmental entity prior to being awarded the contract

D. If the coverage period shown on the contractor's current certificate of coverage ends during the duration of the project, the contractor must, prior to the end of the coverage period, file a new certificate of coverage with the governmental entity showing that coverage has been extended.

E. The contractor shall obtain from each person providing services on a project, and provide to the governmental entity:

(1) a certificate of coverage, prior to that person beginning work on the project, so the governmental entity will have on file certificates of coverage showing coverage for all persons providing services on the project; and

(2) no later than seven days after receipt by the contractor, a new certificate of coverage showing extension of coverage, if the coverage period shown on the current certificate of coverage ends during the duration of the project.

F. The contractor shall retain all required certificates of coverage for the duration of the project and for one year thereafter.

G. The contractor shall notify the governmental entity in writing by certified mail or personal delivery, within 10 days after the contractor knew or should have known of any change that materially affects the provision of coverage of any person providing services on the project.

H. The contractor shall post on each project site a notice, in the text, form and manner prescribed by the Texas Workers' Compensation Commission, informing all persons providing services on the project that they are required to be covered, and stating how a person may verify coverage and report lack of coverage.

I. the contractor shall contractually require each person with whom it contracts to provide services on a project, to:

(1) provide coverage, based on proper reporting of classification codes and payroll amounts and filing of any coverage agreements, which meets the statutory requirements of Texas Labor Code, Section 401.011(44) for all of its employees providing services on the project, for the duration of the project;

(2) provide to the contractor, prior to that person beginning work on the project, a certificate of coverage showing that coverage is being provided for all employees of the person providing services on the project, for the duration of the project;

(3) provide the contractor, prior to the end of the coverage period, a new certificate of coverage showing extension of coverage, if the coverage period shown on the current certificate of coverage ends during the duration of the project;

(4) obtain from each other person with whom it contracts, and provide the contractor;

(A) a certificate of coverage, prior to the other person beginning work on the project; and

(B) a new certificate of coverage showing extension of coverage, prior to the end of the coverage period, if the coverage period shown on the current certificate of coverage ends during the duration of the project;

(5) retain all required certificates of coverage on file for the duration of the project and for one year thereafter;

(6) notify the governmental entity in writing by certified mail or personal delivery, within 10 days after the person knew or should have known, of any change that materially affects the provision of coverage of any person providing services on the project; and

(7) contractually require each person with whom it contracts, to perform as required by paragraphs (1)-(7), with the certificates of coverage to be provided to the person for whom they are providing services.

J. By signing this contract or providing or causing to be provided a certificate of coverage, the contactor is representing to the governmental entity that all employees of the contractor who will provide services on the project will be covered by workers' compensation coverage for the duration of the project, that the coverage will be based on proper reporting of classification codes and payroll amounts, and that all coverage agreements will be filed with the appropriate insurance carrier or, in the case of a self-insured, with the commission's Division of Self-Insurance Regulation. Providing false or misleading information may subject the contractor to administrative penalties, criminal penalties, civil penalties, or other civil actions.

K. The contractor's failure to comply with any of these provisions is a breach of contract by the contractor which entitles the governmental entity to declare the contract void if the contractor does not remedy the breach within ten days after receipt of notice of breach from the governmental entity.

(d) A contractor shall:

(1) provide coverage for its employees providing services on a project, for the duration of the project based on proper reporting of classification codes and payroll amounts and filing of any coverage agreements;

(2) provide a certificate of coverage showing workers' compensation coverage to the governmental entity prior to beginning work on the project;

(3) provide the governmental entity, prior to the end of the coverage period, a new certificate of coverage showing extension of coverage, if the coverage period shown on the contractor's current certificate of coverage ends during the duration of the project;

(4) obtain from each person providing services on a project, and provide to the governmental entity:

(A) a certificate of coverage, prior to that person beginning work on the project, so the governmental entity will have on file certificates of coverage showing coverage for all persons providing services on the project; and

(B) no later than seven days after receipt by the contractor, a new certificate of coverage showing extension of coverage, if the coverage period shown on the current certificate of coverage ends during the duration of the project;

(5) retain all required certificates of coverage on file for the duration of the project and for one year thereafter;

(6) notify the governmental entity in writing by certified mail or personal delivery, within ten days after the contractor knew or should have known, of any change that materially affects the provision of coverage of any person providing services on the project;

(7) post a notice on each project site informing all persons providing services on the project that they are required to be covered, and stating how a person may verify current coverage and report failure to provide coverage. This notice does not satisfy other posting requirements imposed by the Act or other commission rules. This notice must be printed with a title in at least 30 point bold type and text in at least 19 point normal type, and shall be in both English and Spanish and any other language common to the worker population. The text for the notices shall be the following text provided by the commission on the sample notice, without any additional words or changes.

"REQUIRED WORKERS' COMPENSATION COVERAGE"

"The law requires that each person working on this site or providing services related to this construction project must be covered by workers' compensation insurance. This includes persons providing, hauling, or delivering equipment or materials, or providing labor or transportation or other service related to the project, regardless of the identity of their employer or status as an employee."

"Call the Texas Workers' Compensation Commission at 512-440-3789 to receive information on the legal requirement for coverage, to verify whether your employer has provided the required coverage, or to report an employer's failure to provide coverage."

(8) contractually require each person with whom it contracts to provide services on a project to:

(A) provide coverage based on proper reporting of classification codes and payroll amounts and filing of any coverage agreements for all of its employees providing services on the project, for the duration of the project;

(B) provide a certificate of coverage to the contractor prior to that person beginning work on the project;

(C) include in all contracts to provide services on the project the language in subsection (e)(3) of this section;

(D) provide the contractor, prior to the end of the coverage period, a new certificate of coverage showing extension of coverage, if the coverage period shown on the current certificate of coverage ends during the duration of the project;

(E) obtain from each other person with whom it contracts, and provide to the contractor:

(i) a certificate of coverage, prior to the other person beginning work on the project; and

(ii) prior to the end of the coverage period, a new certificate of coverage showing extension of the coverage period, if the coverage period if the coverage period shown on the current certificate of coverage ends during the duration of the project;

(F) retain all required certificates of coverage on file for the duration of the project and for one year thereafter;

(G) notify the governmental entity in writing by certified mail or personal delivery, within ten days after the person knew or should have known, of any change that materially affects the provision of coverage of any person providing services on the project; and

(H) contractually require each other person with whom it contracts, to perform as required by subparagraph (A)-(H) of this paragraph, with the certificate of coverage to be provided to the person for whom they are providing services.

(e) A person providing services on a project, other than a contractor, shall:

(1) provide coverage for its employees providing services on a project, for the duration of the project based on proper reporting of classification codes and payroll amounts and filing of any coverage agreements;

(2) provide a certificate of coverage as required by its contract to provide services on the project, prior to beginning work on the project;

(3) have the following language in its contract to provide services on the project: "By signing this contract or providing or causing to be provided a certificate of coverage, the person signing this contract is representing to the governmental entity that all employees of the person signing this contract who will provide services on the project will be covered by workers' compensation coverage for the duration of the project, that the coverage will be based on proper reporting of classification codes and payroll amounts, and that all coverage agreements will be filed with the appropriate insurance carrier or, in the case of a self-insured, with the commission's Division of Self-Insurance Regulation. Providing false or misleading information may subject the contractor to administrative penalties, criminal penalties, civil penalties, or other actions."

(4) provide the person for whom it is providing services on the project, prior to the end of the coverage period shown on its current certificate of coverage, a new certificate showing extensions of coverage, if the coverage period shown on the certificate of coverage ends during the duration of the project:

(5) obtain from each person providing services on a project under contract to it, and provide as required by its contract:

(A) a certificate of coverage, prior to the other person beginning work on the project; and

(B) prior to the end of the coverage period, a new certificate of coverage showing extensions of the coverage period, if the coverage period shown on the current certificate of coverage ends during the duration of the project;

(6) retain all required certificates of coverage on file for the duration of the project and for one year thereafter;

(7) notify the governmental entity in writing by certified mail or personal delivery, of any change that materially affects the provision of coverage of any person providing services on the project and send the notice within ten days after the person knew or should have known of the change; and

(8) contractually require each other person with whom it contracts to:

(A) provide coverage based on proper reporting of classification codes and payroll amounts and filing of any coverage agreements for all of its employees providing services on the project, for the duration of the project;

(B) provide a certificate of coverage to it prior to that other person beginning work on the project:

(C) include in all contracts to provide services on the project the language in paragraph (3) of this subsection;

(D) provide, prior to the end of the coverage period, a new certificate of coverage showing extension of the coverage period, if the coverage period shown on the current certificate of coverage ends during the duration of the project;

(E) obtain from each other person under contract to it to provide services on the project, and provide as required by its contract;

(i) a certificate of coverage, prior to the other person beginning work on the project; and

(ii) prior to the end of the coverage period, a new certificate of coverage showing extension of the coverage period, if the coverage period shown on the current certificate of coverage ends during the duration of the contract;

(F) retain all required certificates on file for the duration of the project and for one year thereafter;

(G) notify the governmental entity in writing by certified mail or personal delivery, within ten days after the person knew or should have known, of any change that materially affects the provision of coverage of any person providing services on the project; and

(H) contractually require each person with whom it contracts, to perform as required by this subparagraph and subparagraphs (A)-(G) of this paragraph, with the certificates of coverage to be provided to the person for whom they are providing services.

(f) If any provision of this rule or its application to any person or circumstance is held invalid, the invalidity does not affect other provisions or applications of this rule that can be given effect without the invalid provision or application, and to this end the provision of this rule declared to be severable.

(g) This rule is applicable for building or construction contracts advertised for bid by a governmental entity on or after September 1, 1994. This rule is also applicable for those building or construction contracts entered into on or after September 1, 1994, which are not required by law to be advertised for bid.

(h) The coverage requirement in this rule does not apply to motor carriers who are required pursuant to Texas Civil Statutes, Article 667c, to register with the Texas Department of Transportation and who provide accidental insurance overage pursuant to Texas Civil Statutes 667c, §4(j).

(i) The coverage requirement in this rule does not apply to sole proprietors, partners, and corporate officers who meet the requirements of the Act, §406.097(c), and who are explicitly excluded from coverage in accordance with the Act, §406.097(a) (as added by House Bill 1089, 74th Legislature, 1995, §1.20). This subsection applies only to sole proprietors, partners, and corporate executive officers who are excluded from coverage in an insurance policy or certificate of authority to self-insure that is delivered, issued for delivery, or renewed on or after January 1, 1996.

The provisions of this §110.110 adopted to be effective September 1, 1994, 19 TexReg 5715; amended to be effective November 6, 1995, 20 TexReg 8609.

THIS PAGE INTENTIONALLY LEFT BLANK

Webb County

Conflict of Interest Disclosure

Effective January 1, 2006, Chapter 176 if the Texas Local Government Code requires that any vendor or person considering doing business with a local government entity disclose in the Questionnaire Form CIQ, the vendor or person's affiliation or business relationship that might cause a conflict of interest with a local government entity. By law, this questionnaire must be filled with the records administrator of Webb County no later than the 7th business day after the date the person becomes aware of facts that require the statement to be filed. See Section 176.006, Local Government Code. A person commits an offense if the person violates Section 176.006, Local Government Code. An offense under this section is a Class C misdemeanor. The questionnaire may be viewed and printed by following the link before:

By submitting a response to this request, the vendor represents that it is in compliance with the requirements of Chapter 176 of the Texas Local Government Code.

The Webb County Officials who come within Chapter 176 of the Local Government Code relating to filing of Conflict of Interest Questionnaire (Form CIQ) include:

1. Webb County Judge Tano Tijerina
2. Commissioner Frank Sciaraffa
3. Commissioner Rosaura "Wawi" Tijerina
4. Commissioner John Galo
5. Commissioner Jaime Canales
6. Judge Joe Lopez, Chairman, 49th Judicial District
7. Judge Becky Palomo, 341st Judicial District
8. Judge Oscar Hale 406 Judicial District

Please send completed forms to the Webb County Clerk's Office located at 1110 Victoria, Suite 201, Laredo, Texas 78040.

CONFLICT OF INTEREST QUESTIONNAIRE

FORM CIQ

For vendor or other person doing business with local governmental entity

This questionnaire reflects changes made to the law by H.B. 1491, 80th Leg., Regular Session.

This questionnaire is being filed in accordance with Chapter 176, Local Government Code by a person who has a business relationship as defined by Section 176.001(1-a) with a local governmental entity and the person meets requirements under Section 176.006(a).

By law this questionnaire must be filed with the records administrator of the local governmental entity not later than the 7th business day after the date the person becomes aware of facts that require the statement to be filed. *See* Section 176.006, Local Government Code.

A person commits an offense if the person knowingly violates Section 176.006, Local Government Code. An offense under this section is a Class C misdemeanor.

OFFICE USE ONLY

Date Received

1 **Name of person who has a business relationship with local governmental entity.**

2 ☐ **Check this box if you are filing an update to a previously filed questionnaire.**

(The law requires that you file an updated completed questionnaire with the appropriate filing authority not later than the 7th business day after the date the originally filed questionnaire becomes incomplete or inaccurate.)

3 **Name of local government officer with whom filer has employment or business relationship.**

_____

Name of Officer

This section (item 3 including subparts A, B, C & D) must be completed for each officer with whom the filer has an employment or other business relationship as defined by Section 176.001(1-a), Local Government Code. Attach additional pages to this Form CIQ as necessary.

A. Is the local government officer named in this section receiving or likely to receive taxable income, other than investment income, from the filer of the questionnaire?

☐ Yes ☐ No

B. Is the filer of the questionnaire receiving or likely to receive taxable income, other than investment income, from or at the direction of the local government officer named in this section AND the taxable income is not received from the local governmental entity?

☐ Yes ☐ No

C. Is the filer of this questionnaire employed by a corporation or other business entity with respect to which the local government officer serves as an officer or director, or holds an ownership of 10 percent or more?

☐ Yes ☐ No

D. Describe each employment or business relationship with the local government officer named in this section.

4

_____ _____

Signature of person doing business with the governmental entity Date

Adopted 06/29/2007

CERTIFICATION
REGARDING DEBARMENT, SUSPENSION, INELIGIBILITY AND VOLUNTARY EXCLUSION FOR COVERED CONTRACTS

PART A.

Federal Executive Orders 12549 and 12689 require the Texas Department of Agriculture (TDA) to screen each covered potential contractor to determine whether each has a right to obtain a contract in accordance with federal regulations on debarment, suspension, ineligibility, and voluntary exclusion. Each covered contractor must also screen each of its covered subcontractors.

In this certification "contractor" refers to both contractor and subcontractor; "contract" refers to both contract and subcontract.

By signing and submitting this certification the potential contractor accepts the following terms:

1. The certification herein below is a material representation of fact upon which reliance was placed when this contract was entered into. If it is later determined that the potential contractor knowingly rendered an erroneous certification, in addition to other remedies available to the federal government, the Department of Health and Human Services, United States Department of Agriculture or other federal department or agency, or the TDA may pursue available remedies, including suspension and/or debarment.
2. The potential contractor will provide immediate written notice to the person to which this certification is submitted if at any time the potential contractor learns that the certification was erroneous when submitted or has become erroneous by reason of changed circumstances.
3. The words "covered contract", "debarred", "suspended", "ineligible", "participant", "person", "principal", "proposal", and "voluntarily excluded", as used in this certification have meanings based upon materials in the Definitions and Coverage sections of federal rules implementing Executive Order 12549. Usage is as defined in the attachment.
4. The potential contractor agrees by submitting this certification that, should the proposed covered contract be entered into, it will not knowingly enter into any subcontract with a person who is debarred, suspended, declared ineligible, or voluntarily excluded from participation in this covered transaction, unless authorized by the Department of Health and Human Services, United States Department of Agriculture or other federal department or agency, and/or the TDA, as applicable.

Do you have or do you anticipate having subcontractors under this proposed contract?

☐ Yes

☐ No

5. The potential contractor further agrees by submitting this certification that it will include this certification titled "Certification Regarding Debarment, Suspension, Ineligibility, and Voluntary Exclusion for Covered Contracts" without modification, in all covered subcontracts and in solicitations for all covered subcontracts.
6. A contractor may rely upon a certification of a potential subcontractor that it is not debarred, suspended, ineligible, or voluntarily excluded from the covered contract, unless it knows that the certification is erroneous. A contractor must, at a minimum, obtain certifications from its covered subcontractors upon each subcontract's initiation and upon each renewal.
7. Nothing contained in all the foregoing will be construed to require establishment of a system of records in order to render in good faith the certification required by this certification document. The knowledge and information of a contractor is not required to exceed that which is normally possessed by a prudent person in the ordinary course of business dealings.
8. Except for contracts authorized under paragraph 4 of these terms, if a contractor in a covered contract knowingly enters into a covered subcontract with a person who is suspended, debarred, ineligible, or voluntarily excluded from participation in this transaction, in addition to other remedies available to the federal government, Department of Health and Human Services, United States Department of Agriculture, or other federal department or agency, as applicable, and/or the TDA may pursue available remedies, including suspension and/or debarment.

PART B. CERTIFICATION REGARDING DEBARMENT, SUSPENSION, INELIGIBILITY AND VOLUNTARY EXCLUSION FOR COVERED CONTRACTS

Indicate in the appropriate box which statement applies to the covered potential contractor:

☐ The potential contractor certifies, by submission of this certification, that neither it nor its principals is presently debarred, suspended, proposed for debarment, declared ineligible, or voluntarily excluded form participation in this contract by any federal department or agency or by the State of Texas.

☐ The potential contractor is unable to certify to one or more of the terms in this certification. In this instance, the potential contractor must attach an explanation for each of the above terms to which he is unable to make certification. Attach the explanation(s) to this certification.

Name of Contractor	**Vendor ID No. or Social Security No.**	**Program No.**

_____ _____
Signature of Authorized Representative Date

_____
Printed/Typed Name and Title of Authorized Representative

CERTIFICATION REGARDING FEDERAL LOBBYING
(Certification for Contracts, Grants, Loans, and Cooperative Agreements)

PART A. PREAMBLE

Federal legislation, Section 319 of Public Law 101-121 generally prohibits entities from using federally appropriated funds to lobby the executive or legislative branches of the federal government. Section 319 specifically requires disclosure of certain lobbying activities. A federal government-wide rule, "New Restrictions on Lobbying", published in the Federal Register, February 26, 1990, requires certification and disclosure in specific instances.

PART B. CERTIFICATION

This certification applies only to the instant federal action for which the certification is being obtained and is a material representation of fact upon which reliance was placed when this transaction was made or entered into. Submission of this certification is a prerequisite for making or entering into this transaction imposed by section 1352, title 31, U.S. Code. Any person who fails to file the required certification shall be subject to a civil penalty of not less than $100,000 for each such failure.

The undersigned certifies, to the best of his or her knowledge and belief, that:

1. No federally appropriated funds have peen paid or will be paid, by or on behalf of the undersigned, to any person for influencing or attempting to influence an officer or employee of any agency, a member of Congress, an officer or employee of Congress, or an employee of a member of Congress in connection with the awarding of any federal contract, the making of any federal grant, the making of any federal loan, the entering into of any cooperative agreement, or the extension, continuation, renewal, amendment, or modification of any federal contract, grant, loan, or cooperative agreement.

2. If any funds other than federally appropriated funds have been paid or will be paid to any person for influencing or attempting to influence an officer or employee of any agency, a member of Congress, an officer or employee of Congress, or an employee of a member of Congress in connection with these federally funded contract, subcontract, subgrant, or cooperative agreement, the undersigned shall complete and submit Standard Form-LLL, "Disclosure Form to Report Lobbying", in accordance with its instructions. (If needed, contact the Texas Department of Agriculture to obtain a copy of Standard Form-LLL.)

3. The undersigned shall require that the language of this certification be included in the award documents for all covered subawards at all tiers (including subcontracts, subgrants, and contracts under grants, loans, and cooperative agreements) and that all covered subrecipients will certify and disclose accordingly.

Do you have or do you anticipate having covered subawards under this transaction?
☐ Yes
☐ No

Name of Contractor/Potential Contractor	**Vendor ID No. or Social Security No.**	**Program No.**

Name of Authorized Representative	**Title**

_____ _____
Signature – Authorized Representative Date

PROOF OF NO DELINQUENT TAXES OWED TO WEBB COUNTY

Name _____ owes no delinquent property taxes to Webb County.

_____ owes no property taxes as a business in Webb County.
(Business Name)

_____ owes no property taxes as a resident of Webb County.
(Business Owner)

_____
Person who can attest to the above information

*** SIGNED NOTORIZED DOCUMENT AND PROOF OF NO DELINQUENT TAXES TO WEBB COUNTY.**

The State of Texas
County of Webb
Before me, a Notary Public, on this day personally appeared _____, know to me (or proved to me on the oath of _____ to be the person whose name is subscribed to the forgoing instrument and acknowledged to me that he executed the same for the purpose and consideration therein expressed.

Given under my hand and seal of office this ____day of _____ 2016.

Notary Public, State of Texas

_____

(Print name of Notary Public here)

My commission expires the _____day of _____20__.

Proposer Information

Name of Proposer: _____

Address: _____

City and State _____

Phone: _____

Email Address: _____

Signature of Person Authorized to Sign:

_____
Signature

_____
Print Name

_____
Title

Indicate status as to “Partnership”, “Corporation”, “Land Owner”, etc.

_____

_____
(Date)

Note:
All submissions relative to these RFP shall become the property of Webb County and are nonreturnable.

If any further information is required please call the Webb County Interim Purchasing Agent, Leticia Gutierrez, at (956)523-4127 or Contract Administrator, Amanda Del Toro, at (956)-523-5936.

References

Name of Firm	Address	Phone	Name of Contact

SCHEDULE OF VALUES

ITEM NO.	ESTIMATED QUANTITY	ITEM DESCRIPTION	UNIT PRICE	TOTAL AMOUNT
BASE PRICE ITEMS				
1.	273 STA	Right-Of-Way Prep, Mobilization, Clear Work Area and Make Ready For Construction, per TxDOT Item 100-6002, complete and prepared for	$_____	$_____
2.	2 EA	Remove and Dispose of Existing Bridge Structures at App. Sta:20+50 and Sta 23+65 , complete and disposed of for	$_____	$_____
3.	75 LF	Remove and Dispose of Existing 18" CMP at App. Sta:36+00, complete and disposed of for	$_____	$_____
4.	41 LF	Remove and Dispose of Existing 30" CMP at App. Sta:229+50, complete and disposed of for	$_____	$_____
5.	40 LF	Remove and Dispose of Existing 24" CMP at App. Sta:269+00, complete and disposed of for	$_____	$_____
6.	7,200 CY	Excavation for Roadway, per TxDOT Item 110-6001, complete and prepared for	$_____	$_____
7.	75,000 CY	Embankment for Roadway, (Final)(Dens Cont)(TY C), per TxDOT Item 132-6006, Compacted, complete and in place for	$_____	$_____

ITEM NO.	ESTIMATED QUANTITY	ITEM DESCRIPTION	UNIT PRICE	TOTAL AMOUNT
8.	40 AC	Broadcast Seeding, (Perm)(Rural)(Sandy), per TxDOT Item 164-6034, complete and in place for	$_____	$_____
9.	820 MG	Sprinkling for Dust Control, per TxDOT Item 204-6003, complete and in place for	$_____	$_____
10.	1,950 SY	9" Reinforced and Jointed Concrete Pavement at Espejo Gates and HWY 83 intersection, per TxDOT Item 360-6019, complete and in place for	$_____	$_____
11.	280 CY	Concrete Approach Slab For Bridges, per TxDot Item 422-6015, complete and in place for	$_____	$_____
12.	90 CY	4" Reinforced Concrete Rip-Rap, per TxDOT ITEM 432-6001 complete and in place for	$_____	$_____
13.	332 LF	8 – 10' x 6'Multiple Box Culverts at App. Sta: 20+50, Pre-Cast, per TxDOT Item 462-6032, include Excavation/Embankment, Shoring and Bedding, complete and in place for	$_____	$_____
14.	2 EA	Wingwalls for Multiple Box Culverts at App. Sta: 20+50, (PW-1) per TxDOT Item 466-6181, include Excavation/Embankment, Shoring, Connection to Culvert and Bedding, complete and in place for	$_____	$_____

ITEM NO.	ESTIMATED QUANTITY	ITEM DESCRIPTION	UNIT PRICE	TOTAL AMOUNT
15.	332 LF	8 – 10' x 6'Multiple Box Culverts at App. Sta: 23+65, Pre-Cast, per TxDOT Item 462-6032, include Excavation/Embankment, Shoring and Bedding, complete and in place for	$_____	$_____
16.	2 EA	Wingwalls for Multiple Box Culverts at App. Sta: 23+65, (PW-1) per TxDOT Item 466-6181, include Excavation/Embankment, Shoring, Connection to Culvert and Bedding, complete and in place for	$_____	$_____
17.	38 LF	1 – 3' x 3' Single Box Culvert at App. Sta: 26+75, Pre-Cast, per TxDOT Item 462-6002, include Excavation/Embankment, Shoring and Bedding, complete and in place for	$_____	$_____
18.	2 EA	Wingwalls for Single Box Culvert at App. Sta: 26+75, (PW-1) per TxDOT Item 466-6178, include Excavation/Embankment, Shoring, Connection to Culvert and Bedding, complete and in place for	$_____	$_____
19.	76 LF	2 – 3' x 3'Multiple Box Culverts at App. Sta: 29+00, Pre-Cast, per TxDOT Item 462-6002, include Excavation/Embankment, Shoring and Bedding, complete and in place for	$_____	$_____
20.	2 EA	Wingwalls for Multiple Box Culverts at App. Sta: 29+00, (PW-1) per TxDOT Item 466-6178, include Excavation/Embankment, Shoring, Connection to Culvert and Bedding, complete and in place for	$_____	$_____

ITEM NO.	ESTIMATED QUANTITY	ITEM DESCRIPTION	UNIT PRICE	TOTAL AMOUNT
21.	38 LF	1 – 3' x 3' Single Box Culvert at App. Sta: 30+66, Pre-Cast, per TxDOT Item 462-6002, include Excavation/Embankment, Shoring and Bedding, complete and in place for	$_____	$_____
22.	2 EA	Wingwalls for Single Box Culvert at App. Sta: 30+66, (PW-1) per TxDOT Item 466-6178, include Excavation/Embankment, Shoring, Connection to Culvert and Bedding, complete and in place for	$_____	$_____
23.	190 LF	5 – 3' x 3'Multiple Box Culverts at App. Sta: 33+70, Pre-Cast, per TxDOT Item 462-6002, include Excavation/Embankment, Shoring and Bedding, complete and in place for	$_____	$_____
24.	2 EA	Wingwalls for Multiple Box Culverts at App. Sta: 33+70, (PW-1) per TxDOT Item 466-6178, include Excavation/Embankment, Shoring, Connection to Culvert and Bedding, complete and in place for	$_____	$_____
25.	190 LF	5 – 3' x 3'Multiple Box Culverts at App. Sta: 40+70, Pre-Cast, per TxDOT Item 462-6002, include Excavation/Embankment, Shoring and Bedding, complete and in place for	$_____	$_____
26.	2 EA	Wingwalls for Multiple Box Culverts at App. Sta: 40+70, (PW-1) per TxDOT Item 466-6178, include Excavation/Embankment, Shoring, Connection to Culvert and Bedding, complete and in place for	$_____	$_____

ITEM NO.	ESTIMATED QUANTITY	ITEM DESCRIPTION	UNIT PRICE	TOTAL AMOUNT
27.	190 LF	5 – 3' x 3'Multiple Box Culverts at App. Sta: 45+15, Pre-Cast, per TxDOT Item 462-6002, include Excavation/Embankment, Shoring and Bedding, complete and in place for	$_____	$_____
28.	2 EA	Wingwalls for Multiple Box Culverts at App. Sta: 45+15, (PW-1) per TxDOT Item 466-6178, include Excavation/Embankment, Shoring, Connection to Culvert and Bedding, complete and in place for	$_____	$_____
29.	228 LF	6 – 6' x 3'Multiple Box Culverts at App. Sta: 67+25, Pre-Cast, per TxDOT Item 462-6010, include Excavation/Embankment, Shoring and Bedding, complete and in place for	$_____	$_____
30.	2 EA	Wingwalls for Multiple Box Culverts at App. Sta: 67+25, (PW-1) per TxDOT Item 466-6178, include Excavation/Embankment, Shoring, Connection to Culvert and Bedding, complete and in place for	$_____	$_____
31.	304 LF	8 – 6' x 3'Multiple Box Culverts at App. Sta: 73+80, Pre-Cast, per TxDOT Item 462-6010, include Excavation/Embankment, Shoring and Bedding, complete and in place for	$_____	$_____
32.	2 EA	Wingwalls for Multiple Box Culverts at App. Sta: 73+80, (PW-1) per TxDOT Item 466-6178, include Excavation/Embankment, Shoring, Connection to Culvert and Bedding, complete and in place for	$_____	$_____

ITEM NO.	ESTIMATED QUANTITY	ITEM DESCRIPTION	UNIT PRICE	TOTAL AMOUNT
33.	114 LF	3 – 5' x 3'Multiple Box Culverts at App. Sta: 116+75, Pre-Cast, per TxDOT Item 462-6007, include Excavation/Embankment, Shoring and Bedding, complete and in place for	$_____	$_____
34.	2 EA	Wingwalls for Multiple Box Culverts at App. Sta: 116+75, (PW-1) per TxDOT Item 466-6178, include Excavation/Embankment, Shoring, Connection to Culvert and Bedding, complete and in place for	$_____	$_____
35.	115 LF	4 – 4' x 3'Multiple Box Culverts at App. Sta: 160+50, Pre-Cast, per TxDOT Item 462-6004, include Excavation/Embankment, Shoring and Bedding, complete and in place for	$_____	$_____
36.	2 EA	Wingwalls for Multiple Box Culverts at App. Sta: 160+50, (PW-1) per TxDOT Item 466-6178, include Excavation/Embankment, Shoring, Connection to Culvert and Bedding, complete and in place for	$_____	$_____
37.	380 LF	10 – 6' x 3'Multiple Box Culverts at App. Sta: 229+50, Pre-Cast, per TxDOT Item 462-6010, include Excavation/Embankment, Shoring and Bedding, complete and in place for	$_____	$_____
38.	2 EA	Wingwalls for Multiple Box Culverts at App. Sta: 229+50, (PW-1) per TxDOT Item 466-6178, include Excavation/Embankment, Shoring, Connection to Culvert and Bedding, complete and in place for	$_____	$_____

ITEM NO.	ESTIMATED QUANTITY	ITEM DESCRIPTION	UNIT PRICE	TOTAL AMOUNT
39.	168 LF	4 – 36" Skew Pipe Culverts at App. Sta: 269+00, RCP Pipe (CL V), per TxDOT Item 462-6027, include Excavation/Embankment, Shoring and Bedding, complete and in place for	$_____	$_____
40.	2 EA	Headwalls for Skew Pipe Culverts at App. Sta: 269+90, (CH-PW-S) per TxDOT Item 466-6134, include Excavation/Embankment, Shoring, Connection to Culvert and Bedding, complete and in place for	$_____	$_____
41.	168 LF	4 – 36" Pipe Culverts at App. Sta: 275+00, RCP Pipe (CL V), per TxDOT Item 462-6027, include Excavation/Embankment, Shoring and Bedding, complete and in place for	$_____	$_____
42.	2 EA	Headwalls for Pipe Culverts at App. Sta: 275+00, (CH-PW-0) per TxDOT Item 466-6101, include Excavation/Embankment, Shoring, Connection to Culvert and Bedding, complete and in place for	$_____	$_____
43.	1 LS	Mobilization, Establish and Remove Offices, Plants, Facilities, per TxDOT Item 500-6001, complete and in place for	$_____	$_____
44.	9 MO	Traffic Control Measures as shown on Plans, Provide Barricades, Signs, And Traffic control, per TxDOT Item 502-6001, complete and in place for	$_____	$_____

ITEM NO.	ESTIMATED QUANTITY	ITEM DESCRIPTION	UNIT PRICE	TOTAL AMOUNT
45.	273 STA	Construction Detours per TxDOT Item 508-6001, complete and in place for	$_____	$_____
46.	1,680 SY	9" Reinforced Concrete Driveway Construction at App. Sta: 36+15 and Sta: 221+85, per TxDOT Item 530-6010, complete and in place for	$_____	$_____
47.	650 LF	Metal Beam Guard Rails (Long-Span), (420 LF Wood Post/ 225 LF Steel Post) Item 540-6017, complete and in place for	$_____	$_____
48.	2,500 LF	T 631 Guard Rails for Bridge Class Structures Item 450-6018, (1,700 LF Woof post/ 700 LF Steel Post, complete and in place for	$_____	$_____
49.	600 LF	Install or Replace Barbed Wire Fence with Metal Posts, pre TxDOT Item 552-6003, as shown on plan, complete and in place for	$_____	$_____
50.	38 EA	Furnish, fabricate and install small roadside sign assemblies, per TxDOT Item 644-6027, complete and in place for	$_____	$_____

ITEM NO.	ESTIMATED QUANTITY	ITEM DESCRIPTION	UNIT PRICE	TOTAL AMOUNT
51.	55,000 LF	Furnish and place Shoulder Lane pavement markings as shown on plans, per TxDOT Item 666-6012, complete and in place for	$_____	$_____
52.	55,000 LF	Furnish and place Double Center Line pavement markings as shown on plans, per TxDOT Item 666-6126, complete and in place for	$_____	$_____
53.	735 EA	Retroflective Pavement Markers, per TxDOT item 672-6006, complete and in place for	$_____	$_____
54.	800 LF	Furnish, place and remove Rock Filter Dams as directed by Engineer, per TxDOT Items 506-6002, 506-6011, complete for	$_____	$_____
55.	3,700 CY	6" Caliache Turn Around as shown on Plans, per TxDOT Item 247-61041, complete and in place for	$_____	$_____
56.	3,400 LF	Temp. Sediment Control Fence, Install and Remove Items 506-6038 and Item 506-6039, Complete and in place for	$_____	$_____

TOTAL BASE PRICE ITEMS SUBTOTAL **$**_____

WRITTEN IN WORDS _____

ITEM NO.	ESTIMATED QUANTITY	ITEM DESCRIPTION	UNIT PRICE	TOTAL AMOUNT
ROADWAY SECTION				
57.	28,000 GAL	Prepare and Treat surface with Asphalt Binder, per TxDOT Item 310-6009, as per Geotech report, complete and in place for	$_____	$_____
58.	11,500 TON	2" Hot-Mix Asphalt, Type C, per TxDOT Item 340-6034, as per Geotech report, complete and in place for	$_____	$_____
59.	27,800 CY	12" Caliche Flexible Base, per TxDOT Item 247-6041, compacted, as per Geotech report, complete and in place for	$_____	$_____
60.	84,500 SY	Mix and Compact Lime, Water, with 7" of Base, per TxDOT Item 260-6015, compacted, as per Geotech report, complete and in place for	$_____	$_____
61.	1,150 TON	Lime (HYD, COM, OR QK (SLURRY)), per TxDOT Item 260-6016, compacted,as per Geotech report, complete and in place for	$_____	$_____
62.	84,500 SY	Geogrid Reinforcement Type IV, with 1' Overlap, as per Geotech report, complete and in place for	$_____	$_____

TOTAL ROADWAY SECTION SUBTOTAL **$**_____

WRITTEN IN WORDS _____

ITEM NO.	ESTIMATED QUANTITY	ITEM DESCRIPTION	UNIT PRICE	TOTAL AMOUNT
ROADWAY SECTION – ALTERNATE - 1				
57.1	28,000 GAL	Prepare and Treat surface with Asphalt Binder, per TxDOT Item 310-6009, complete and in place for	$_____	$_____
58.1	11,500 TON	2" Hot-Mix Asphalt, Type C, per TxDOT Item 340-6034, as per Geotech report, complete and in place for	$_____	$_____
59.1	34,500 CY	14.5" Caliche Flexible Base, per TxDOT Item 247-6041, compacted, as per Geotech report, complete and in place or	$_____	$_____
60.1	84,500 SY	Mix and Compact Lime, Water, with 10" of Base, per TxDOT Item 260-6054, compacted, as per Geotech report, complete and in place for	$_____	$_____
61.1	1,575 TON	Lime (HYD, COM, OR QK (SLURRY)), per TxDOT Item 260-6016, compacted, as per Geotech report, complete and in place for	$_____	$_____

TOTAL ROADWAY SECTION – ALTERNATE - 1 **$**_____

WRITTEN IN WORDS _____

_____

ITEM NO.	ESTIMATED QUANTITY	ITEM DESCRIPTION	UNIT PRICE	TOTAL AMOUNT
ROADWAY SECTION - ALTERNATE - 2				
57.2	28,000 GAL	Prepare and Treat surface with Asphalt Binder, per TxDOT Item 310-6009, complete and in place for	$_____	$_____
58.2	14,500 TON	2.5" Hot-Mix Asphalt, Type C, per TxDOT Item 340-6034, complete and in place for	$_____	$_____
59.2	29,500 CY	12.5" Caliche Flexible Base, per TxDOT Item 247-6041, compacted, complete and in place for	$_____	$_____
60.2	84,500 SY	Mix and Compact Lime, Water, with 10" of Base, per TxDOT Item 260-6054, compacted, complete and in place for	$_____	$_____
61.2	1,575 TON	Lime (HYD, COM, OR QK (SLURRY)), per TxDOT Item 260-6016, compacted, complete and in place for	$_____	$_____

TOTAL ROADWAY SECTION – ALTERNATE - 2 **$**_____

WRITTEN IN WORDS _____

_____

PROJECT TOTALS

TOTAL BASE PRICE ITEMS SUBTOTAL **$** _____

TOTAL ROADWAY SECTION SUBTOTAL **$** _____

TOTAL PROJECT PRICE
W/ROADWAY SECTION **$** _____

WRITTEN IN WORDS _____

_____

TOTAL BASE PRICE ITEMS SUBTOTAL **$** _____

TOTAL ROADWAY SECTION ALT-1 SUBTOTAL **$** _____

TOTAL PROJECT PRICE (ALT-1)
W/ROADWAY SECTION **$** _____

WRITTEN IN WORDS _____

_____

TOTAL BASE PRICE ITEMS SUBTOTAL **$** _____

TOTAL ROADWAY SECTION ALT-2 SUBTOTAL **$** _____

TOTAL PROJECT PRICE
W/ROADWAY SECTION **$** _____

WRITTEN IN WORDS _____

_____

CONTRACTOR: ESPEJO GATES ROAD IMPROVEMENTS

CONTRACTOR

_____

SIGNATURE **TITLE**

_____

ADDRESS **CITY/STATE** **ZIP CODE**

_____

TELEPHONE NUMBER **FAX NUMBER**
(_____)_____

NOTE:

ALL PROPOSED ITEMS WILL BE PAID FOR WHEN COMPLETE IN PLACE, TESTED, APPROVED BY THE ENGINEER AND ACCEPTED BY THE OWNER, AND WHEN ALL CONSTRUCTION DEBRIS AND OTHER CONSTRUCTION MATERIALS ARE CLEARED FROM SITE. ADHERENCE TO STORM WATER POLLUTION PREVENTION PRACTICES, CONSTRUCTION TRAFFIC CONTROLS (SIGNS, BARRICADES, CONES) AND ENVIROMENTAL PRACTICES AS REQUIRED, WHICH ARE SUBSIDIARY TO UNIT COSTS FOR THE ROADWAY/BRIDGE/CULVERT IMPROVEMENT PROJECT. ALL BID ITEMS SHALL INCLUDE ANY ADDITIONAL WORK REQUIRED FOR THE INSTALLION OF THE ITEMS IDENTIFIED AND DESIGN AS REPRESENTED ON THE PLANS. IT IS THE REPSONSIBILTY OF THE BIDDER TO REVIEW THE PLANS AND VISIT THE PROJECT SITE PRIOR TO SUBMITTING THEIR FINAL BID.

Insurance Requirements for Proposals:
Revised October 13, 2010

NON CONSTRUCTION PROPOSALS:

Insurance Requirements

The successful proposer(s) shall furnish the County with original copies of valid insurance policies herein required upon execution of the contract and shall maintain said policies in full force and effect at all times during the term of this contract.

(a) Commercial General Liability insurance at minimum combined single limits of $1,000,000_per-occurrence and $2,000,000 general aggregate for bodily injury and property damage, Coverage must be amended to provide for an each-project aggregate limit of insurance. An alternative would be to have separate limits for all lines of General Liability coverage for each project.

(b) Workers Compensation insurance at statutory limits, including Employers Liability coverage a minimum limits of $1,000,000 each-occurrence each accident/$1,000,000 by disease each-occurrence/$1,000,000 by disease aggregate.

(c) Commercial Automobile Liability insurance at minimum combined single limits of $1,000,000_per-occurrence for bodily injury and property damage, including owned, non-owned, and hired car coverage.

(d) Any Subcontractor(s) hired by the Contractor shall maintain insurance coverage equal to that required of the Contractor. It is the responsibility of the Contractor to assure compliance with this provision. The County of Webb accepts no responsibility arising from the conduct, or lack of conduct, of the Subcontractor.

(e) A Comprehensive General Liability insurance form may be used in lieu of a Commercial General Liability insurance form. In this event, coverage must be written on an occurrence basis, at limits of $1,000,000 each-occurrence, combined single limit, and coverage must include a broad form Comprehensive General Liability Endorsement.

(f) With reference to the foregoing insurance requirement, Contractor shall specifically endorse applicable insurance policies as follows:

1. The County of Webb shall be named as an additional insured with respect to General Liability and Automobile Liability.
2. All liability policies shall contain no cross liability exclusions or insured versus insured restrictions.
3. A waiver of subrogation in favor of the County of Webb shall be contained in the Workers compensation, and all liability policies.
4. All insurance policies shall be endorsed to require the insurer to immediately notify the County of Webb of any material change in the insurance coverage.
5. All insurance policies shall be endorsed to the effect that the County of Webb will receive at least sixty- (60) days' notice prior to cancellation or non-renewal of the insurance.
6. All insurance policies, which name The County of Webb as an additional insured, must be endorsed to read as primary coverage regardless of the application of other insurance.

7. Required limits may be satisfied by any combination of primary and umbrella liability insurances.
8. Contractor may maintain reasonable and customary deductibles, subject to approval by the County of Webb.
9. Insurance must be purchased from insurers that are financially acceptable to the County of Webb. Insurer must be rated A- or greater by AM Best Rating with an admitted carrier licensed by the Texas Department of Insurance.

(g) All insurance must be written on forms filed with and approved by the Texas Department of Insurance. Certificates of Insurance shall be prepared and executed by the insurance company or its authorized agent and shall contain provisions representing and warranting the following:
   1. Sets forth all endorsements and insurance coverage's according to requirements and instructions contained herein.
   2. Shall specifically set forth the notice-of-cancellation or termination provisions to The County of Webb.

(h) Upon request, Contractor shall furnish The County of Webb with certified copies of all insurance policies.

<u>CONSTRUCTION PROPOSALS:</u>

INSURANCE REQUIREMENTS

When required and specified in the County of Webb proposal specifications, the successful proposer(s) shall furnish the County with original copies of valid insurance policies herein required upon execution of the contract and shall maintain said policies in full force and effect at all times during the term of this contract.

(a) Commercial General Liability insurance at minimum combined single limits of $1,000,000_per-occurrence and $2,000,000 general aggregate for bodily injury and property damage, which coverage shall include products/completed operations ($1,000,000 products/ completed operations aggregate), and XCU (Explosion, Collapse, Underground) hazards. Coverage for products/completed operations must be maintained for at least two (2) years after the construction work has been completed. Coverage must be amended to provide for an each-project aggregate limit of insurance. An alternative would be to have separate limits for all lines of General Liability coverage for each project.

(i) Workers Compensation insurance at statutory limits, including Employers Liability coverage a minimum limits of $1,000,000 each-occurrence each accident/$1,000,000 by disease each-occurrence/$1,000,000 by disease aggregate.

(j) Commercial Automobile Liability insurance at minimum combined single limits of $1,000,000_per-occurrence for bodily injury and property damage, including owned, non-owned, and hired car coverage.

(k) Any Subcontractor(s) hired by the Contractor shall maintain insurance coverage equal to that required of the Contractor. It is the responsibility of the Contractor to assure compliance with this provision. The County of Webb accepts no responsibility arising from the conduct, or lack of conduct, of the Subcontractor.

(l) A Comprehensive General Liability insurance form may be used in lieu of a Commercial General Liability insurance form. In this event, coverage must be written on an occurrence basis, at limits of $1,000,000 each-occurrence, combined single limit, and coverage must include a broad form Comprehensive General Liability Endorsement, products/completed operations, XCU hazards, and contractual liability.

(m) With reference to the foregoing insurance requirement, Contractor shall specifically endorse applicable insurance policies as follows:

10. The County of Webb shall be named as an additional insured with respect to General Liability and Automobile Liability.
11. All liability policies shall contain no cross liability exclusions or insured versus insured restrictions.
12. A waiver of subrogation in favor of the County of Webb shall be contained in the Workers compensation, Builders Risk, and all liability policies.
13. All insurance policies shall be endorsed to require the insurer to immediately notify The County of Webb of any material change in the insurance coverage.
14. All insurance policies shall be endorsed to the effect that The County of Webb will receive at least sixty- (60) days' notice prior to cancellation or non-renewal of the insurance.
15. All insurance policies, which name The County of Webb as an additional insured, must be endorsed to read as primary coverage regardless of the application of other insurance.
16. Required limits may be satisfied by any combination of primary and umbrella liability insurances.
17. Contractor may maintain reasonable and customary deductibles, subject to approval by The County of Webb.
18. Insurance must be purchased from insurers that are financially acceptable to the County of Webb. Insurer must be rated A- or greater by AM Best Rating with an admitted carrier licensed by the Texas Department of Insurance.

(n) All insurance must be written on forms filed with and approved by the Texas Department of Insurance. Certificates of Insurance shall be prepared and executed by the insurance company or its authorized agent and shall contain provisions representing and warranting the following:

3. Sets forth all endorsements and insurance coverage's according to requirements and instructions contained herein.
4. Shall specifically set forth the notice-of-cancellation or termination provisions to The County of Webb.

(o) Upon request, Contractor shall furnish The County of Webb with certified copies of all insurance policies.

NOTICE OF AWARD

Project: **Espejo Gates Roadway Improvements**

To:

The County of Webb has considered the proposals submitted for the above described project in response to its advertisement for proposal dated _____**, 2016,** and related information to Proposers.

You are hereby notified that your proposal in the net amount of **$**_____ has been favorable considered for the project by the Commissioners Court at its regular meeting on _____**, 2016.** Pursuant to the information to Proposers you are asked to sign the proposed Contract (in five duplicate originals) and to return the same, along with the required Certificate of Insurance, and Payment Bond and Performance Bond within ten (10) days of your receipt of this Notice, for the approval and signature of the Owner.

For the purpose of effective date of the required Certificate of Insurance, and the Performance Bond and the Payment Bond, the date of _____**, 2016** may be considered the date of the contract, if the Documents are approved by the Owner.

If you fail to submit the signed Contract Performance and Payment Bonds, and the Certificate of Insurance within ten (10) working days from your receipt of this Notice, your proposal will be considered as withdrawn and your bid bond will be forfeited, unless an extension for submittals has been requested in writing and approved by the County.

The Construction Contract time of _____ (____) working/calendar days is to be strictly adhered to and Contractor agrees to pay liquidated damages for late completion an amount of $_____ for each consecutive day exceeding the contract time allotted.

You are asked to acknowledge receipt of this Notice by signing in the appropriate place below.

Dated this the ____ **day of _____ of 2016.**

_____
Owner

ACKNOWLEDGMENT:

Receipt of this Notice is hereby acknowledged

_____

Dated this _____

_____
Authorized Signature
Title:_____

NOTICE TO PROCEED

Date: _____

To: _____

Project: Espejo Gates Roadway Improvements

In accordance with the construction contract dated _____ you are hereby authorized to proceed on_____.
Contract time is _____.__**Completion date for the project is approximately _____, _____.**

_____
Owner

The above NOTICE TO PROCEED is hereby acknowledged by

_____

on this the _____ day of _____.

_____
Authorized Signature

_____
Typed Name:

Title: _____

PERFORMANCE BOND

(As required by Chapter 2253, Texas Government Code)

THE STATE OF {}
COUNTY OF {}

KNOW ALL MEN BY THESE PRESENTS: That we (1)_____
_____ a (2) _____
_____ of hereafter called Principal and (3) _____
_____of _____, State of _____
_____, hereinafter called the Surety, are held and firmly bound unto (4) _____
_____ of _____
hereinafter called Owner, in the penal sum of _____
_____ ($_____)
Dollars in lawful money of the United Stated, to be paid in (5)

WEBB COUNTY, TEXAS

_____ for the payment of which sum well and truly to be made, we bind ourselves, our heirs, executors, administrators and successors, jointly and severally, firmly by these presents.

THE CONDITIONS OF THIS OBLIGATION is such that Whereas, the Principal entered into a certain Contract with (6) _____
the Owner, dated the _____ day of _____ a copy of which is hereto attached and made a part hereof for the Construction of:

_____

_____

_____
(hereinafter called the "Work")

These notes refer to the numbers in body of Contract above:

Date of Bond must not be prior to Date of Contract.

(1) Correct name of Contractor.

_____

(2) A Corporation, or Partnership or an Individual, as case may be.
(3) Correct name of Surety.
(4) Correct name of Owner.
(5) County and State.
(6) Owner.

NOW THEREFORE, if the Principals shall well, truly and faithfully perform the work in accordance with the Plans, Specifications and Contract Documents during the original term thereof, and any extensions thereof which may be granted by the Owner with or without notice to the Surety, and if he shall satisfy all claims and demands incurred under such Contract, and shall fully indemnify and save harmless the Owner from all costs and damages which it may suffer by reason of failure to do so, and shall reimburse and repay the owner all outlay and expense which the Owner may incur in making good any default, then this obligation shall be void; otherwise to remain in full force and effect.

PROVIDED FURTHER, that if any legal action be filed upon this Bond, venue shall lie WEBB County, State of Texas, and that the said surety, for value received hereby stipulates and agrees that no change, extension of time, alteration or addition to the terms of the Contract or to the work to be performed thereunder or the Specifications accompanying the same shall in any wise affect its obligation on this Bond, and it does hereby waive notice of any such change, extension of time, alteration or addition to the terms of the Contract or to the work or to the Specifications.

IN WITNESS WHEREOF, this Instrument is executed in six counterparts, each one of which shall be deemed an original, this the _____ day of _____.

ATTEST:

_____ _____
(Principal) Secretary PRINCIPAL

By:_____

(SEAL) _____
Address (State and Zip Code)

_____ _____
Witness as to Principal Telephone Number

_____
Address (State and Zip Code)

ATTEST:

_____
Secretary

(SEAL)

_____
(Surety) Secretary

(SEAL)

_____
Witness as to Surety

_____
Address (State and Zip Code)

SURETY: (Surety)

By: _____

_____
Address (State and Zip Code)

_____
Telephone No. (Area Code)

PAYMENT BOND

(As required by Chapter 2253, Texas Government Code)

THE STATE OF {}
COUNTY OF {}

KNOW ALL MEN BY THESE PRESENTS: That we (1) _____
_____(2) _____
of _____hereinafter called Principal and (3) _____
of _____, State of _____, hereinafter called
the Surety, are held and firmly bound unto (4) _____of
_____ hereinafter called Owner, and unto all
Persons, Firms, and Corporations who may furnish materials for, or perform labor upon
the building or improvements hereinafter referred to in the penal sum of _____
_____ ($_____)
Dollars in lawful money of the United Stated, to be paid in (5) WEBB COUNTY, TEXAS
for the payment of which sum well and truly to be made, we bind ourselves, our heirs,
executors, administrators and successors, jointly and severally, firmly by these presents.

THE CONDITIONS OF THIS OBLIGATION is such that Whereas, the Principal entered
into a certain Contract with (6) _____
the Owner, dated the _____ day of _____ a copy
of which is hereto attached and made a part hereof for the construction of:

_____

_____
(hereinafter called the "Work")

These footnotes refer to the numbers in body of contract above:

Date of Bond must not be prior to Date of Contract.

(1) Correct name of Contractor.
(2) A Corporation, or Partnership or an Individual, as case may be.
(3) Correct name of Surety.
(4) Correct name of Owner.
(5) County and State.
(6) Owner.

NOW THEREFORE, if the Principals shall well, truly and faithfully perform the work in accordance with the Plans, Specifications and Contract Documents during the original term thereof, and any extensions thereof which may be granted by the Owner with or without notice to the Surety, and if he shall satisfy all claims and demands incurred under such Contract, then this obligation shall be null and void; otherwise to remain in full force and effect.

This Bond is made and entered into solely for the protection of all claimants supplying labor and material in the prosecution of the work provided for in said Contract, and all such claimants shall have a direct right of action under the Bond as provided in Section 2253.073, Texas Government Code.

PROVIDED FURTHER, that if any legal action be filed upon this Bond, venue shall lie WEBB County, State of Texas, and that no change, extension of time, alteration or addition to the terms of the Contract or to the work to be performed thereunder or the Specifications accompanying the same shall in any wise affect its obligation on this Bond, and it does hereby waive notice of any such change, extension of time, alteration or addition to the terms of the Contract or to the work or to the Specifications.

PROVIDED FURTHER, that no final settlement between the Owner and the Contractor shall abridge the right of any beneficiary hereunder, whose claim may be unsatisfied.

IN WITNESS WHEREOF, this instrument is executed in six counterparts, each one of which shall be deemed an original, this the _____ day of _____.

ATTEST:

_____	_____
(Principal) Secretary	PRINCIPAL
	By: _____
(SEAL)	_____
	Address (State and Zip Code)
_____	_____
Witness as to Principal	Telephone Number
_____	
(SEAL)	
	_____
	Surety

ATTEST:

_____
(Surety Secretary)

By:_____

(SEAL)

_____
Address (State and Zip Code)

_____
Telephone Number

NOTE: If Contractor is Partnership, all Partners should execute Bond.

PERFORMANCE - PAYMENT BOND FORM
M-24, 25, Attach. Sa

_____ _____ (SEAL)
Individual Principal

_____ _____
Address (State and Zip Code) Business - Address

_____ _____
Telephone Number (Area Code) Telephone Number (Area Code)

ATTEST: _____
Corporate Principal

_____ _____
(State and Zip Code) Business Address Name

_____
Telephone Number (Area Code)

_____ _____
Address (State and Zip Code) (Affix Corporate Seal)

By: _____

ATTEST: _____
Address (State and Zip Code)

_____
Corporate

_____
Surety

_____

_____
Business Address

_____
(Affix Corporate Seal)

_____
Telephone:

CERTIFICATE AS TO CORPORATE PRINCIPAL

I, _____, certify that I am the _____, Secretary of the Corporation named as Principal in the within Bond; that _____ _____, who signed the said Bond on behalf of the Principal was then _____, of said Corporation; that I know his signature thereof is genuine; and that said Bond was duly signed, sealed, an attested for and in behalf of said Corporation by authority of its governing body.

_____
Title

_____ _____

Date: _____ (Affix Corporate Seal)

_____
Telephone No.

The rate of premium on this Bond is _____ per thousand. Total of premium charge

$_____

NOTE: The above must be filled in by Corporate Surety. Power-of-Attorney of person signed for Surety company must be attached.

CONTRACT TIME & LIQUIDATED DAMAGES

Project: **Espejo Gates Roadway Improvements**

The Contract Performance for this project shall be **two hundred eighty five (285) calendar days** defined in the Specifications.

The time set forth in the proposal for the completion of the work is an essential element of the Contract. For each day under the conditions described in the preceding Paragraph that any work shall remain uncompleted after the expiration of the days specified in the Contract, together with any additional days allowed, the amount per day given in the following schedule will be deducted from the money due or to become due the Contractor, as liquidated damages for late completion of the specified work.

FOR AMOUNT OF CONTRACT		
From More Than	**To and Including**	**Amount of Penalty Per Day over Contract Time**
$0	$100,000	$200
100,000	500,000	400
500,000	1,000,000	550
1,000,000	2,000,000	700
2,000,000	5,000,000	850
5,000,000	10,000,000	1,200
10,000,000	15,000,000	1,500
15,000,000	20,000,000	1,700
20,000,000	Over 20,000,000	2,500

SUGGESTED FORM OF AGREEMENT BETWEEN OWNER AND CONTRACTOR FOR CONSTRUCTION CONTRACT (STIPULATED PRICE)

THIS AGREEMENT is by and between Webb County ("Owner") and _____ ("Contractor").

Owner and Contractor hereby agree as follows:

ARTICLE 1 – WORK

1.01 Contractor shall complete all Work as specified or indicated in the Contract Documents. The Work is generally described as follows:

The work consist of roadway reconstruction, grading, lime treatment, reworking subgrade, addition of base material, hot-mixed asphalt concrete pavement, drainage structures, roadside swales, and pavement marking.

ARTICLE 2 – THE PROJECT

2.01 The Project for which the Work under the Contract Documents may be the whole or only a part is generally described as follows:

Webb County Espejo Gates Roadway Improvements Project

ARTICLE 3 – ENGINEER

3.01 The Project has been designed by S&B Infrastructure, LTD. (Engineer), which is to act as Owner's representative, assume all duties and responsibilities, and have the rights and authority assigned to Engineer in the Contract Documents in connection with the completion of the Work in accordance with the Contract Documents.

ARTICLE 4 – CONTRACT TIMES

4.01 *Time of the Essence*

A. All time limits for Milestones, if any, Substantial Completion, and completion and readiness for final payment as stated in the Contract Documents are of the essence of the Contract.

Copyright © 2007 National Society of Professional Engineers for EJCDC. All rights reserved.

4.02 *Days to Achieve Substantial Completion and Final Payment*

A. The Work will be substantially completed within **270** calendar days after the date when the Contract Times commence to run as provided in Paragraph 2.03 of the General Conditions, and completed and ready for final payment in accordance with Paragraph 14.07 of the General Conditions within **285** days after the date when the Contract Times commence to run.

~~4.03 *Liquidated Damages (Removed for this project)*~~

~~A. Contractor and Owner recognize that time is of the essence as stated in Paragraph 4.01 above and that Owner will suffer financial loss if the Work is not completed within the times specified in Paragraph 4.02 above, plus any extensions thereof allowed in accordance with Article 12 of the General Conditions. The parties also recognize the delays, expense, and difficulties involved in proving in a legal or arbitration proceeding the actual loss suffered by Owner if the Work is not completed on time. Accordingly, instead of requiring any such proof, Owner and Contractor agree that as liquidated damages for delay (but not as a penalty), Contractor shall pay Owner $500.00 for each day that expires after the time specified in Paragraph 4.02 above for Substantial Completion until the Work is substantially complete. After Substantial Completion, if Contractor shall neglect, refuse, or fail to complete the remaining Work within the Contract Time or any proper extension thereof granted by Owner, Contractor shall pay Owner $ 1,000.00 for each day that expires after the time specified in Paragraph 4.02 above for completion and readiness for final payment until the Work is completed and ready for final payment.~~

~~B. **(EJCDC C-520 HAS BEEN MODIFIED TO INCLUDE SECTION 4.03B**) The amount of liquidated damages, as specified in Section 4.03A, shall include cost to the Engineer for additional construction services.~~

~~**ARTICLE 5 – CONTRACT PRICE (REMOVE FROM THIS PROJECT)**~~

~~5.01 Owner shall pay Contractor for completion of the Work in accordance with the Contract Documents an amount in current funds equal to the sum of the amounts determined pursuant to Paragraphs 5.01.A below:~~

~~A. For all Unit Price Work, an amount equal to the sum of the established unit price for each separately identified item of Unit Price Work times the actual quantity of that item:~~

~~UNIT PRICE WORK~~

~~Item No.~~	~~Description~~	~~Unit~~	~~Estimated Quantity~~	~~Bid Unit Price~~	~~Bid Price~~

Copyright © 2007 National Society of Professional Engineers for EJCDC. All rights reserved.

~~Total of all Bid Prices (Unit Price Work)~~ ~~$_____~~

~~The Bid prices for Unit Price Work set forth as of the Effective Date of the Agreement are based on estimated quantities. As provided in Paragraph 11.03 of the General Conditions, estimated quantities are not guaranteed, and determinations of actual quantities and classifications are to be made by Engineer as provided in Paragraph 9.07 of the General Conditions.~~

ARTICLE 6 – PAYMENT PROCEDURES

6.01 *Submittal and Processing of Payments*

A. Contractor shall submit Applications for Payment in accordance with Article 14 of the General Conditions. Applications for Payment will be processed by Engineer as provided in the General Conditions.

6.02 *Progress Payments; Retainage*

A. Owner shall make progress payments on account of the Contract Price on the basis of Contractor's Applications for Payment on or about the 25th day of each month during performance of the Work as provided in Paragraph 6.02.A.1 below. All such payments will be measured by the schedule of values established as provided in Paragraph 2.07.A of the General Conditions (and in the case of Unit Price Work based on the number of units completed) or, in the event there is no schedule of values, as provided in the General Requirements.

1. Prior to Substantial Completion, progress payments will be made in an amount equal to the percentage indicated below but, in each case, less the aggregate of payments previously made and less such amounts as Engineer may determine or Owner may withhold, including but not limited to liquidated damages, in accordance with Paragraph 14.02 of the General Conditions.

a. 90 percent of Work completed (with the balance being retainage). If the Work has been 50 percent completed as determined by Engineer, and if the character and progress of the Work have been satisfactory to Owner and Engineer, then as long as the character and progress of the Work remain satisfactory to Owner and Engineer, there will be no additional retainage; and

b. 90 percent of cost of materials and equipment not incorporated in the Work (with the balance being retainage).

B. Upon Substantial Completion, Owner shall pay an amount sufficient to increase total payments to Contractor to 100 percent of the Work completed, less such amounts as Engineer shall determine in accordance with Paragraph 14.02.B.5 of the General Conditions and less 200 percent of Engineer's estimate of the value of Work to be completed or corrected as

Copyright © 2007 National Society of Professional Engineers for EJCDC. All rights reserved.

shown on the tentative list of items to be completed or corrected attached to the certificate of Substantial Completion.

6.03 *Final Payment*

A. Upon final completion and acceptance of the Work in accordance with Paragraph 14.07 of the General Conditions, Owner shall pay the remainder of the Contract Price as recommended by Engineer as provided in said Paragraph 14.07.

ARTICLE 7 – INTEREST

7.01 All moneys not paid when due as provided in Article 14 of the General Conditions shall bear interest at the rate of 0.06 percent per annum.

ARTICLE 8 – CONTRACTOR'S REPRESENTATIONS

8.01 In order to induce Owner to enter into this Agreement, Contractor makes the following representations:

A. Contractor has examined and carefully studied the Contract Documents and the other related data identified in the Bidding Documents.

B. Contractor has visited the Site and become familiar with and is satisfied as to the general, local, and Site conditions that may affect cost, progress, and performance of the Work.

C. Contractor is familiar with and is satisfied as to all federal, state, and local Laws and Regulations that may affect cost, progress, and performance of the Work.

D. Contractor has carefully studied all: (1) reports of explorations and tests of subsurface conditions at or contiguous to the Site and all drawings of physical conditions relating to existing surface or subsurface structures at the Site (except Underground Facilities), if any, that have been identified in Paragraph SC-4.02 of the Supplementary Conditions as containing reliable "technical data," and (2) reports and drawings of Hazardous Environmental Conditions, if any, at the Site that have been identified in Paragraph SC-4.06 of the Supplementary Conditions as containing reliable "technical data."

E. Contractor has considered the information known to Contractor; information commonly known to contractors doing business in the locality of the Site; information and observations obtained from visits to the Site; the Contract Documents; and the Site-related reports and drawings identified in the Contract Documents, with respect to the effect of such information, observations, and documents on (1) the cost, progress, and performance of the Work; (2) the means, methods, techniques, sequences, and procedures of construction to be employed by Contractor, including any specific means, methods, techniques, sequences, and procedures of construction expressly required by the Contract Documents; and (3) Contractor's safety precautions and programs.

Copyright © 2007 National Society of Professional Engineers for EJCDC. All rights reserved.

F. Based on the information and observations referred to in Paragraph 8.01.E above, Contractor does not consider that further examinations, investigations, explorations, tests, studies, or data are necessary for the performance of the Work at the Contract Price, within the Contract Times, and in accordance with the other terms and conditions of the Contract Documents.

G. Contractor is aware of the general nature of work to be performed by Owner and others at the Site that relates to the Work as indicated in the Contract Documents.

H. Contractor has given Engineer written notice of all conflicts, errors, ambiguities, or discrepancies that Contractor has discovered in the Contract Documents, and the written resolution thereof by Engineer is acceptable to Contractor.

I. The Contract Documents are generally sufficient to indicate and convey understanding of all terms and conditions for performance and furnishing of the Work.

ARTICLE 9 – CONTRACT DOCUMENTS

9.01 *Contents*

A. The Contract Documents consist of the following:

1. This Agreement (pages 1 to 8, inclusive).
2. Performance bond (pages 1 to 4, inclusive).
3. Payment bond (pages 1 to 4, inclusive).
4. Other bonds (pages _____ to _____, inclusive).
   a. _____ (pages _____ to _____, inclusive).
   b. _____ (pages _____ to _____, inclusive).
   c. _____ (pages _____ to _____, inclusive).
5. General Conditions (pages 1 to 68, inclusive).
6. Supplementary Conditions (pages 1 to 9, inclusive).
7. Specifications as listed in the table of contents of the Project Manual.
8. Drawings consisting of __ sheets with each sheet bearing the following general title: __.
9. Addenda (numbers _____ to _____, inclusive).
10. Exhibits to this Agreement (enumerated as follows):
    a. Contractor's Bid (pages _____ to _____, inclusive).

Copyright © 2007 National Society of Professional Engineers for EJCDC. All rights reserved.

b. Documentation submitted by Contractor prior to Notice of Award (pages _____ to _____, inclusive).

c. *[List other required attachments (if any), such as documents required by funding or lending agencies].*

11. The following which may be delivered or issued on or after the Effective Date of the Agreement and are not attached hereto:

a. Notice to Proceed (pages _____ to _____, inclusive).

b. Work Change Directives.

c. Change Orders.

B. The documents listed in Paragraph 9.01.A are attached to this Agreement (except as expressly noted otherwise above).

C. There are no Contract Documents other than those listed above in this Article 9.

D. The Contract Documents may only be amended, modified, or supplemented as provided in Paragraph 3.04 of the General Conditions.

ARTICLE 10 – MISCELLANEOUS

10.01 *Terms*

A. Terms used in this Agreement will have the meanings stated in the General Conditions and the Supplementary Conditions.

10.02 *Assignment of Contract*

A. No assignment by a party hereto of any rights under or interests in the Contract will be binding on another party hereto without the written consent of the party sought to be bound; and, specifically but without limitation, moneys that may become due and moneys that are due may not be assigned without such consent (except to the extent that the effect of this restriction may be limited by law), and unless specifically stated to the contrary in any written consent to an assignment, no assignment will release or discharge the assignor from any duty or responsibility under the Contract Documents.

10.03 *Successors and Assigns*

A. Owner and Contractor each binds itself, its partners, successors, assigns, and legal representatives to the other party hereto, its partners, successors, assigns, and legal representatives in respect to all covenants, agreements, and obligations contained in the Contract Documents.

Copyright © 2007 National Society of Professional Engineers for EJCDC. All rights reserved.

10.04 *Severability*

A. Any provision or part of the Contract Documents held to be void or unenforceable under any Law or Regulation shall be deemed stricken, and all remaining provisions shall continue to be valid and binding upon Owner and Contractor, who agree that the Contract Documents shall be reformed to replace such stricken provision or part thereof with a valid and enforceable provision that comes as close as possible to expressing the intention of the stricken provision.

10.05 *Contractor's Certifications*

A. Contractor certifies that it has not engaged in corrupt, fraudulent, collusive, or coercive practices in competing for or in executing the Contract. For the purposes of this Paragraph 10.05:

1. "corrupt practice" means the offering, giving, receiving, or soliciting of any thing of value likely to influence the action of a public official in the bidding process or in the Contract execution;

2. "fraudulent practice" means an intentional misrepresentation of facts made (a) to influence the bidding process or the execution of the Contract to the detriment of Owner, (b) to establish Bid or Contract prices at artificial non-competitive levels, or (c) to deprive Owner of the benefits of free and open competition;

3. "collusive practice" means a scheme or arrangement between two or more Bidders, with or without the knowledge of Owner, a purpose of which is to establish Bid prices at artificial, non-competitive levels; and

4. "coercive practice" means harming or threatening to harm, directly or indirectly, persons or their property to influence their participation in the bidding process or affect the execution of the Contract.

10.06 *Other Provisions*

Copyright © 2007 National Society of Professional Engineers for EJCDC. All rights reserved.

IN WITNESS WHEREOF, Owner and Contractor have signed this Agreement. Counterparts have been delivered to Owner and Contractor. All portions of the Contract Documents have been signed or have been identified by Owner and Contractor or on their behalf.

This Agreement will be effective on _____ (which is the Effective Date of the Agreement).

OWNER:

_____

By: _____

Title: _____

Attest: _____

Title: _____

Address for giving notices:

_____

_____

_____

(If Owner is a corporation, attach evidence of authority to sign. If Owner is a public body, attach evidence of authority to sign and resolution or other documents authorizing execution of this Agreement.)

CONTRACTOR

_____

By: _____

Title: _____

(If Contractor is a corporation, a partnership, or a joint venture, attach evidence of authority to sign.)

Attest: _____

Title: _____

Address for giving notices:

_____

_____

_____

License No.: _____

(Where applicable)

Agent for service of process:

_____

Copyright © 2007 National Society of Professional Engineers for EJCDC. All rights reserved.

This document has important legal consequences; consultation with an attorney is encouraged with respect to its use or modification. This document should be adapted to the particular circumstances of the contemplated Project and the controlling Laws and Regulations.

STANDARD GENERAL CONDITIONS OF THE CONSTRUCTION CONTRACT

Prepared by

ENGINEERS JOINT CONTRACT DOCUMENTS COMMITTEE

and

Issued and Published Jointly by

AMERICAN COUNCIL OF ENGINEERING COMPANIES

ASSOCIATED GENERAL CONTRACTORS OF AMERICA

AMERICAN SOCIETY OF CIVIL ENGINEERS

PROFESSIONAL ENGINEERS IN PRIVATE PRACTICE
A Practice Division of the
NATIONAL SOCIETY OF PROFESSIONAL ENGINEERS

Endorsed by

CONSTRUCTION SPECIFICATIONS INSTITUTE

Copyright © 2007 National Society of Professional Engineers for EJCDC. All rights reserved.

These General Conditions have been prepared for use with the Suggested Forms of Agreement Between Owner and Contractor (EJCDC C-520 or C-525, 2007 Editions). Their provisions are interrelated and a change in one may necessitate a change in the other. Comments concerning their usage are contained in the Narrative Guide to the EJCDC Construction Documents (EJCDC C-001, 2007 Edition). For guidance in the preparation of Supplementary Conditions, see Guide to the Preparation of Supplementary Conditions (EJCDC C-800, 2007 Edition).

Copyright © 2007 National Society of Professional Engineers
1420 King Street, Alexandria, VA 22314-2794
(703) 684-2882
www.nspe.org

American Council of Engineering Companies
1015 15th Street N.W., Washington, DC 20005
(202) 347-7474
www.acec.org

American Society of Civil Engineers
1801 Alexander Bell Drive, Reston, VA 20191-4400
(800) 548-2723
www.asce.org

Associated General Contractors of America
2300 Wilson Boulevard, Suite 400, Arlington, VA 22201-3308
(703) 548-3118
www.agc.org

The copyright for this EJCDC document is owned jointly by the four
EJCDC sponsoring organizations and held in trust for their benefit by NSPE.

Copyright © 2007 National Society of Professional Engineers for EJCDC. All rights reserved.

STANDARD GENERAL CONDITIONS OF THE CONSTRUCTION CONTRACT

TABLE OF CONTENTS

Page

Article 1 – Definitions and Terminology 1
1.01 Defined Terms 1
1.02 Terminology 5

Article 2 – Preliminary Matters 6
2.01 Delivery of Bonds and Evidence of Insurance 6
2.02 Copies of Documents 6
2.03 Commencement of Contract Times; Notice to Proceed 6
2.04 Starting the Work 7
2.05 Before Starting Construction 7
2.06 Preconstruction Conference; Designation of Authorized Representatives 7
2.07 Initial Acceptance of Schedules 7

Article 3 – Contract Documents: Intent, Amending, Reuse 8
3.01 Intent 8
3.02 Reference Standards 8
3.03 Reporting and Resolving Discrepancies 9
3.04 Amending and Supplementing Contract Documents 9
3.05 Reuse of Documents 10
3.06 Electronic Data 10

Article 4 – Availability of Lands; Subsurface and Physical Conditions; Hazardous Environmental Conditions; Reference Points 11
4.01 Availability of Lands 11
4.02 Subsurface and Physical Conditions 11
4.03 Differing Subsurface or Physical Conditions 12
4.04 Underground Facilities 13
4.05 Reference Points 14
4.06 Hazardous Environmental Condition at Site 14

Article 5 – Bonds and Insurance 16
5.01 Performance, Payment, and Other Bonds 16
5.02 Licensed Sureties and Insurers 17
5.03 Certificates of Insurance 17
5.04 Contractor's Insurance 17
5.05 Owner's Liability Insurance 19
5.06 Property Insurance 19
5.07 Waiver of Rights 20
5.08 Receipt and Application of Insurance Proceeds 21

Copyright © 2007 National Society of Professional Engineers for EJCDC. All rights reserved.

5.09 Acceptance of Bonds and Insurance; Option to Replace 22
5.10 Partial Utilization, Acknowledgment of Property Insurer 22

Article 6 – Contractor's Responsibilities 22
6.01 Supervision and Superintendence 22
6.02 Labor; Working Hours 22
6.03 Services, Materials, and Equipment 23
6.04 Progress Schedule 23
6.05 Substitutes and "Or-Equals" 23
6.06 Concerning Subcontractors, Suppliers, and Others 26
6.07 Patent Fees and Royalties 27
6.08 Permits 28
6.09 Laws and Regulations 28
6.10 Taxes 28
6.11 Use of Site and Other Areas 29
6.12 Record Documents 29
6.13 Safety and Protection 30
6.14 Safety Representative 31
6.15 Hazard Communication Programs 31
6.16 Emergencies 31
6.17 Shop Drawings and Samples 31
6.18 Continuing the Work 33
6.19 Contractor's General Warranty and Guarantee 33
6.20 Indemnification 34
6.21 Delegation of Professional Design Services 34

Article 7 – Other Work at the Site 35
7.01 Related Work at Site 35
7.02 Coordination 36
7.03 Legal Relationships 36

Article 8 – Owner's Responsibilities 36
8.01 Communications to Contractor 36
8.02 Replacement of Engineer 37
8.03 Furnish Data 37
8.04 Pay When Due 37
8.05 Lands and Easements; Reports and Tests 37
8.06 Insurance 37
8.07 Change Orders 37
8.08 Inspections, Tests, and Approvals 37
8.09 Limitations on Owner's Responsibilities 37
8.10 Undisclosed Hazardous Environmental Condition 38
8.11 Evidence of Financial Arrangements 38
8.12 Compliance with Safety Program 38

Article 9 – Engineer's Status During Construction 38
9.01 Owner's Representative 38

Copyright © 2007 National Society of Professional Engineers for EJCDC. All rights reserved.

9.02 Visits to Site 38
9.03 Project Representative 39
9.04 Authorized Variations in Work 39
9.05 Rejecting Defective Work 39
9.06 Shop Drawings, Change Orders and Payments 39
9.07 Determinations for Unit Price Work 40
9.08 Decisions on Requirements of Contract Documents and Acceptability of Work 40
9.09 Limitations on Engineer's Authority and Responsibilities 40
9.10 Compliance with Safety Program 41

Article 10 – Changes in the Work; Claims 41
10.01 Authorized Changes in the Work 41
10.02 Unauthorized Changes in the Work 41
10.03 Execution of Change Orders 41
10.04 Notification to Surety 42
10.05 Claims 42

Article 11 – Cost of the Work; Allowances; Unit Price Work 43
11.01 Cost of the Work 43
11.02 Allowances 46
11.03 Unit Price Work 46

Article 12 – Change of Contract Price; Change of Contract Times 47
12.01 Change of Contract Price 47
12.02 Change of Contract Times 48
12.03 Delays 48

Article 13 – Tests and Inspections; Correction, Removal or Acceptance of Defective Work 49
13.01 Notice of Defects 49
13.02 Access to Work 49
13.03 Tests and Inspections 49
13.04 Uncovering Work 50
13.05 Owner May Stop the Work 51
13.06 Correction or Removal of Defective Work 51
13.07 Correction Period 51
13.08 Acceptance of Defective Work 52
13.09 Owner May Correct Defective Work 52

Article 14 – Payments to Contractor and Completion 53
14.01 Schedule of Values 53
14.02 Progress Payments 53
14.03 Contractor's Warranty of Title 56
14.04 Substantial Completion 56
14.05 Partial Utilization 57
14.06 Final Inspection 58
14.07 Final Payment 58
14.08 Final Completion Delayed 59

Copyright © 2007 National Society of Professional Engineers for EJCDC. All rights reserved.

14.09 Waiver of Claims 59

Article 15 – Suspension of Work and Termination 60
15.01 Owner May Suspend Work 60
15.02 Owner May Terminate for Cause 60
15.03 Owner May Terminate For Convenience 61
15.04 Contractor May Stop Work or Terminate 61

Article 16 – Dispute Resolution 62
16.01 Methods and Procedures 62

Article 17 – Miscellaneous 62
17.01 Giving Notice 62
17.02 Computation of Times 63
17.03 Cumulative Remedies 63
17.04 Survival of Obligations 63
17.05 Controlling Law 63
17.06 Headings 63

Copyright © 2007 National Society of Professional Engineers for EJCDC. All rights reserved.

ARTICLE 1 – DEFINITIONS AND TERMINOLOGY

1.01 *Defined Terms*

A. Wherever used in the Bidding Requirements or Contract Documents and printed with initial capital letters, the terms listed below will have the meanings indicated which are applicable to both the singular and plural thereof. In addition to terms specifically defined, terms with initial capital letters in the Contract Documents include references to identified articles and paragraphs, and the titles of other documents or forms.

1. *Addenda*—Written or graphic instruments issued prior to the opening of Bids which clarify, correct, or change the Bidding Requirements or the proposed Contract Documents.

2. *Agreement*—The written instrument which is evidence of the agreement between Owner and Contractor covering the Work.

3. *Application for Payment*—The form acceptable to Engineer which is to be used by Contractor during the course of the Work in requesting progress or final payments and which is to be accompanied by such supporting documentation as is required by the Contract Documents.

4. *Asbestos*—Any material that contains more than one percent asbestos and is friable or is releasing asbestos fibers into the air above current action levels established by the United States Occupational Safety and Health Administration.

5. *Bid*—The offer or proposal of a Proposer ~~Bidder~~ submitted on the prescribed form setting forth the prices for the Work to be performed.

6. *Bidder*—The individual or entity who submits a ~~Bid~~ Proposal directly to Owner.

7. *Bidding Documents*—The ~~Bidding~~ Proposal Requirements and the proposed Contract Documents (including all Addenda).

8. *Bidding Requirements*—The advertisement or invitation to ~~bid~~ request for proposal, ~~Instructions to Bidders~~ Terms and Conditions, Bid security of acceptable form, if any, and the ~~Bid~~ Proposal Form with any supplements.

9. *Change Order*—A document recommended by Engineer which is signed by Contractor and Owner and authorizes an addition, deletion, or revision in the Work or an adjustment in the Contract Price or the Contract Times, issued on or after the Effective Date of the Agreement.

10. *Claim*—A demand or assertion by Owner or Contractor seeking an adjustment of Contract Price or Contract Times, or both, or other relief with respect to the terms of the Contract. A demand for money or services by a third party is not a Claim.

11. *Contract*—The entire and integrated written agreement between the Owner and Contractor concerning the Work. The Contract supersedes prior negotiations, representations, or agreements, whether written or oral.

Copyright © 2007 National Society of Professional Engineers for EJCDC. All rights reserved.

12. *Contract Documents*—Those items so designated in the Agreement. Only printed or hard copies of the items listed in the Agreement are Contract Documents. Approved Shop Drawings, other Contractor submittals, and the reports and drawings of subsurface and physical conditions are not Contract Documents.

13. *Contract Price*—The moneys payable by Owner to Contractor for completion of the Work in accordance with the Contract Documents as stated in the Agreement (subject to the provisions of Paragraph 11.03 in the case of Unit Price Work).

14. *Contract Times*—The number of days or the dates stated in the Agreement to: (i) achieve Milestones, if any; (ii) achieve Substantial Completion~~,~~ and (iii) complete the Work so that it is ready for final payment as evidenced by Engineer's written recommendation of final payment.

15. *Contractor*—The individual or entity with whom Owner has entered into the Agreement.

16. *Cost of the Work*—See Paragraph 11.01 for definition.

17. *Drawings*—That part of the Contract Documents prepared or approved by Engineer which graphically shows the scope, extent, and character of the Work to be performed by Contractor. Shop Drawings and other Contractor submittals are not Drawings as so defined.

18. *Effective Date of the Agreement*—The date indicated in the Agreement on which it becomes effective, but if no such date is indicated, it means the date on which the Agreement is signed and delivered by the last of the two parties to sign and deliver.

19. *Engineer*—The individual or entity named as such in the Agreement.

20. *Field Order*—A written order issued by Engineer which requires minor changes in the Work but which does not involve a change in the Contract Price or the Contract Times.

21. *General Requirements*—Sections of Division 1 of the Specifications.

22. *Hazardous Environmental Condition*—The presence at the Site of Asbestos, PCBs, Petroleum, Hazardous Waste, or Radioactive Material in such quantities or circumstances that may present a substantial danger to persons or property exposed thereto.

23. *Hazardous Waste*—The term Hazardous Waste shall have the meaning provided in Section 1004 of the Solid Waste Disposal Act (42 USC Section 6903) as amended from time to time.

24. *Laws and Regulations; Laws or Regulations*—Any and all applicable laws, rules, regulations, ordinances, codes, and orders of any and all governmental bodies, agencies, authorities, and courts having jurisdiction.

Copyright © 2007 National Society of Professional Engineers for EJCDC. All rights reserved.

25. *Liens*—Charges, security interests, or encumbrances upon Project funds, real property, or personal property.

26. *Milestone*—A principal event specified in the Contract Documents relating to an intermediate completion date or time prior to Substantial Completion of all the Work.

27. *Notice of Award*—The written notice by Owner to the Successful Proposer ~~Bidder~~ stating that upon timely compliance by the Successful Proposer ~~Bidder~~ with the conditions precedent listed therein, Owner will sign and deliver the Agreement.

28. *Notice to Proceed*—A written notice given by Owner to Contractor fixing the date on which the Contract Times will commence to run and on which Contractor shall start to perform the Work under the Contract Documents.

29. *Owner*—The individual or entity with whom Contractor has entered into the Agreement and for whom the Work is to be performed.

30. *PCBs*—Polychlorinated biphenyls.

31. *Petroleum*—Petroleum, including crude oil or any fraction thereof which is liquid at standard conditions of temperature and pressure (60 degrees Fahrenheit and 14.7 pounds per square inch absolute), such as oil, petroleum, fuel oil, oil sludge, oil refuse, gasoline, kerosene, and oil mixed with other non-Hazardous Waste and crude oils.

32. *Progress Schedule*—A schedule, prepared and maintained by Contractor, describing the sequence and duration of the activities comprising the Contractor's plan to accomplish the Work within the Contract Times.

33. *Project*—The total construction of which the Work to be performed under the Contract Documents may be the whole, or a part.

34. *Project Manual*—The bound documentary information prepared for bidding and constructing the Work. A listing of the contents of the Project Manual, which may be bound in one or more volumes, is contained in the table(s) of contents.

35. *Radioactive Material*—Source, special nuclear, or byproduct material as defined by the Atomic Energy Act of 1954 (42 USC Section 2011 et seq.) as amended from time to time.

36. *Resident Project Representative*—The authorized representative of Engineer who may be assigned to the Site or any part thereof.

37. *Samples*—Physical examples of materials, equipment, or workmanship that are representative of some portion of the Work and which establish the standards by which such portion of the Work will be judged.

38. *Schedule of Submittals*—A schedule, prepared and maintained by Contractor, of required submittals and the time requirements to support scheduled performance of related construction activities.

Copyright © 2007 National Society of Professional Engineers for EJCDC. All rights reserved.

39. *Schedule of Values*—A schedule, prepared and maintained by Contractor, allocating portions of the Contract Price to various portions of the Work and used as the basis for reviewing Contractor's Applications for Payment.

40. *Shop Drawings*—All drawings, diagrams, illustrations, schedules, and other data or information which are specifically prepared or assembled by or for Contractor and submitted by Contractor to illustrate some portion of the Work.

41. *Site*—Lands or areas indicated in the Contract Documents as being furnished by Owner upon which the Work is to be performed, including rights-of-way and easements for access thereto, and such other lands furnished by Owner which are designated for the use of Contractor.

42. *Specifications*—That part of the Contract Documents consisting of written requirements for materials, equipment, systems, standards and workmanship as applied to the Work, and certain administrative requirements and procedural matters applicable thereto.

43. *Subcontractor*—An individual or entity having a direct contract with Contractor or with any other Subcontractor for the performance of a part of the Work at the Site.

44. *Substantial Completion*—The time at which the Work (or a specified part thereof) has progressed to the point where, in the opinion of Engineer, the Work (or a specified part thereof) is sufficiently complete, in accordance with the Contract Documents, so that the Work (or a specified part thereof) can be utilized for the purposes for which it is intended. The terms "substantially complete" and "substantially completed" as applied to all or part of the Work refer to Substantial Completion thereof.

45. *Successful Bidder*—The Proposer ~~Bidder~~ submitting a responsive ~~Proposal~~ Bid to whom Owner makes an award.

46. *Supplementary Conditions*—That part of the Contract Documents which amends or supplements these General Conditions.

47. *Supplier*—A manufacturer, fabricator, supplier, distributor, materialman, or vendor having a direct contract with Contractor or with any Subcontractor to furnish materials or equipment to be incorporated in the Work by Contractor or Subcontractor.

48. *Underground Facilities*—All underground pipelines, conduits, ducts, cables, wires, manholes, vaults, tanks, tunnels, or other such facilities or attachments, and any encasements containing such facilities, including those that convey electricity, gases, steam, liquid petroleum products, telephone or other communications, cable television, water, wastewater, storm water, other liquids or chemicals, or traffic or other control systems.

49. *Unit Price Work*—Work to be paid for on the basis of unit prices.

50. *Work*—The entire construction or the various separately identifiable parts thereof required to be provided under the Contract Documents. Work includes and is the result of performing or providing all labor, services, and documentation necessary to produce such

Copyright © 2007 National Society of Professional Engineers for EJCDC. All rights reserved.

construction, and furnishing, installing, and incorporating all materials and equipment into such construction, all as required by the Contract Documents.

51. *Work Change Directive*—A written statement to Contractor issued on or after the Effective Date of the Agreement and signed by Owner and recommended by Engineer ordering an addition, deletion, or revision in the Work, or responding to differing or unforeseen subsurface or physical conditions under which the Work is to be performed or to emergencies. A Work Change Directive will not change the Contract Price or the Contract Times but is evidence that the parties expect that the change ordered or documented by a Work Change Directive will be incorporated in a subsequently issued Change Order following negotiations by the parties as to its effect, if any, on the Contract Price or Contract Times.

1.02 *Terminology*

A. The words and terms discussed in Paragraph 1.02.B through F are not defined but, when used in the Bidding Requirements or Contract Documents, have the indicated meaning.

B. *Intent of Certain Terms or Adjectives:*

1. The Contract Documents include the terms "as allowed," "as approved," "as ordered," "as directed" or terms of like effect or import to authorize an exercise of professional judgment by Engineer. In addition, the adjectives "reasonable," "suitable," "acceptable," "proper," "satisfactory," or adjectives of like effect or import are used to describe an action or determination of Engineer as to the Work. It is intended that such exercise of professional judgment, action, or determination will be solely to evaluate, in general, the Work for compliance with the information in the Contract Documents and with the design concept of the Project as a functioning whole as shown or indicated in the Contract Documents (unless there is a specific statement indicating otherwise). The use of any such term or adjective is not intended to and shall not be effective to assign to Engineer any duty or authority to supervise or direct the performance of the Work, or any duty or authority to undertake responsibility contrary to the provisions of Paragraph 9.09 or any other provision of the Contract Documents.

C. *Day:*

1. The word "day" means a calendar day of 24 hours measured from midnight to the next midnight.

D. *Defective:*

1. The word "defective," when modifying the word "Work," refers to Work that is unsatisfactory, faulty, or deficient in that it:

a. does not conform to the Contract Documents; or

b. does not meet the requirements of any applicable inspection, reference standard, test, or approval referred to in the Contract Documents; or

Copyright © 2007 National Society of Professional Engineers for EJCDC. All rights reserved.

~~c.~~ has been damaged prior to Engineer's recommendation of final payment (unless responsibility for the protection thereof has been assumed by Owner at Substantial Completion in accordance with Paragraph 14.04 or 14.05).

E. *Furnish, Install, Perform, Provide:*

1. The word "furnish," when used in connection with services, materials, or equipment, shall mean to supply and deliver said services, materials, or equipment to the Site (or some other specified location) ready for use or installation and in usable or operable condition.

2. The word "install," when used in connection with services, materials, or equipment, shall mean to put into use or place in final position said services, materials, or equipment complete and ready for intended use.

3. The words "perform" or "provide," when used in connection with services, materials, or equipment, shall mean to furnish and install said services, materials, or equipment complete and ready for intended use.

4. When "furnish," "install," "perform," or "provide" is not used in connection with services, materials, or equipment in a context clearly requiring an obligation of Contractor, "provide" is implied.

F. Unless stated otherwise in the Contract Documents, words or phrases that have a well-known technical or construction industry or trade meaning are used in the Contract Documents in accordance with such recognized meaning.

ARTICLE 2 – PRELIMINARY MATTERS

~~2.01 *Delivery of Bonds and Evidence of Insurance*~~

A. ~~When Contractor delivers the executed counterparts of the Agreement to Owner, Contractor shall also deliver to Owner such bonds as Contractor may be required to furnish.~~

B. ~~*Evidence of Insurance:* Before any Work at the Site is started, Contractor and Owner shall each deliver to the other, with copies to each additional insured identified in the Supplementary Conditions, certificates of insurance (and other evidence of insurance which either of them or any additional insured may reasonably request) which Contractor and Owner respectively are required to purchase and maintain in accordance with Article 5.~~

~~2.02 *Copies of Documents*~~

A. ~~Owner shall furnish to Contractor up to ten printed or hard copies of the Drawings and Project Manual. Additional copies will be furnished upon request at the cost of reproduction.~~

2.03 *Commencement of Contract Times; Notice to Proceed*

A. The Contract Times will commence to run on the thirtieth day after the Effective Date of the Agreement or, if a Notice to Proceed is given, on the day indicated in the Notice to Proceed. A Notice to Proceed may be given at any time within 30 days after the Effective Date of the

Copyright © 2007 National Society of Professional Engineers for EJCDC. All rights reserved.

Agreement. In no event will the Contract Times commence to run later than the sixtieth day after the day of Bid opening or the thirtieth day after the Effective Date of the Agreement, whichever date is earlier.

2.04 *Starting the Work*

A. Contractor shall start to perform the Work on the date when the Contract Times commence to run. No Work shall be done at the Site prior to the date on which the Contract Times commence to run.

2.05 *Before Starting Construction*

A. *Preliminary Schedules:* Within 10 days after the Effective Date of the Agreement (unless otherwise specified in the General Requirements), Contractor shall submit to Engineer for timely review:

1. a preliminary Progress Schedule indicating the times (numbers of days or dates) for starting and completing the various stages of the Work, including any Milestones specified in the Contract Documents;

2. a preliminary Schedule of Submittals; and

3. a preliminary Schedule of Values for all of the Work which includes quantities and prices of items which when added together equal the Contract Price and subdivides the Work into component parts in sufficient detail to serve as the basis for progress payments during performance of the Work. Such prices will include an appropriate amount of overhead and profit applicable to each item of Work.

2.06 *Preconstruction Conference; Designation of Authorized Representatives*

A. Before any Work at the Site is started, a conference attended by Owner, Contractor, Engineer, and others as appropriate will be held to establish a working understanding among the parties as to the Work and to discuss the schedules referred to in Paragraph 2.05.A, procedures for handling Shop Drawings and other submittals, processing Applications for Payment, and maintaining required records.

B. At this conference Owner and Contractor each shall designate, in writing, a specific individual to act as its authorized representative with respect to the services and responsibilities under the Contract. Such individuals shall have the authority to transmit instructions, receive information, render decisions relative to the Contract, and otherwise act on behalf of each respective party.

2.07 *Initial Acceptance of Schedules*

A. At least 10 days before submission of the first Application for Payment a conference attended by Contractor, Engineer, and others as appropriate will be held to review for acceptability to Engineer as provided below the schedules submitted in accordance with Paragraph 2.05.A. Contractor shall have an additional 10 days to make corrections and adjustments and to

Copyright © 2007 National Society of Professional Engineers for EJCDC. All rights reserved.

complete and resubmit the schedules. No progress payment shall be made to Contractor until acceptable schedules are submitted to Engineer.

1. The Progress Schedule will be acceptable to Engineer if it provides an orderly progression of the Work to completion within the Contract Times. Such acceptance will not impose on Engineer responsibility for the Progress Schedule, for sequencing, scheduling, or progress of the Work, nor interfere with or relieve Contractor from Contractor's full responsibility therefor.

2. Contractor's Schedule of Submittals will be acceptable to Engineer if it provides a workable arrangement for reviewing and processing the required submittals.

3. Contractor's Schedule of Values will be acceptable to Engineer as to form and substance if it provides a reasonable allocation of the Contract Price to component parts of the Work.

ARTICLE 3 – CONTRACT DOCUMENTS: INTENT, AMENDING, REUSE

3.01 *Intent*

A. The Contract Documents are complementary; what is required by one is as binding as if required by all.

B. It is the intent of the Contract Documents to describe a functionally complete project (or part thereof) to be constructed in accordance with the Contract Documents. Any labor, documentation, services, materials, or equipment that reasonably may be inferred from the Contract Documents or from prevailing custom or trade usage as being required to produce the indicated result will be provided whether or not specifically called for, at no additional cost to Owner.

C. Clarifications and interpretations of the Contract Documents shall be issued by Engineer as provided in Article 9.

3.02 *Reference Standards*

A. Standards, Specifications, Codes, Laws, and Regulations

1. Reference to standards, specifications, manuals, or codes of any technical society, organization, or association, or to Laws or Regulations, whether such reference be specific or by implication, shall mean the standard, specification, manual, code, or Laws or Regulations in effect at the time of opening of Bids (or on the Effective Date of the Agreement if there were no Bids), except as may be otherwise specifically stated in the Contract Documents.

2. No provision of any such standard, specification, manual, or code, or any instruction of a Supplier, shall be effective to change the duties or responsibilities of Owner, Contractor, or Engineer, or any of their subcontractors, consultants, agents, or employees, from those set forth in the Contract Documents. No such provision or instruction shall be effective to assign to Owner, Engineer, or any of their officers, directors, members, partners,

Copyright © 2007 National Society of Professional Engineers for EJCDC. All rights reserved.

employees, agents, consultants, or subcontractors, any duty or authority to supervise or direct the performance of the Work or any duty or authority to undertake responsibility inconsistent with the provisions of the Contract Documents.

3.03 *Reporting and Resolving Discrepancies*

A. *Reporting Discrepancies:*

1. *Contractor's Review of Contract Documents Before Starting Work*: Before undertaking each part of the Work, Contractor shall carefully study and compare the Contract Documents and check and verify pertinent figures therein and all applicable field measurements. Contractor shall promptly report in writing to Engineer any conflict, error, ambiguity, or discrepancy which Contractor discovers, or has actual knowledge of, and shall obtain a written interpretation or clarification from Engineer before proceeding with any Work affected thereby.

2. *Contractor's Review of Contract Documents During Performance of Work*: If, during the performance of the Work, Contractor discovers any conflict, error, ambiguity, or discrepancy within the Contract Documents, or between the Contract Documents and (a) any applicable Law or Regulation , (b) any standard, specification, manual, or code, or (c) any instruction of any Supplier, then Contractor shall promptly report it to Engineer in writing. Contractor shall not proceed with the Work affected thereby (except in an emergency as required by Paragraph 6.16.A) until an amendment or supplement to the Contract Documents has been issued by one of the methods indicated in Paragraph 3.04.

3. Contractor shall not be liable to Owner or Engineer for failure to report any conflict, error, ambiguity, or discrepancy in the Contract Documents unless Contractor had actual knowledge thereof.

B. *Resolving Discrepancies:*

1. Except as may be otherwise specifically stated in the Contract Documents, the provisions of the Contract Documents shall take precedence in resolving any conflict, error, ambiguity, or discrepancy between the provisions of the Contract Documents and:

   a. the provisions of any standard, specification, manual, or code, or the instruction of any Supplier (whether or not specifically incorporated by reference in the Contract Documents); or

   b. the provisions of any Laws or Regulations applicable to the performance of the Work (unless such an interpretation of the provisions of the Contract Documents would result in violation of such Law or Regulation).

3.04 *Amending and Supplementing Contract Documents*

A. The Contract Documents may be amended to provide for additions, deletions, and revisions in the Work or to modify the terms and conditions thereof by either a Change Order or a Work Change Directive.

Copyright © 2007 National Society of Professional Engineers for EJCDC. All rights reserved.

B. The requirements of the Contract Documents may be supplemented, and minor variations and deviations in the Work may be authorized, by one or more of the following ways:

1. A Field Order;

2. Engineer's approval of a Shop Drawing or Sample (subject to the provisions of Paragraph 6.17.D.3); or

3. Engineer's written interpretation or clarification.

3.05 *Reuse of Documents*

A. Contractor and any Subcontractor or Supplier shall not:

1. have or acquire any title to or ownership rights in any of the Drawings, Specifications, or other documents (or copies of any thereof) prepared by or bearing the seal of Engineer or its consultants, including electronic media editions; or

2. reuse any such Drawings, Specifications, other documents, or copies thereof on extensions of the Project or any other project without written consent of Owner and Engineer and specific written verification or adaptation by Engineer.

B. The prohibitions of this Paragraph 3.05 will survive final payment, or termination of the Contract. Nothing herein shall preclude Contractor from retaining copies of the Contract Documents for record purposes.

3.06 *Electronic Data*

A. Unless otherwise stated in the Supplementary Conditions, the data furnished by Owner or Engineer to Contractor, or by Contractor to Owner or Engineer, that may be relied upon are limited to the printed copies (also known as hard copies). Files in electronic media format of text, data, graphics, or other types are furnished only for the convenience of the receiving party. Any conclusion or information obtained or derived from such electronic files will be at the user's sole risk. If there is a discrepancy between the electronic files and the hard copies, the hard copies govern.

B. Because data stored in electronic media format can deteriorate or be modified inadvertently or otherwise without authorization of the data's creator, the party receiving electronic files agrees that it will perform acceptance tests or procedures within 60 days, after which the receiving party shall be deemed to have accepted the data thus transferred. Any errors detected within the 60-day acceptance period will be corrected by the transferring party.

C. When transferring documents in electronic media format, the transferring party makes no representations as to long term compatibility, usability, or readability of documents resulting from the use of software application packages, operating systems, or computer hardware differing from those used by the data's creator.

Copyright © 2007 National Society of Professional Engineers for EJCDC. All rights reserved.

ARTICLE 4 – AVAILABILITY OF LANDS; SUBSURFACE AND PHYSICAL CONDITIONS; HAZARDOUS ENVIRONMENTAL CONDITIONS; REFERENCE POINTS

4.01 *Availability of Lands*

A. Owner shall furnish the Site. Owner shall notify Contractor of any encumbrances or restrictions not of general application but specifically related to use of the Site with which Contractor must comply in performing the Work. Owner will obtain in a timely manner and pay for easements for permanent structures or permanent changes in existing facilities. If Contractor and Owner are unable to agree on entitlement to or on the amount or extent, if any, of any adjustment in the Contract Price or Contract Times, or both, as a result of any delay in Owner's furnishing the Site or a part thereof, Contractor may make a Claim therefor as provided in Paragraph 10.05.

B. Upon reasonable written request, Owner shall furnish Contractor with a current statement of record legal title and legal description of the lands upon which the Work is to be performed and Owner's interest therein as necessary for giving notice of or filing a mechanic's or construction lien against such lands in accordance with applicable Laws and Regulations.

C. Contractor shall provide for all additional lands and access thereto that may be required for temporary construction facilities or storage of materials and equipment.

4.02 *Subsurface and Physical Conditions*

A. *Reports and Drawings:* The Supplementary Conditions identify:

1. those reports known to Owner of explorations and tests of subsurface conditions at or contiguous to the Site; and

2. those drawings known to Owner of physical conditions relating to existing surface or subsurface structures at the Site (except Underground Facilities).

B. *Limited Reliance by Contractor on Technical Data Authorized:* Contractor may rely upon the accuracy of the "technical data" contained in such reports and drawings, but such reports and drawings are not Contract Documents. Such "technical data" is identified in the Supplementary Conditions. Except for such reliance on such "technical data," Contractor may not rely upon or make any claim against Owner or Engineer, or any of their officers, directors, members, partners, employees, agents, consultants, or subcontractors with respect to:

1. the completeness of such reports and drawings for Contractor's purposes, including, but not limited to, any aspects of the means, methods, techniques, sequences, and procedures of construction to be employed by Contractor, and safety precautions and programs incident thereto; or

2. other data, interpretations, opinions, and information contained in such reports or shown or indicated in such drawings; or

Copyright © 2007 National Society of Professional Engineers for EJCDC. All rights reserved.

3. any Contractor interpretation of or conclusion drawn from any "technical data" or any such other data, interpretations, opinions, or information.

4.03 *Differing Subsurface or Physical Conditions*

A. *Notice:* If Contractor believes that any subsurface or physical condition that is uncovered or revealed either:

1. is of such a nature as to establish that any "technical data" on which Contractor is entitled to rely as provided in Paragraph 4.02 is materially inaccurate; or

2. is of such a nature as to require a change in the Contract Documents; or

3. differs materially from that shown or indicated in the Contract Documents; or

4. is of an unusual nature, and differs materially from conditions ordinarily encountered and generally recognized as inherent in work of the character provided for in the Contract Documents;

then Contractor shall, promptly after becoming aware thereof and before further disturbing the subsurface or physical conditions or performing any Work in connection therewith (except in an emergency as required by Paragraph 6.16.A), notify Owner and Engineer in writing about such condition. Contractor shall not further disturb such condition or perform any Work in connection therewith (except as aforesaid) until receipt of written order to do so.

B. *Engineer's Review*: After receipt of written notice as required by Paragraph 4.03.A, Engineer will promptly review the pertinent condition, determine the necessity of Owner's obtaining additional exploration or tests with respect thereto, and advise Owner in writing (with a copy to Contractor) of Engineer's findings and conclusions.

C. *Possible Price and Times Adjustments:*

1. The Contract Price or the Contract Times, or both, will be equitably adjusted to the extent that the existence of such differing subsurface or physical condition causes an increase or decrease in Contractor's cost of, or time required for, performance of the Work; subject, however, to the following:

   a. such condition must meet any one or more of the categories described in Paragraph 4.03.A; and

   b. with respect to Work that is paid for on a unit price basis, any adjustment in Contract Price will be subject to the provisions of Paragraphs 9.07 and 11.03.

2. Contractor shall not be entitled to any adjustment in the Contract Price or Contract Times if:

   a. Contractor knew of the existence of such conditions at the time Contractor made a final commitment to Owner with respect to Contract Price and Contract Times by the submission of a Bid or becoming bound under a negotiated contract; or

Copyright © 2007 National Society of Professional Engineers for EJCDC. All rights reserved.

b. the existence of such condition could reasonably have been discovered or revealed as a result of any examination, investigation, exploration, test, or study of the Site and contiguous areas required by the Bidding Requirements or Contract Documents to be conducted by or for Contractor prior to Contractor's making such final commitment; or

c. Contractor failed to give the written notice as required by Paragraph 4.03.A.

3. If Owner and Contractor are unable to agree on entitlement to or on the amount or extent, if any, of any adjustment in the Contract Price or Contract Times, or both, a Claim may be made therefor as provided in Paragraph 10.05. However, neither Owner or Engineer, or any of their officers, directors, members, partners, employees, agents, consultants, or subcontractors shall be liable to Contractor for any claims, costs, losses, or damages (including but not limited to all fees and charges of engineers, architects, attorneys, and other professionals and all court or arbitration or other dispute resolution costs) sustained by Contractor on or in connection with any other project or anticipated project.

4.04 *Underground Facilities*

A. *Shown or Indicated:* The information and data shown or indicated in the Contract Documents with respect to existing Underground Facilities at or contiguous to the Site is based on information and data furnished to Owner or Engineer by the owners of such Underground Facilities, including Owner, or by others. Unless it is otherwise expressly provided in the Supplementary Conditions:

1. Owner and Engineer shall not be responsible for the accuracy or completeness of any such information or data provided by others; and

2. the cost of all of the following will be included in the Contract Price, and Contractor shall have full responsibility for:

a. reviewing and checking all such information and data;

b. locating all Underground Facilities shown or indicated in the Contract Documents;

c. coordination of the Work with the owners of such Underground Facilities, including Owner, during construction; and

d. the safety and protection of all such Underground Facilities and repairing any damage thereto resulting from the Work.

B. *Not Shown or Indicated:*

1. If an Underground Facility is uncovered or revealed at or contiguous to the Site which was not shown or indicated, or not shown or indicated with reasonable accuracy in the Contract Documents, Contractor shall, promptly after becoming aware thereof and before further disturbing conditions affected thereby or performing any Work in connection therewith (except in an emergency as required by Paragraph 6.16.A), identify the owner of such Underground Facility and give written notice to that owner and to Owner and Engineer.

Copyright © 2007 National Society of Professional Engineers for EJCDC. All rights reserved.

Engineer will promptly review the Underground Facility and determine the extent, if any, to which a change is required in the Contract Documents to reflect and document the consequences of the existence or location of the Underground Facility. During such time, Contractor shall be responsible for the safety and protection of such Underground Facility.

2. If Engineer concludes that a change in the Contract Documents is required, a Work Change Directive or a Change Order will be issued to reflect and document such consequences. An equitable adjustment shall be made in the Contract Price or Contract Times, or both, to the extent that they are attributable to the existence or location of any Underground Facility that was not shown or indicated or not shown or indicated with reasonable accuracy in the Contract Documents and that Contractor did not know of and could not reasonably have been expected to be aware of or to have anticipated. If Owner and Contractor are unable to agree on entitlement to or on the amount or extent, if any, of any such adjustment in Contract Price or Contract Times, Owner or Contractor may make a Claim therefor as provided in Paragraph 10.05.

4.05 *Reference Points*

A. Owner shall provide engineering surveys to establish reference points for construction which in Engineer's judgment are necessary to enable Contractor to proceed with the Work. Contractor shall be responsible for laying out the Work, shall protect and preserve the established reference points and property monuments, and shall make no changes or relocations without the prior written approval of Owner. Contractor shall report to Engineer whenever any reference point or property monument is lost or destroyed or requires relocation because of necessary changes in grades or locations, and shall be responsible for the accurate replacement or relocation of such reference points or property monuments by professionally qualified personnel.

4.06 *Hazardous Environmental Condition at Site*

A. *Reports and Drawings:* The Supplementary Conditions identify those reports and drawings known to Owner relating to Hazardous Environmental Conditions that have been identified at the Site.

B. *Limited Reliance by Contractor on Technical Data Authorized:* Contractor may rely upon the accuracy of the "technical data" contained in such reports and drawings, but such reports and drawings are not Contract Documents. Such "technical data" is identified in the Supplementary Conditions. Except for such reliance on such "technical data," Contractor may not rely upon or make any claim against Owner or Engineer, or any of their officers, directors, members, partners, employees, agents, consultants, or subcontractors with respect to:

1. the completeness of such reports and drawings for Contractor's purposes, including, but not limited to, any aspects of the means, methods, techniques, sequences and procedures of construction to be employed by Contractor and safety precautions and programs incident thereto; or

2. other data, interpretations, opinions and information contained in such reports or shown or indicated in such drawings; or

Copyright © 2007 National Society of Professional Engineers for EJCDC. All rights reserved.

3. any Contractor interpretation of or conclusion drawn from any "technical data" or any such other data, interpretations, opinions or information.

C. Contractor shall not be responsible for any Hazardous Environmental Condition uncovered or revealed at the Site which was not shown or indicated in Drawings or Specifications or identified in the Contract Documents to be within the scope of the Work. Contractor shall be responsible for a Hazardous Environmental Condition created with any materials brought to the Site by Contractor, Subcontractors, Suppliers, or anyone else for whom Contractor is responsible.

D. If Contractor encounters a Hazardous Environmental Condition or if Contractor or anyone for whom Contractor is responsible creates a Hazardous Environmental Condition, Contractor shall immediately: (i) secure or otherwise isolate such condition; (ii) stop all Work in connection with such condition and in any area affected thereby (except in an emergency as required by Paragraph 6.16.A); and (iii) notify Owner and Engineer (and promptly thereafter confirm such notice in writing). Owner shall promptly consult with Engineer concerning the necessity for Owner to retain a qualified expert to evaluate such condition or take corrective action, if any. Promptly after consulting with Engineer, Owner shall take such actions as are necessary to permit Owner to timely obtain required permits and provide Contractor the written notice required by Paragraph 4.06.E.

E. Contractor shall not be required to resume Work in connection with such condition or in any affected area until after Owner has obtained any required permits related thereto and delivered written notice to Contractor: (i) specifying that such condition and any affected area is or has been rendered safe for the resumption of Work; or (ii) specifying any special conditions under which such Work may be resumed safely. If Owner and Contractor cannot agree as to entitlement to or on the amount or extent, if any, of any adjustment in Contract Price or Contract Times, or both, as a result of such Work stoppage or such special conditions under which Work is agreed to be resumed by Contractor, either party may make a Claim therefor as provided in Paragraph 10.05.

F. If after receipt of such written notice Contractor does not agree to resume such Work based on a reasonable belief it is unsafe, or does not agree to resume such Work under such special conditions, then Owner may order the portion of the Work that is in the area affected by such condition to be deleted from the Work. If Owner and Contractor cannot agree as to entitlement to or on the amount or extent, if any, of an adjustment in Contract Price or Contract Times as a result of deleting such portion of the Work, then either party may make a Claim therefor as provided in Paragraph 10.05. Owner may have such deleted portion of the Work performed by Owner's own forces or others in accordance with Article 7.

G. To the fullest extent permitted by Laws and Regulations, Owner shall indemnify and hold harmless Contractor, Subcontractors, and Engineer, and the officers, directors, members, partners, employees, agents, consultants, and subcontractors of each and any of them from and against all claims, costs, losses, and damages (including but not limited to all fees and charges of engineers, architects, attorneys, and other professionals and all court or arbitration or other dispute resolution costs) arising out of or relating to a Hazardous Environmental Condition, provided that such Hazardous Environmental Condition: (i) was not shown or indicated in the

Copyright © 2007 National Society of Professional Engineers for EJCDC. All rights reserved.

Drawings or Specifications or identified in the Contract Documents to be included within the scope of the Work, and (ii) was not created by Contractor or by anyone for whom Contractor is responsible. Nothing in this Paragraph 4.06.G shall obligate Owner to indemnify any individual or entity from and against the consequences of that individual's or entity's own negligence.

H. To the fullest extent permitted by Laws and Regulations, Contractor shall indemnify and hold harmless Owner and Engineer, and the officers, directors, members, partners, employees, agents, consultants, and subcontractors of each and any of them from and against all claims, costs, losses, and damages (including but not limited to all fees and charges of engineers, architects, attorneys, and other professionals and all court or arbitration or other dispute resolution costs) arising out of or relating to a Hazardous Environmental Condition created by Contractor or by anyone for whom Contractor is responsible. Nothing in this Paragraph 4.06.H shall obligate Contractor to indemnify any individual or entity from and against the consequences of that individual's or entity's own negligence.

I. The provisions of Paragraphs 4.02, 4.03, and 4.04 do not apply to a Hazardous Environmental Condition uncovered or revealed at the Site.

~~ARTICLE 5 – BONDS AND INSURANCE~~

~~5.01 *Performance, Payment, and Other Bonds*~~

A. ~~Contractor shall furnish performance and payment bonds, each in an amount at least equal to the Contract Price as security for the faithful performance and payment of all of Contractor's obligations under the Contract Documents. These bonds shall remain in effect until one year after the date when final payment becomes due or until completion of the correction period specified in Paragraph 13.07, whichever is later, except as provided otherwise by Laws or Regulations or by the Contract Documents. Contractor shall also furnish such other bonds as are required by the Contract Documents.~~

B. ~~All bonds shall be in the form prescribed by the Contract Documents except as provided otherwise by Laws or Regulations, and shall be executed by such sureties as are named in the list of "Companies Holding Certificates of Authority as Acceptable Sureties on Federal Bonds and as Acceptable Reinsuring Companies" as published in Circular 570 (amended) by the Financial Management Service, Surety Bond Branch, U.S. Department of the Treasury. All bonds signed by an agent or attorney-in-fact must be accompanied by a certified copy of that individual's authority to bind the surety. The evidence of authority shall show that it is effective on the date the agent or attorney-in-fact signed each bond.~~

C. ~~If the surety on any bond furnished by Contractor is declared bankrupt or becomes insolvent or its right to do business is terminated in any state where any part of the Project is located or it ceases to meet the requirements of Paragraph 5.01.B, Contractor shall promptly notify Owner and Engineer and shall, within 20 days after the event giving rise to such notification, provide another bond and surety, both of which shall comply with the requirements of Paragraphs 5.01.B and 5.02.~~

Copyright © 2007 National Society of Professional Engineers for EJCDC. All rights reserved.

~~5.02 *Licensed Sureties and Insurers*~~

A. ~~All bonds and insurance required by the Contract Documents to be purchased and maintained by Owner or Contractor shall be obtained from surety or insurance companies that are duly licensed or authorized in the jurisdiction in which the Project is located to issue bonds or insurance policies for the limits and coverages so required. Such surety and insurance companies shall also meet such additional requirements and qualifications as may be provided in the Supplementary Conditions.~~

~~5.03 *Certificates of Insurance*~~

A. ~~Contractor shall deliver to Owner, with copies to each additional insured and loss payee identified in the Supplementary Conditions, certificates of insurance (and other evidence of insurance requested by Owner or any other additional insured) which Contractor is required to purchase and maintain.~~

B. ~~Owner shall deliver to Contractor, with copies to each additional insured and loss payee identified in the Supplementary Conditions, certificates of insurance (and other evidence of insurance requested by Contractor or any other additional insured) which Owner is required to purchase and maintain.~~

C. ~~Failure of Owner to demand such certificates or other evidence of Contractor's full compliance with these insurance requirements or failure of Owner to identify a deficiency in compliance from the evidence provided shall not be construed as a waiver of Contractor's obligation to maintain such insurance.~~

D. ~~Owner does not represent that insurance coverage and limits established in this Contract necessarily will be adequate to protect Contractor.~~

E. ~~The insurance and insurance limits required herein shall not be deemed as a limitation on Contractor's liability under the indemnities granted to Owner in the Contract Documents.~~

~~5.04 *Contractor's Insurance*~~

A. ~~Contractor shall purchase and maintain such insurance as is appropriate for the Work being performed and as will provide protection from claims set forth below which may arise out of or result from Contractor's performance of the Work and Contractor's other obligations under the Contract Documents, whether it is to be performed by Contractor, any Subcontractor or Supplier, or by anyone directly or indirectly employed by any of them to perform any of the Work, or by anyone for whose acts any of them may be liable:~~

1. ~~claims under workers' compensation, disability benefits, and other similar employee benefit acts;~~

2. ~~claims for damages because of bodily injury, occupational sickness or disease, or death of Contractor's employees;~~

Copyright © 2007 National Society of Professional Engineers for EJCDC. All rights reserved.

3. ~~claims for damages because of bodily injury, sickness or disease, or death of any person other than Contractor's employees;~~

4. ~~claims for damages insured by reasonably available personal injury liability coverage which are sustained:~~

   a. ~~by any person as a result of an offense directly or indirectly related to the employment of such person by Contractor, or~~

   b. ~~by any other person for any other reason;~~

5. ~~claims for damages, other than to the Work itself, because of injury to or destruction of tangible property wherever located, including loss of use resulting therefrom; and~~

6. ~~claims for damages because of bodily injury or death of any person or property damage arising out of the ownership, maintenance or use of any motor vehicle.~~

B. ~~The policies of insurance required by this Paragraph 5.04 shall:~~

1. ~~with respect to insurance required by Paragraphs 5.04.A.3 through 5.04.A.6 inclusive, be written on an occurrence basis, include as additional insureds (subject to any customary exclusion regarding professional liability) Owner and Engineer, and any other individuals or entities identified in the Supplementary Conditions, all of whom shall be listed as additional insureds, and include coverage for the respective officers, directors, members, partners, employees, agents, consultants, and subcontractors of each and any of all such additional insureds, and the insurance afforded to these additional insureds shall provide primary coverage for all claims covered thereby;~~

2. ~~include at least the specific coverages and be written for not less than the limits of liability provided in the Supplementary Conditions or required by Laws or Regulations, whichever is greater;~~

3. ~~include contractual liability insurance covering Contractor's indemnity obligations under Paragraphs 6.11 and 6.20;~~

4. ~~contain a provision or endorsement that the coverage afforded will not be canceled, materially changed or renewal refused until at least 30 days prior written notice has been given to Owner and Contractor and to each other additional insured identified in the Supplementary Conditions to whom a certificate of insurance has been issued (and the certificates of insurance furnished by the Contractor pursuant to Paragraph 5.03 will so provide);~~

5. ~~remain in effect at least until final payment and at all times thereafter when Contractor may be correcting, removing, or replacing defective Work in accordance with Paragraph 13.07; and~~

Copyright © 2007 National Society of Professional Engineers for EJCDC. All rights reserved.

~~6. include completed operations coverage:~~

~~a. Such insurance shall remain in effect for two years after final payment.~~

~~b. Contractor shall furnish Owner and each other additional insured identified in the Supplementary Conditions, to whom a certificate of insurance has been issued, evidence satisfactory to Owner and any such additional insured of continuation of such insurance at final payment and one year thereafter.~~

~~5.05 *Owner's Liability Insurance*~~

A. ~~In addition to the insurance required to be provided by Contractor under Paragraph 5.04, Owner, at Owner's option, may purchase and maintain at Owner's expense Owner's own liability insurance as will protect Owner against claims which may arise from operations under the Contract Documents.~~

~~5.06 *Property Insurance*~~

A. ~~Unless otherwise provided in the Supplementary Conditions, Owner shall purchase and maintain property insurance upon the Work at the Site in the amount of the full replacement cost thereof (subject to such deductible amounts as may be provided in the Supplementary Conditions or required by Laws and Regulations). This insurance shall:~~

~~1. include the interests of Owner, Contractor, Subcontractors, and Engineer, and any other individuals or entities identified in the Supplementary Conditions, and the officers, directors, members, partners, employees, agents, consultants, and subcontractors of each and any of them, each of whom is deemed to have an insurable interest and shall be listed as a loss payee;~~

~~2. be written on a Builder's Risk "all-risk" policy form that shall at least include insurance for physical loss or damage to the Work, temporary buildings, falsework, and materials and equipment in transit, and shall insure against at least the following perils or causes of loss: fire, lightning, extended coverage, theft, vandalism and malicious mischief, earthquake, collapse, debris removal, demolition occasioned by enforcement of Laws and Regulations, water damage (other than that caused by flood), and such other perils or causes of loss as may be specifically required by the Supplementary Conditions.~~

~~3. include expenses incurred in the repair or replacement of any insured property (including but not limited to fees and charges of engineers and architects);~~

~~4. cover materials and equipment stored at the Site or at another location that was agreed to in writing by Owner prior to being incorporated in the Work, provided that such materials and equipment have been included in an Application for Payment recommended by Engineer;~~

~~5. allow for partial utilization of the Work by Owner;~~

~~6. include testing and startup; and~~

Copyright © 2007 National Society of Professional Engineers for EJCDC. All rights reserved.

7. ~~be maintained in effect until final payment is made unless otherwise agreed to in writing by Owner, Contractor, and Engineer with 30 days written notice to each other loss payee to whom a certificate of insurance has been issued.~~

B. ~~Owner shall purchase and maintain such equipment breakdown insurance or additional property insurance as may be required by the Supplementary Conditions or Laws and Regulations which will include the interests of Owner, Contractor, Subcontractors, and Engineer, and any other individuals or entities identified in the Supplementary Conditions, and the officers, directors, members, partners, employees, agents, consultants and subcontractors of each and any of them, each of whom is deemed to have an insurable interest and shall be listed as a loss payee.~~

C. ~~All the policies of insurance (and the certificates or other evidence thereof) required to be purchased and maintained in accordance with this Paragraph 5.06 will contain a provision or endorsement that the coverage afforded will not be canceled or materially changed or renewal refused until at least 30 days prior written notice has been given to Owner and Contractor and to each other loss payee to whom a certificate of insurance has been issued and will contain waiver provisions in accordance with Paragraph 5.07.~~

D. ~~Owner shall not be responsible for purchasing and maintaining any property insurance specified in this Paragraph 5.06 to protect the interests of Contractor, Subcontractors, or others in the Work to the extent of any deductible amounts that are identified in the Supplementary Conditions. The risk of loss within such identified deductible amount will be borne by Contractor, Subcontractors, or others suffering any such loss, and if any of them wishes property insurance coverage within the limits of such amounts, each may purchase and maintain it at the purchaser's own expense.~~

E. ~~If Contractor requests in writing that other special insurance be included in the property insurance policies provided under this Paragraph 5.06, Owner shall, if possible, include such insurance, and the cost thereof will be charged to Contractor by appropriate Change Order. Prior to commencement of the Work at the Site, Owner shall in writing advise Contractor whether or not such other insurance has been procured by Owner.~~

~~5.07 *Waiver of Rights*~~

A. ~~Owner and Contractor intend that all policies purchased in accordance with Paragraph 5.06 will protect Owner, Contractor, Subcontractors, and Engineer, and all other individuals or entities identified in the Supplementary Conditions as loss payees (and the officers, directors, members, partners, employees, agents, consultants, and subcontractors of each and any of them) in such policies and will provide primary coverage for all losses and damages caused by the perils or causes of loss covered thereby. All such policies shall contain provisions to the effect that in the event of payment of any loss or damage the insurers will have no rights of recovery against any of the insureds or loss payees thereunder. Owner and Contractor waive all rights against each other and their respective officers, directors, members, partners, employees, agents, consultants and subcontractors of each and any of them for all losses and damages caused by, arising out of or resulting from any of the perils or causes of loss covered by such policies and any other property insurance applicable to the Work; and, in addition, waive all such rights against Subcontractors and Engineer, and all other individuals or entities identified in the~~

Copyright © 2007 National Society of Professional Engineers for EJCDC. All rights reserved.

~~Supplementary Conditions as loss payees (and the officers, directors, members, partners, employees, agents, consultants, and subcontractors of each and any of them) under such policies for losses and damages so caused. None of the above waivers shall extend to the rights that any party making such waiver may have to the proceeds of insurance held by Owner as trustee or otherwise payable under any policy so issued.~~

B. ~~Owner waives all rights against Contractor, Subcontractors, and Engineer, and the officers, directors, members, partners, employees, agents, consultants and subcontractors of each and any of them for:~~

1. ~~loss due to business interruption, loss of use, or other consequential loss extending beyond direct physical loss or damage to Owner's property or the Work caused by, arising out of, or resulting from fire or other perils whether or not insured by Owner; and~~

2. ~~loss or damage to the completed Project or part thereof caused by, arising out of, or resulting from fire or other insured peril or cause of loss covered by any property insurance maintained on the completed Project or part thereof by Owner during partial utilization pursuant to Paragraph 14.05, after Substantial Completion pursuant to Paragraph 14.04, or after final payment pursuant to Paragraph 14.07.~~

C. ~~Any insurance policy maintained by Owner covering any loss, damage or consequential loss referred to in Paragraph 5.07.B shall contain provisions to the effect that in the event of payment of any such loss, damage, or consequential loss, the insurers will have no rights of recovery against Contractor, Subcontractors, or Engineer, and the officers, directors, members, partners, employees, agents, consultants and subcontractors of each and any of them.~~

~~5.08 *Receipt and Application of Insurance Proceeds*~~

A. ~~Any insured loss under the policies of insurance required by Paragraph 5.06 will be adjusted with Owner and made payable to Owner as fiduciary for the loss payees, as their interests may appear, subject to the requirements of any applicable mortgage clause and of Paragraph 5.08.B. Owner shall deposit in a separate account any money so received and shall distribute it in accordance with such agreement as the parties in interest may reach. If no other special agreement is reached, the damaged Work shall be repaired or replaced, the moneys so received applied on account thereof, and the Work and the cost thereof covered by an appropriate Change Order.~~

B. ~~Owner as fiduciary shall have power to adjust and settle any loss with the insurers unless one of the parties in interest shall object in writing within 15 days after the occurrence of loss to Owner's exercise of this power. If such objection be made, Owner as fiduciary shall make settlement with the insurers in accordance with such agreement as the parties in interest may reach. If no such agreement among the parties in interest is reached, Owner as fiduciary shall adjust and settle the loss with the insurers and, if required in writing by any party in interest, Owner as fiduciary shall give bond for the proper performance of such duties.~~

Copyright © 2007 National Society of Professional Engineers for EJCDC. All rights reserved.

~~5.09 *Acceptance of Bonds and Insurance; Option to Replace*~~

A. ~~If either Owner or Contractor has any objection to the coverage afforded by or other provisions of the bonds or insurance required to be purchased and maintained by the other party in accordance with Article 5 on the basis of non-conformance with the Contract Documents, the objecting party shall so notify the other party in writing within 10 days after receipt of the certificates (or other evidence requested) required by Paragraph 2.01.B. Owner and Contractor shall each provide to the other such additional information in respect of insurance provided as the other may reasonably request. If either party does not purchase or maintain all of the bonds and insurance required of such party by the Contract Documents, such party shall notify the other party in writing of such failure to purchase prior to the start of the Work, or of such failure to maintain prior to any change in the required coverage. Without prejudice to any other right or remedy, the other party may elect to obtain equivalent bonds or insurance to protect such other party's interests at the expense of the party who was required to provide such coverage, and a Change Order shall be issued to adjust the Contract Price accordingly.~~

~~5.10 *Partial Utilization, Acknowledgment of Property Insurer*~~

A. ~~If Owner finds it necessary to occupy or use a portion or portions of the Work prior to Substantial Completion of all the Work as provided in Paragraph 14.05, no such use or occupancy shall commence before the insurers providing the property insurance pursuant to Paragraph 5.06 have acknowledged notice thereof and in writing effected any changes in coverage necessitated thereby. The insurers providing the property insurance shall consent by endorsement on the policy or policies, but the property insurance shall not be canceled or permitted to lapse on account of any such partial use or occupancy.~~

ARTICLE 6 – CONTRACTOR'S RESPONSIBILITIES

6.01 *Supervision and Superintendence*

A. Contractor shall supervise, inspect, and direct the Work competently and efficiently, devoting such attention thereto and applying such skills and expertise as may be necessary to perform the Work in accordance with the Contract Documents. Contractor shall be solely responsible for the means, methods, techniques, sequences, and procedures of construction. Contractor shall not be responsible for the negligence of Owner or Engineer in the design or specification of a specific means, method, technique, sequence, or procedure of construction which is shown or indicated in and expressly required by the Contract Documents.

B. At all times during the progress of the Work, Contractor shall assign a competent resident superintendent who shall not be replaced without written notice to Owner and Engineer except under extraordinary circumstances.

6.02 *Labor; Working Hours*

A. Contractor shall provide competent, suitably qualified personnel to survey and lay out the Work and perform construction as required by the Contract Documents. Contractor shall at all times maintain good discipline and order at the Site.

Copyright © 2007 National Society of Professional Engineers for EJCDC. All rights reserved.

B. Except as otherwise required for the safety or protection of persons or the Work or property at the Site or adjacent thereto, and except as otherwise stated in the Contract Documents, all Work at the Site shall be performed during regular working hours. Contractor will not permit the performance of Work on a Saturday, Sunday, or any legal holiday without Owner's written consent (which will not be unreasonably withheld) given after prior written notice to Engineer.

6.03 *Services, Materials, and Equipment*

A. Unless otherwise specified in the Contract Documents, Contractor shall provide and assume full responsibility for all services, materials, equipment, labor, transportation, construction equipment and machinery, tools, appliances, fuel, power, light, heat, telephone, water, sanitary facilities, temporary facilities, and all other facilities and incidentals necessary for the performance, testing, start-up, and completion of the Work.

B. All materials and equipment incorporated into the Work shall be as specified or, if not specified, shall be of good quality and new, except as otherwise provided in the Contract Documents. All special warranties and guarantees required by the Specifications shall expressly run to the benefit of Owner. If required by Engineer, Contractor shall furnish satisfactory evidence (including reports of required tests) as to the source, kind, and quality of materials and equipment.

C. All materials and equipment shall be stored, applied, installed, connected, erected, protected, used, cleaned, and conditioned in accordance with instructions of the applicable Supplier, except as otherwise may be provided in the Contract Documents.

6.04 *Progress Schedule*

A. Contractor shall adhere to the Progress Schedule established in accordance with Paragraph 2.07 as it may be adjusted from time to time as provided below.

1. Contractor shall submit to Engineer for acceptance (to the extent indicated in Paragraph 2.07) proposed adjustments in the Progress Schedule that will not result in changing the Contract Times. Such adjustments will comply with any provisions of the General Requirements applicable thereto.

2. Proposed adjustments in the Progress Schedule that will change the Contract Times shall be submitted in accordance with the requirements of Article 12. Adjustments in Contract Times may only be made by a Change Order.

6.05 *Substitutes and "Or-Equals"*

A. Whenever an item of material or equipment is specified or described in the Contract Documents by using the name of a proprietary item or the name of a particular Supplier, the specification or description is intended to establish the type, function, appearance, and quality required. Unless the specification or description contains or is followed by words reading that no like, equivalent, or "or-equal" item or no substitution is permitted, other items of material or equipment or material or equipment of other Suppliers may be submitted to Engineer for review under the circumstances described below.

Copyright © 2007 National Society of Professional Engineers for EJCDC. All rights reserved.

1. *"Or-Equal" Items:* If in Engineer's sole discretion an item of material or equipment proposed by Contractor is functionally equal to that named and sufficiently similar so that no change in related Work will be required, it may be considered by Engineer as an "or-equal" item, in which case review and approval of the proposed item may, in Engineer's sole discretion, be accomplished without compliance with some or all of the requirements for approval of proposed substitute items. For the purposes of this Paragraph 6.05.A.1, a proposed item of material or equipment will be considered functionally equal to an item so named if:

    a. in the exercise of reasonable judgment Engineer determines that:

        1) it is at least equal in materials of construction, quality, durability, appearance, strength, and design characteristics;

        2) it will reliably perform at least equally well the function and achieve the results imposed by the design concept of the completed Project as a functioning whole; and

        3) it has a proven record of performance and availability of responsive service.

    b. Contractor certifies that, if approved and incorporated into the Work:

        1) there will be no increase in cost to the Owner or increase in Contract Times; and

        2) it will conform substantially to the detailed requirements of the item named in the Contract Documents.

2. *Substitute Items:*

    a. If in Engineer's sole discretion an item of material or equipment proposed by Contractor does not qualify as an "or-equal" item under Paragraph 6.05.A.1, it will be considered a proposed substitute item.

    b. Contractor shall submit sufficient information as provided below to allow Engineer to determine if the item of material or equipment proposed is essentially equivalent to that named and an acceptable substitute therefor. Requests for review of proposed substitute items of material or equipment will not be accepted by Engineer from anyone other than Contractor.

    c. The requirements for review by Engineer will be as set forth in Paragraph 6.05.A.2.d, as supplemented by the General Requirements, and as Engineer may decide is appropriate under the circumstances.

    d. Contractor shall make written application to Engineer for review of a proposed substitute item of material or equipment that Contractor seeks to furnish or use. The application:

        1) shall certify that the proposed substitute item will:

Copyright © 2007 National Society of Professional Engineers for EJCDC. All rights reserved.

a) perform adequately the functions and achieve the results called for by the general design,

b) be similar in substance to that specified, and

c) be suited to the same use as that specified;

2) will state:

a) the extent, if any, to which the use of the proposed substitute item will prejudice Contractor's achievement of Substantial Completion on time,

b) whether use of the proposed substitute item in the Work will require a change in any of the Contract Documents (or in the provisions of any other direct contract with Owner for other work on the Project) to adapt the design to the proposed substitute item, and

c) whether incorporation or use of the proposed substitute item in connection with the Work is subject to payment of any license fee or royalty;

3) will identify:

a) all variations of the proposed substitute item from that specified, and

b) available engineering, sales, maintenance, repair, and replacement services; and

4) shall contain an itemized estimate of all costs or credits that will result directly or indirectly from use of such substitute item, including costs of redesign and claims of other contractors affected by any resulting change.

B. *Substitute Construction Methods or Procedures:* If a specific means, method, technique, sequence, or procedure of construction is expressly required by the Contract Documents, Contractor may furnish or utilize a substitute means, method, technique, sequence, or procedure of construction approved by Engineer. Contractor shall submit sufficient information to allow Engineer, in Engineer's sole discretion, to determine that the substitute proposed is equivalent to that expressly called for by the Contract Documents. The requirements for review by Engineer will be similar to those provided in Paragraph 6.05.A.2.

C. *Engineer's Evaluation:* Engineer will be allowed a reasonable time within which to evaluate each proposal or submittal made pursuant to Paragraphs 6.05.A and 6.05.B. Engineer may require Contractor to furnish additional data about the proposed substitute item. Engineer will be the sole judge of acceptability. No "or equal" or substitute will be ordered, installed or utilized until Engineer's review is complete, which will be evidenced by a Change Order in the case of a substitute and an approved Shop Drawing for an "or equal." Engineer will advise Contractor in writing of any negative determination.

D. *Special Guarantee:* Owner may require Contractor to furnish at Contractor's expense a special performance guarantee or other surety with respect to any substitute.

Copyright © 2007 National Society of Professional Engineers for EJCDC. All rights reserved.

E. *Engineer's Cost Reimbursement*: Engineer will record Engineer's costs in evaluating a substitute proposed or submitted by Contractor pursuant to Paragraphs 6.05.A.2 and 6.05.B. Whether or not Engineer approves a substitute so proposed or submitted by Contractor, Contractor shall reimburse Owner for the reasonable charges of Engineer for evaluating each such proposed substitute. Contractor shall also reimburse Owner for the reasonable charges of Engineer for making changes in the Contract Documents (or in the provisions of any other direct contract with Owner) resulting from the acceptance of each proposed substitute.

F. *Contractor's Expense*: Contractor shall provide all data in support of any proposed substitute or "or-equal" at Contractor's expense.

6.06 *Concerning Subcontractors, Suppliers, and Others*

A. Contractor shall not employ any Subcontractor, Supplier, or other individual or entity (including those acceptable to Owner as indicated in Paragraph 6.06.B), whether initially or as a replacement, against whom Owner may have reasonable objection. Contractor shall not be required to employ any Subcontractor, Supplier, or other individual or entity to furnish or perform any of the Work against whom Contractor has reasonable objection.

B. If the Supplementary Conditions require the identity of certain Subcontractors, Suppliers, or other individuals or entities to be submitted to Owner in advance for acceptance by Owner by a specified date prior to the Effective Date of the Agreement, and if Contractor has submitted a list thereof in accordance with the Supplementary Conditions, Owner's acceptance (either in writing or by failing to make written objection thereto by the date indicated for acceptance or objection in the Bidding Documents or the Contract Documents) of any such Subcontractor, Supplier, or other individual or entity so identified may be revoked on the basis of reasonable objection after due investigation. Contractor shall submit an acceptable replacement for the rejected Subcontractor, Supplier, or other individual or entity, and the Contract Price will be adjusted by the difference in the cost occasioned by such replacement, and an appropriate Change Order will be issued. No acceptance by Owner of any such Subcontractor, Supplier, or other individual or entity, whether initially or as a replacement, shall constitute a waiver of any right of Owner or Engineer to reject defective Work.

C. Contractor shall be fully responsible to Owner and Engineer for all acts and omissions of the Subcontractors, Suppliers, and other individuals or entities performing or furnishing any of the Work just as Contractor is responsible for Contractor's own acts and omissions. Nothing in the Contract Documents:

1. shall create for the benefit of any such Subcontractor, Supplier, or other individual or entity any contractual relationship between Owner or Engineer and any such Subcontractor, Supplier or other individual or entity; nor

2. shall create any obligation on the part of Owner or Engineer to pay or to see to the payment of any moneys due any such Subcontractor, Supplier, or other individual or entity except as may otherwise be required by Laws and Regulations.

Copyright © 2007 National Society of Professional Engineers for EJCDC. All rights reserved.

D. Contractor shall be solely responsible for scheduling and coordinating the Work of Subcontractors, Suppliers, and other individuals or entities performing or furnishing any of the Work under a direct or indirect contract with Contractor.

E. Contractor shall require all Subcontractors, Suppliers, and such other individuals or entities performing or furnishing any of the Work to communicate with Engineer through Contractor.

F. The divisions and sections of the Specifications and the identifications of any Drawings shall not control Contractor in dividing the Work among Subcontractors or Suppliers or delineating the Work to be performed by any specific trade.

G. All Work performed for Contractor by a Subcontractor or Supplier will be pursuant to an appropriate agreement between Contractor and the Subcontractor or Supplier which specifically binds the Subcontractor or Supplier to the applicable terms and conditions of the Contract Documents for the benefit of Owner and Engineer. Whenever any such agreement is with a Subcontractor or Supplier who is listed as a loss payee on the property insurance provided in Paragraph 5.06, the agreement between the Contractor and the Subcontractor or Supplier will contain provisions whereby the Subcontractor or Supplier waives all rights against Owner, Contractor, Engineer, and all other individuals or entities identified in the Supplementary Conditions to be listed as insureds or loss payees (and the officers, directors, members, partners, employees, agents, consultants, and subcontractors of each and any of them) for all losses and damages caused by, arising out of, relating to, or resulting from any of the perils or causes of loss covered by such policies and any other property insurance applicable to the Work. If the insurers on any such policies require separate waiver forms to be signed by any Subcontractor or Supplier, Contractor will obtain the same.

6.07 *Patent Fees and Royalties*

A. Contractor shall pay all license fees and royalties and assume all costs incident to the use in the performance of the Work or the incorporation in the Work of any invention, design, process, product, or device which is the subject of patent rights or copyrights held by others. If a particular invention, design, process, product, or device is specified in the Contract Documents for use in the performance of the Work and if, to the actual knowledge of Owner or Engineer, its use is subject to patent rights or copyrights calling for the payment of any license fee or royalty to others, the existence of such rights shall be disclosed by Owner in the Contract Documents.

B. To the fullest extent permitted by Laws and Regulations, Owner shall indemnify and hold harmless Contractor, and its officers, directors, members, partners, employees, agents, consultants, and subcontractors from and against all claims, costs, losses, and damages (including but not limited to all fees and charges of engineers, architects, attorneys, and other professionals, and all court or arbitration or other dispute resolution costs) arising out of or relating to any infringement of patent rights or copyrights incident to the use in the performance of the Work or resulting from the incorporation in the Work of any invention, design, process, product, or device specified in the Contract Documents, but not identified as being subject to payment of any license fee or royalty to others required by patent rights or copyrights.

Copyright © 2007 National Society of Professional Engineers for EJCDC. All rights reserved.

C. To the fullest extent permitted by Laws and Regulations, Contractor shall indemnify and hold harmless Owner and Engineer, and the officers, directors, members, partners, employees, agents, consultants and subcontractors of each and any of them from and against all claims, costs, losses, and damages (including but not limited to all fees and charges of engineers, architects, attorneys, and other professionals and all court or arbitration or other dispute resolution costs) arising out of or relating to any infringement of patent rights or copyrights incident to the use in the performance of the Work or resulting from the incorporation in the Work of any invention, design, process, product, or device not specified in the Contract Documents.

6.08 *Permits*

A. Unless otherwise provided in the Supplementary Conditions, Contractor shall obtain and pay for all construction permits and licenses. Owner shall assist Contractor, when necessary, in obtaining such permits and licenses. Contractor shall pay all governmental charges and inspection fees necessary for the prosecution of the Work which are applicable at the time of opening of Bids, or, if there are no Bids, on the Effective Date of the Agreement. Owner shall pay all charges of utility owners for connections for providing permanent service to the Work.

6.09 *Laws and Regulations*

A. Contractor shall give all notices required by and shall comply with all Laws and Regulations applicable to the performance of the Work. Except where otherwise expressly required by applicable Laws and Regulations, neither Owner nor Engineer shall be responsible for monitoring Contractor's compliance with any Laws or Regulations.

B. If Contractor performs any Work knowing or having reason to know that it is contrary to Laws or Regulations, Contractor shall bear all claims, costs, losses, and damages (including but not limited to all fees and charges of engineers, architects, attorneys, and other professionals and all court or arbitration or other dispute resolution costs) arising out of or relating to such Work. However, it shall not be Contractor's responsibility to make certain that the Specifications and Drawings are in accordance with Laws and Regulations, but this shall not relieve Contractor of Contractor's obligations under Paragraph 3.03.

C. Changes in Laws or Regulations not known at the time of opening of Bids (or, on the Effective Date of the Agreement if there were no Bids) having an effect on the cost or time of performance of the Work shall be the subject of an adjustment in Contract Price or Contract Times. If Owner and Contractor are unable to agree on entitlement to or on the amount or extent, if any, of any such adjustment, a Claim may be made therefor as provided in Paragraph 10.05.

6.10 *Taxes*

A. Contractor shall pay all sales, consumer, use, and other similar taxes required to be paid by Contractor in accordance with the Laws and Regulations of the place of the Project which are applicable during the performance of the Work.

Copyright © 2007 National Society of Professional Engineers for EJCDC. All rights reserved.

6.11 *Use of Site and Other Areas*

A. *Limitation on Use of Site and Other Areas:*

1. Contractor shall confine construction equipment, the storage of materials and equipment, and the operations of workers to the Site and other areas permitted by Laws and Regulations, and shall not unreasonably encumber the Site and other areas with construction equipment or other materials or equipment. Contractor shall assume full responsibility for any damage to any such land or area, or to the owner or occupant thereof, or of any adjacent land or areas resulting from the performance of the Work.

2. Should any claim be made by any such owner or occupant because of the performance of the Work, Contractor shall promptly settle with such other party by negotiation or otherwise resolve the claim by arbitration or other dispute resolution proceeding or at law.

3. To the fullest extent permitted by Laws and Regulations, Contractor shall indemnify and hold harmless Owner and Engineer, and the officers, directors, members, partners, employees, agents, consultants and subcontractors of each and any of them from and against all claims, costs, losses, and damages (including but not limited to all fees and charges of engineers, architects, attorneys, and other professionals and all court or arbitration or other dispute resolution costs) arising out of or relating to any claim or action, legal or equitable, brought by any such owner or occupant against Owner, Engineer, or any other party indemnified hereunder to the extent caused by or based upon Contractor's performance of the Work.

B. *Removal of Debris During Performance of the Work:* During the progress of the Work Contractor shall keep the Site and other areas free from accumulations of waste materials, rubbish, and other debris. Removal and disposal of such waste materials, rubbish, and other debris shall conform to applicable Laws and Regulations.

C. *Cleaning:* Prior to Substantial Completion of the Work Contractor shall clean the Site and the Work and make it ready for utilization by Owner. At the completion of the Work Contractor shall remove from the Site all tools, appliances, construction equipment and machinery, and surplus materials and shall restore to original condition all property not designated for alteration by the Contract Documents.

D. *Loading Structures:* Contractor shall not load nor permit any part of any structure to be loaded in any manner that will endanger the structure, nor shall Contractor subject any part of the Work or adjacent property to stresses or pressures that will endanger it.

6.12 *Record Documents*

A. Contractor shall maintain in a safe place at the Site one record copy of all Drawings, Specifications, Addenda, Change Orders, Work Change Directives, Field Orders, and written interpretations and clarifications in good order and annotated to show changes made during construction. These record documents together with all approved Samples and a counterpart of all approved Shop Drawings will be available to Engineer for reference. Upon completion of the

Copyright © 2007 National Society of Professional Engineers for EJCDC. All rights reserved.

Work, these record documents, Samples, and Shop Drawings will be delivered to Engineer for Owner.

6.13 *Safety and Protection*

A. Contractor shall be solely responsible for initiating, maintaining and supervising all safety precautions and programs in connection with the Work. Such responsibility does not relieve Subcontractors of their responsibility for the safety of persons or property in the performance of their work, nor for compliance with applicable safety Laws and Regulations. Contractor shall take all necessary precautions for the safety of, and shall provide the necessary protection to prevent damage, injury or loss to:

1. all persons on the Site or who may be affected by the Work;

2. all the Work and materials and equipment to be incorporated therein, whether in storage on or off the Site; and

3. other property at the Site or adjacent thereto, including trees, shrubs, lawns, walks, pavements, roadways, structures, utilities, and Underground Facilities not designated for removal, relocation, or replacement in the course of construction.

B. Contractor shall comply with all applicable Laws and Regulations relating to the safety of persons or property, or to the protection of persons or property from damage, injury, or loss; and shall erect and maintain all necessary safeguards for such safety and protection. Contractor shall notify owners of adjacent property and of Underground Facilities and other utility owners when prosecution of the Work may affect them, and shall cooperate with them in the protection, removal, relocation, and replacement of their property.

C. Contractor shall comply with the applicable requirements of Owner's safety programs, if any. The Supplementary Conditions identify any Owner's safety programs that are applicable to the Work.

D. Contractor shall inform Owner and Engineer of the specific requirements of Contractor's safety program with which Owner's and Engineer's employees and representatives must comply while at the Site.

E. All damage, injury, or loss to any property referred to in Paragraph 6.13.A.2 or 6.13.A.3 caused, directly or indirectly, in whole or in part, by Contractor, any Subcontractor, Supplier, or any other individual or entity directly or indirectly employed by any of them to perform any of the Work, or anyone for whose acts any of them may be liable, shall be remedied by Contractor (except damage or loss attributable to the fault of Drawings or Specifications or to the acts or omissions of Owner or Engineer or anyone employed by any of them, or anyone for whose acts any of them may be liable, and not attributable, directly or indirectly, in whole or in part, to the fault or negligence of Contractor or any Subcontractor, Supplier, or other individual or entity directly or indirectly employed by any of them).

F. Contractor's duties and responsibilities for safety and for protection of the Work shall continue until such time as all the Work is completed and Engineer has issued a notice to Owner and

Copyright © 2007 National Society of Professional Engineers for EJCDC. All rights reserved.

Contractor in accordance with Paragraph 14.07.B that the Work is acceptable (except as otherwise expressly provided in connection with Substantial Completion).

6.14 *Safety Representative*

A. Contractor shall designate a qualified and experienced safety representative at the Site whose duties and responsibilities shall be the prevention of accidents and the maintaining and supervising of safety precautions and programs.

6.15 *Hazard Communication Programs*

A. Contractor shall be responsible for coordinating any exchange of material safety data sheets or other hazard communication information required to be made available to or exchanged between or among employers at the Site in accordance with Laws or Regulations.

6.16 *Emergencies*

A. In emergencies affecting the safety or protection of persons or the Work or property at the Site or adjacent thereto, Contractor is obligated to act to prevent threatened damage, injury, or loss. Contractor shall give Engineer prompt written notice if Contractor believes that any significant changes in the Work or variations from the Contract Documents have been caused thereby or are required as a result thereof. If Engineer determines that a change in the Contract Documents is required because of the action taken by Contractor in response to such an emergency, a Work Change Directive or Change Order will be issued.

6.17 *Shop Drawings and Samples*

A. Contractor shall submit Shop Drawings and Samples to Engineer for review and approval in accordance with the accepted Schedule of Submittals (as required by Paragraph 2.07). Each submittal will be identified as Engineer may require.

1. *Shop Drawings:*

a. Submit number of copies specified in the General Requirements.

b. Data shown on the Shop Drawings will be complete with respect to quantities, dimensions, specified performance and design criteria, materials, and similar data to show Engineer the services, materials, and equipment Contractor proposes to provide and to enable Engineer to review the information for the limited purposes required by Paragraph 6.17.D.

2. *Samples:*

a. Submit number of Samples specified in the Specifications.

b. Clearly identify each Sample as to material, Supplier, pertinent data such as catalog numbers, the use for which intended and other data as Engineer may require to enable Engineer to review the submittal for the limited purposes required by Paragraph 6.17.D.

Copyright © 2007 National Society of Professional Engineers for EJCDC. All rights reserved.

B. Where a Shop Drawing or Sample is required by the Contract Documents or the Schedule of Submittals, any related Work performed prior to Engineer's review and approval of the pertinent submittal will be at the sole expense and responsibility of Contractor.

C. *Submittal Procedures:*

1. Before submitting each Shop Drawing or Sample, Contractor shall have:

   a. reviewed and coordinated each Shop Drawing or Sample with other Shop Drawings and Samples and with the requirements of the Work and the Contract Documents;

   b. determined and verified all field measurements, quantities, dimensions, specified performance and design criteria, installation requirements, materials, catalog numbers, and similar information with respect thereto;

   c. determined and verified the suitability of all materials offered with respect to the indicated application, fabrication, shipping, handling, storage, assembly, and installation pertaining to the performance of the Work; and

   d. determined and verified all information relative to Contractor's responsibilities for means, methods, techniques, sequences, and procedures of construction, and safety precautions and programs incident thereto.

2. Each submittal shall bear a stamp or specific written certification that Contractor has satisfied Contractor's obligations under the Contract Documents with respect to Contractor's review and approval of that submittal.

3. With each submittal, Contractor shall give Engineer specific written notice of any variations that the Shop Drawing or Sample may have from the requirements of the Contract Documents. This notice shall be both a written communication separate from the Shop Drawings or Sample submittal; and, in addition, by a specific notation made on each Shop Drawing or Sample submitted to Engineer for review and approval of each such variation.

D. *Engineer's Review:*

1. Engineer will provide timely review of Shop Drawings and Samples in accordance with the Schedule of Submittals acceptable to Engineer. Engineer's review and approval will be only to determine if the items covered by the submittals will, after installation or incorporation in the Work, conform to the information given in the Contract Documents and be compatible with the design concept of the completed Project as a functioning whole as indicated by the Contract Documents.

2. Engineer's review and approval will not extend to means, methods, techniques, sequences, or procedures of construction (except where a particular means, method, technique, sequence, or procedure of construction is specifically and expressly called for by the Contract Documents) or to safety precautions or programs incident thereto. The review and approval of a separate item as such will not indicate approval of the assembly in which the item functions.

Copyright © 2007 National Society of Professional Engineers for EJCDC. All rights reserved.

3. Engineer's review and approval shall not relieve Contractor from responsibility for any variation from the requirements of the Contract Documents unless Contractor has complied with the requirements of Paragraph 6.17.C.3 and Engineer has given written approval of each such variation by specific written notation thereof incorporated in or accompanying the Shop Drawing or Sample. Engineer's review and approval shall not relieve Contractor from responsibility for complying with the requirements of Paragraph 6.17.C.1.

E. *Resubmittal Procedures:*

1. Contractor shall make corrections required by Engineer and shall return the required number of corrected copies of Shop Drawings and submit, as required, new Samples for review and approval. Contractor shall direct specific attention in writing to revisions other than the corrections called for by Engineer on previous submittals.

6.18 *Continuing the Work*

A. Contractor shall carry on the Work and adhere to the Progress Schedule during all disputes or disagreements with Owner. No Work shall be delayed or postponed pending resolution of any disputes or disagreements, except as permitted by Paragraph 15.04 or as Owner and Contractor may otherwise agree in writing.

6.19 *Contractor's General Warranty and Guarantee*

A. Contractor warrants and guarantees to Owner that all Work will be in accordance with the Contract Documents and will not be defective. Engineer and its officers, directors, members, partners, employees, agents, consultants, and subcontractors shall be entitled to rely on representation of Contractor's warranty and guarantee.

B. Contractor's warranty and guarantee hereunder excludes defects or damage caused by:

1. abuse, modification, or improper maintenance or operation by persons other than Contractor, Subcontractors, Suppliers, or any other individual or entity for whom Contractor is responsible; or

2. normal wear and tear under normal usage.

C. Contractor's obligation to perform and complete the Work in accordance with the Contract Documents shall be absolute. None of the following will constitute an acceptance of Work that is not in accordance with the Contract Documents or a release of Contractor's obligation to perform the Work in accordance with the Contract Documents:

1. observations by Engineer;

2. recommendation by Engineer or payment by Owner of any progress or final payment;

3. the issuance of a certificate of Substantial Completion by Engineer or any payment related thereto by Owner;

4. use or occupancy of the Work or any part thereof by Owner;

Copyright © 2007 National Society of Professional Engineers for EJCDC. All rights reserved.

5. any review and approval of a Shop Drawing or Sample submittal or the issuance of a notice of acceptability by Engineer;

6. any inspection, test, or approval by others; or

7. any correction of defective Work by Owner.

6.20 *Indemnification*

A. To the fullest extent permitted by Laws and Regulations, Contractor shall indemnify and hold harmless Owner and Engineer, and the officers, directors, members, partners, employees, agents, consultants and subcontractors of each and any of them from and against all claims, costs, losses, and damages (including but not limited to all fees and charges of engineers, architects, attorneys, and other professionals and all court or arbitration or other dispute resolution costs) arising out of or relating to the performance of the Work, provided that any such claim, cost, loss, or damage is attributable to bodily injury, sickness, disease, or death, or to injury to or destruction of tangible property (other than the Work itself), including the loss of use resulting therefrom but only to the extent caused by any negligent act or omission of Contractor, any Subcontractor, any Supplier, or any individual or entity directly or indirectly employed by any of them to perform any of the Work or anyone for whose acts any of them may be liable .

B. In any and all claims against Owner or Engineer or any of their officers, directors, members, partners, employees, agents, consultants, or subcontractors by any employee (or the survivor or personal representative of such employee) of Contractor, any Subcontractor, any Supplier, or any individual or entity directly or indirectly employed by any of them to perform any of the Work, or anyone for whose acts any of them may be liable, the indemnification obligation under Paragraph 6.20.A shall not be limited in any way by any limitation on the amount or type of damages, compensation, or benefits payable by or for Contractor or any such Subcontractor, Supplier, or other individual or entity under workers' compensation acts, disability benefit acts, or other employee benefit acts.

C. The indemnification obligations of Contractor under Paragraph 6.20.A shall not extend to the liability of Engineer and Engineer's officers, directors, members, partners, employees, agents, consultants and subcontractors arising out of:

1. the preparation or approval of, or the failure to prepare or approve maps, Drawings, opinions, reports, surveys, Change Orders, designs, or Specifications; or

2. giving directions or instructions, or failing to give them, if that is the primary cause of the injury or damage.

6.21 *Delegation of Professional Design Services*

A. Contractor will not be required to provide professional design services unless such services are specifically required by the Contract Documents for a portion of the Work or unless such services are required to carry out Contractor's responsibilities for construction means, methods,

Copyright © 2007 National Society of Professional Engineers for EJCDC. All rights reserved.

techniques, sequences and procedures. Contractor shall not be required to provide professional services in violation of applicable law.

B. If professional design services or certifications by a design professional related to systems, materials or equipment are specifically required of Contractor by the Contract Documents, Owner and Engineer will specify all performance and design criteria that such services must satisfy. Contractor shall cause such services or certifications to be provided by a properly licensed professional, whose signature and seal shall appear on all drawings, calculations, specifications, certifications, Shop Drawings and other submittals prepared by such professional. Shop Drawings and other submittals related to the Work designed or certified by such professional, if prepared by others, shall bear such professional's written approval when submitted to Engineer.

C. Owner and Engineer shall be entitled to rely upon the adequacy, accuracy and completeness of the services, certifications or approvals performed by such design professionals, provided Owner and Engineer have specified to Contractor all performance and design criteria that such services must satisfy.

D. Pursuant to this Paragraph 6.21, Engineer's review and approval of design calculations and design drawings will be only for the limited purpose of checking for conformance with performance and design criteria given and the design concept expressed in the Contract Documents. Engineer's review and approval of Shop Drawings and other submittals (except design calculations and design drawings) will be only for the purpose stated in Paragraph 6.17.D.1.

E. Contractor shall not be responsible for the adequacy of the performance or design criteria required by the Contract Documents.

ARTICLE 7 – OTHER WORK AT THE SITE

7.01 *Related Work at Site*

A. Owner may perform other work related to the Project at the Site with Owner's employees, or through other direct contracts therefor, or have other work performed by utility owners. If such other work is not noted in the Contract Documents, then:

1. written notice thereof will be given to Contractor prior to starting any such other work; and

2. if Owner and Contractor are unable to agree on entitlement to or on the amount or extent, if any, of any adjustment in the Contract Price or Contract Times that should be allowed as a result of such other work, a Claim may be made therefor as provided in Paragraph 10.05.

B. Contractor shall afford each other contractor who is a party to such a direct contract, each utility owner, and Owner, if Owner is performing other work with Owner's employees, proper and safe access to the Site, provide a reasonable opportunity for the introduction and storage of materials and equipment and the execution of such other work, and properly coordinate the Work with theirs. Contractor shall do all cutting, fitting, and patching of the Work that may be required to properly connect or otherwise make its several parts come together and properly

Copyright © 2007 National Society of Professional Engineers for EJCDC. All rights reserved.

integrate with such other work. Contractor shall not endanger any work of others by cutting, excavating, or otherwise altering such work; provided, however, that Contractor may cut or alter others' work with the written consent of Engineer and the others whose work will be affected. The duties and responsibilities of Contractor under this Paragraph are for the benefit of such utility owners and other contractors to the extent that there are comparable provisions for the benefit of Contractor in said direct contracts between Owner and such utility owners and other contractors.

C. If the proper execution or results of any part of Contractor's Work depends upon work performed by others under this Article 7, Contractor shall inspect such other work and promptly report to Engineer in writing any delays, defects, or deficiencies in such other work that render it unavailable or unsuitable for the proper execution and results of Contractor's Work. Contractor's failure to so report will constitute an acceptance of such other work as fit and proper for integration with Contractor's Work except for latent defects and deficiencies in such other work.

7.02 *Coordination*

A. If Owner intends to contract with others for the performance of other work on the Project at the Site, the following will be set forth in Supplementary Conditions:

1. the individual or entity who will have authority and responsibility for coordination of the activities among the various contractors will be identified;

2. the specific matters to be covered by such authority and responsibility will be itemized; and

3. the extent of such authority and responsibilities will be provided.

B. Unless otherwise provided in the Supplementary Conditions, Owner shall have sole authority and responsibility for such coordination.

7.03 *Legal Relationships*

A. Paragraphs 7.01.A and 7.02 are not applicable for utilities not under the control of Owner.

B. Each other direct contract of Owner under Paragraph 7.01.A shall provide that the other contractor is liable to Owner and Contractor for the reasonable direct delay and disruption costs incurred by Contractor as a result of the other contractor's wrongful actions or inactions.

C. Contractor shall be liable to Owner and any other contractor under direct contract to Owner for the reasonable direct delay and disruption costs incurred by such other contractor as a result of Contractor's wrongful action or inactions.

ARTICLE 8 – OWNER'S RESPONSIBILITIES

8.01 *Communications to Contractor*

A. Except as otherwise provided in these General Conditions, Owner shall issue all communications to Contractor through Engineer.

Copyright © 2007 National Society of Professional Engineers for EJCDC. All rights reserved.

8.02 *Replacement of Engineer*

A. In case of termination of the employment of Engineer, Owner shall appoint an engineer to whom Contractor makes no reasonable objection, whose status under the Contract Documents shall be that of the former Engineer.

8.03 *Furnish Data*

A. Owner shall promptly furnish the data required of Owner under the Contract Documents.

8.04 *Pay When Due*

A. Owner shall make payments to Contractor when they are due as provided in Paragraphs 14.02.C and 14.07.C.

8.05 *Lands and Easements; Reports and Tests*

A. Owner's duties with respect to providing lands and easements and providing engineering surveys to establish reference points are set forth in Paragraphs 4.01 and 4.05. Paragraph 4.02 refers to Owner's identifying and making available to Contractor copies of reports of explorations and tests of subsurface conditions and drawings of physical conditions relating to existing surface or subsurface structures at the Site.

8.06 *Insurance*

A. Owner's responsibilities, if any, with respect to purchasing and maintaining liability and property insurance are set forth in Article 5.

8.07 *Change Orders*

A. Owner is obligated to execute Change Orders as indicated in Paragraph 10.03.

8.08 *Inspections, Tests, and Approvals*

A. Owner's responsibility with respect to certain inspections, tests, and approvals is set forth in Paragraph 13.03.B.

8.09 *Limitations on Owner's Responsibilities*

A. The Owner shall not supervise, direct, or have control or authority over, nor be responsible for, Contractor's means, methods, techniques, sequences, or procedures of construction, or the safety precautions and programs incident thereto, or for any failure of Contractor to comply with Laws and Regulations applicable to the performance of the Work. Owner will not be responsible for Contractor's failure to perform the Work in accordance with the Contract Documents.

Copyright © 2007 National Society of Professional Engineers for EJCDC. All rights reserved.

8.10 *Undisclosed Hazardous Environmental Condition*

A. Owner's responsibility in respect to an undisclosed Hazardous Environmental Condition is set forth in Paragraph 4.06.

8.11 *Evidence of Financial Arrangements*

A. Upon request of Contractor, Owner shall furnish Contractor reasonable evidence that financial arrangements have been made to satisfy Owner's obligations under the Contract Documents.

8.12 *Compliance with Safety Program*

A. While at the Site, Owner's employees and representatives shall comply with the specific applicable requirements of Contractor's safety programs of which Owner has been informed pursuant to Paragraph 6.13.D.

ARTICLE 9 – ENGINEER'S STATUS DURING CONSTRUCTION

9.01 *Owner's Representative*

A. Engineer will be Owner's representative during the construction period. The duties and responsibilities and the limitations of authority of Engineer as Owner's representative during construction are set forth in the Contract Documents.

9.02 *Visits to Site*

A. Engineer will make visits to the Site at intervals appropriate to the various stages of construction as Engineer deems necessary in order to observe as an experienced and qualified design professional the progress that has been made and the quality of the various aspects of Contractor's executed Work. Based on information obtained during such visits and observations, Engineer, for the benefit of Owner, will determine, in general, if the Work is proceeding in accordance with the Contract Documents. Engineer will not be required to make exhaustive or continuous inspections on the Site to check the quality or quantity of the Work. Engineer's efforts will be directed toward providing for Owner a greater degree of confidence that the completed Work will conform generally to the Contract Documents. On the basis of such visits and observations, Engineer will keep Owner informed of the progress of the Work and will endeavor to guard Owner against defective Work.

B. Engineer's visits and observations are subject to all the limitations on Engineer's authority and responsibility set forth in Paragraph 9.09. Particularly, but without limitation, during or as a result of Engineer's visits or observations of Contractor's Work, Engineer will not supervise, direct, control, or have authority over or be responsible for Contractor's means, methods, techniques, sequences, or procedures of construction, or the safety precautions and programs incident thereto, or for any failure of Contractor to comply with Laws and Regulations applicable to the performance of the Work.

Copyright © 2007 National Society of Professional Engineers for EJCDC. All rights reserved.

~~9.03 *Project Representative*~~

A. ~~If Owner and Engineer agree, Engineer will furnish a Resident Project Representative to assist Engineer in providing more extensive observation of the Work. The authority and responsibilities of any such Resident Project Representative and assistants will be as provided in the Supplementary Conditions, and limitations on the responsibilities thereof will be as provided in Paragraph 9.09. If Owner designates another representative or agent to represent Owner at the Site who is not Engineer's consultant, agent or employee, the responsibilities and authority and limitations thereon of such other individual or entity will be as provided in the Supplementary Conditions.~~

9.04 *Authorized Variations in Work*

A. Engineer may authorize minor variations in the Work from the requirements of the Contract Documents which do not involve an adjustment in the Contract Price or the Contract Times and are compatible with the design concept of the completed Project as a functioning whole as indicated by the Contract Documents. These may be accomplished by a Field Order and will be binding on Owner and also on Contractor, who shall perform the Work involved promptly. If Owner or Contractor believes that a Field Order justifies an adjustment in the Contract Price or Contract Times, or both, and the parties are unable to agree on entitlement to or on the amount or extent, if any, of any such adjustment, a Claim may be made therefor as provided in Paragraph 10.05.

9.05 *Rejecting Defective Work*

A. Engineer will have authority to reject Work which Engineer believes to be defective, or that Engineer believes will not produce a completed Project that conforms to the Contract Documents or that will prejudice the integrity of the design concept of the completed Project as a functioning whole as indicated by the Contract Documents. Engineer will also have authority to require special inspection or testing of the Work as provided in Paragraph 13.04, whether or not the Work is fabricated, installed, or completed.

9.06 *Shop Drawings, Change Orders and Payments*

A. In connection with Engineer's authority, and limitations thereof, as to Shop Drawings and Samples, see Paragraph 6.17.

B. In connection with Engineer's authority, and limitations thereof, as to design calculations and design drawings submitted in response to a delegation of professional design services, if any, see Paragraph 6.21.

C. In connection with Engineer's authority as to Change Orders, see Articles 10, 11, and 12.

D. In connection with Engineer's authority as to Applications for Payment, see Article 14.

Copyright © 2007 National Society of Professional Engineers for EJCDC. All rights reserved.

9.07 *Determinations for Unit Price Work*

A. Engineer will determine the actual quantities and classifications of Unit Price Work performed by Contractor. Engineer will review with Contractor the Engineer's preliminary determinations on such matters before rendering a written decision thereon (by recommendation of an Application for Payment or otherwise). Engineer's written decision thereon will be final and binding (except as modified by Engineer to reflect changed factual conditions or more accurate data) upon Owner and Contractor, subject to the provisions of Paragraph 10.05.

9.08 *Decisions on Requirements of Contract Documents and Acceptability of Work*

A. Engineer will be the initial interpreter of the requirements of the Contract Documents and judge of the acceptability of the Work thereunder. All matters in question and other matters between Owner and Contractor arising prior to the date final payment is due relating to the acceptability of the Work, and the interpretation of the requirements of the Contract Documents pertaining to the performance of the Work, will be referred initially to Engineer in writing within 30 days of the event giving rise to the question.

B. Engineer will, with reasonable promptness, render a written decision on the issue referred. If Owner or Contractor believes that any such decision entitles them to an adjustment in the Contract Price or Contract Times or both, a Claim may be made under Paragraph 10.05. The date of Engineer's decision shall be the date of the event giving rise to the issues referenced for the purposes of Paragraph 10.05.B.

C. Engineer's written decision on the issue referred will be final and binding on Owner and Contractor, subject to the provisions of Paragraph 10.05.

D. When functioning as interpreter and judge under this Paragraph 9.08, Engineer will not show partiality to Owner or Contractor and will not be liable in connection with any interpretation or decision rendered in good faith in such capacity.

9.09 *Limitations on Engineer's Authority and Responsibilities*

A. Neither Engineer's authority or responsibility under this Article 9 or under any other provision of the Contract Documents nor any decision made by Engineer in good faith either to exercise or not exercise such authority or responsibility or the undertaking, exercise, or performance of any authority or responsibility by Engineer shall create, impose, or give rise to any duty in contract, tort, or otherwise owed by Engineer to Contractor, any Subcontractor, any Supplier, any other individual or entity, or to any surety for or employee or agent of any of them.

B. Engineer will not supervise, direct, control, or have authority over or be responsible for Contractor's means, methods, techniques, sequences, or procedures of construction, or the safety precautions and programs incident thereto, or for any failure of Contractor to comply with Laws and Regulations applicable to the performance of the Work. Engineer will not be responsible for Contractor's failure to perform the Work in accordance with the Contract Documents.

Copyright © 2007 National Society of Professional Engineers for EJCDC. All rights reserved.

C. Engineer will not be responsible for the acts or omissions of Contractor or of any Subcontractor, any Supplier, or of any other individual or entity performing any of the Work.

D. Engineer's review of the final Application for Payment and accompanying documentation and all maintenance and operating instructions, schedules, guarantees, bonds, certificates of inspection, tests and approvals, and other documentation required to be delivered by Paragraph 14.07.A will only be to determine generally that their content complies with the requirements of, and in the case of certificates of inspections, tests, and approvals that the results certified indicate compliance with, the Contract Documents.

E. The limitations upon authority and responsibility set forth in this Paragraph 9.09 shall also apply to the Resident Project Representative, if any, and assistants, if any.

9.10 *Compliance with Safety Program*

A. While at the Site, Engineer's employees and representatives shall comply with the specific applicable requirements of Contractor's safety programs of which Engineer has been informed pursuant to Paragraph 6.13.D.

ARTICLE 10 – CHANGES IN THE WORK; CLAIMS

10.01 *Authorized Changes in the Work*

A. Without invalidating the Contract and without notice to any surety, Owner may, at any time or from time to time, order additions, deletions, or revisions in the Work by a Change Order, or a Work Change Directive. Upon receipt of any such document, Contractor shall promptly proceed with the Work involved which will be performed under the applicable conditions of the Contract Documents (except as otherwise specifically provided).

B. If Owner and Contractor are unable to agree on entitlement to, or on the amount or extent, if any, of an adjustment in the Contract Price or Contract Times, or both, that should be allowed as a result of a Work Change Directive, a Claim may be made therefor as provided in Paragraph 10.05.

10.02 *Unauthorized Changes in the Work*

A. Contractor shall not be entitled to an increase in the Contract Price or an extension of the Contract Times with respect to any work performed that is not required by the Contract Documents as amended, modified, or supplemented as provided in Paragraph 3.04, except in the case of an emergency as provided in Paragraph 6.16 or in the case of uncovering Work as provided in Paragraph 13.04.D.

10.03 *Execution of Change Orders*

A. Owner and Contractor shall execute appropriate Change Orders recommended by Engineer covering:

Copyright © 2007 National Society of Professional Engineers for EJCDC. All rights reserved.

1. changes in the Work which are: (i) ordered by Owner pursuant to Paragraph 10.01.A, (ii) required because of acceptance of defective Work under Paragraph 13.08.A or Owner's correction of defective Work under Paragraph 13.09, or (iii) agreed to by the parties;

2. changes in the Contract Price or Contract Times which are agreed to by the parties, including any undisputed sum or amount of time for Work actually performed in accordance with a Work Change Directive; and

3. changes in the Contract Price or Contract Times which embody the substance of any written decision rendered by Engineer pursuant to Paragraph 10.05; provided that, in lieu of executing any such Change Order, an appeal may be taken from any such decision in accordance with the provisions of the Contract Documents and applicable Laws and Regulations, but during any such appeal, Contractor shall carry on the Work and adhere to the Progress Schedule as provided in Paragraph 6.18.A.

10.04 *Notification to Surety*

A. If the provisions of any bond require notice to be given to a surety of any change affecting the general scope of the Work or the provisions of the Contract Documents (including, but not limited to, Contract Price or Contract Times), the giving of any such notice will be Contractor's responsibility. The amount of each applicable bond will be adjusted to reflect the effect of any such change.

10.05 *Claims*

A. *Engineer's Decision Required*: All Claims, except those waived pursuant to Paragraph 14.09, shall be referred to the Engineer for decision. A decision by Engineer shall be required as a condition precedent to any exercise by Owner or Contractor of any rights or remedies either may otherwise have under the Contract Documents or by Laws and Regulations in respect of such Claims.

B. *Notice:* Written notice stating the general nature of each Claim shall be delivered by the claimant to Engineer and the other party to the Contract promptly (but in no event later than 30 days) after the start of the event giving rise thereto. The responsibility to substantiate a Claim shall rest with the party making the Claim. Notice of the amount or extent of the Claim, with supporting data shall be delivered to the Engineer and the other party to the Contract within 60 days after the start of such event (unless Engineer allows additional time for claimant to submit additional or more accurate data in support of such Claim). A Claim for an adjustment in Contract Price shall be prepared in accordance with the provisions of Paragraph 12.01.B. A Claim for an adjustment in Contract Times shall be prepared in accordance with the provisions of Paragraph 12.02.B. Each Claim shall be accompanied by claimant's written statement that the adjustment claimed is the entire adjustment to which the claimant believes it is entitled as a result of said event. The opposing party shall submit any response to Engineer and the claimant within 30 days after receipt of the claimant's last submittal (unless Engineer allows additional time).

Copyright © 2007 National Society of Professional Engineers for EJCDC. All rights reserved.

C. *Engineer's Action*: Engineer will review each Claim and, within 30 days after receipt of the last submittal of the claimant or the last submittal of the opposing party, if any, take one of the following actions in writing:

1. deny the Claim in whole or in part;

2. approve the Claim; or

3. notify the parties that the Engineer is unable to resolve the Claim if, in the Engineer's sole discretion, it would be inappropriate for the Engineer to do so. For purposes of further resolution of the Claim, such notice shall be deemed a denial.

D. In the event that Engineer does not take action on a Claim within said 30 days, the Claim shall be deemed denied.

E. Engineer's written action under Paragraph 10.05.C or denial pursuant to Paragraphs 10.05.C.3 or 10.05.D will be final and binding upon Owner and Contractor, unless Owner or Contractor invoke the dispute resolution procedure set forth in Article 16 within 30 days of such action or denial.

F. No Claim for an adjustment in Contract Price or Contract Times will be valid if not submitted in accordance with this Paragraph 10.05.

ARTICLE 11 – COST OF THE WORK; ALLOWANCES; UNIT PRICE WORK

11.01 *Cost of the Work*

A. *Costs Included:* The term Cost of the Work means the sum of all costs, except those excluded in Paragraph 11.01.B, necessarily incurred and paid by Contractor in the proper performance of the Work. When the value of any Work covered by a Change Order or when a Claim for an adjustment in Contract Price is determined on the basis of Cost of the Work, the costs to be reimbursed to Contractor will be only those additional or incremental costs required because of the change in the Work or because of the event giving rise to the Claim. Except as otherwise may be agreed to in writing by Owner, such costs shall be in amounts no higher than those prevailing in the locality of the Project, shall not include any of the costs itemized in Paragraph 11.01.B, and shall include only the following items:

1. Payroll costs for employees in the direct employ of Contractor in the performance of the Work under schedules of job classifications agreed upon by Owner and Contractor. Such employees shall include, without limitation, superintendents, foremen, and other personnel employed full time on the Work. Payroll costs for employees not employed full time on the Work shall be apportioned on the basis of their time spent on the Work. Payroll costs shall include, but not be limited to, salaries and wages plus the cost of fringe benefits, which shall include social security contributions, unemployment, excise, and payroll taxes, workers' compensation, health and retirement benefits, bonuses, sick leave, vacation and holiday pay applicable thereto. The expenses of performing Work outside of regular working hours, on Saturday, Sunday, or legal holidays, shall be included in the above to the extent authorized by Owner.

Copyright © 2007 National Society of Professional Engineers for EJCDC. All rights reserved.

2. Cost of all materials and equipment furnished and incorporated in the Work, including costs of transportation and storage thereof, and Suppliers' field services required in connection therewith. All cash discounts shall accrue to Contractor unless Owner deposits funds with Contractor with which to make payments, in which case the cash discounts shall accrue to Owner. All trade discounts, rebates and refunds and returns from sale of surplus materials and equipment shall accrue to Owner, and Contractor shall make provisions so that they may be obtained.

3. Payments made by Contractor to Subcontractors for Work performed by Subcontractors. If required by Owner, Contractor shall obtain competitive bids from subcontractors acceptable to Owner and Contractor and shall deliver such bids to Owner, who will then determine, with the advice of Engineer, which bids, if any, will be acceptable. If any subcontract provides that the Subcontractor is to be paid on the basis of Cost of the Work plus a fee, the Subcontractor's Cost of the Work and fee shall be determined in the same manner as Contractor's Cost of the Work and fee as provided in this Paragraph 11.01.

4. Costs of special consultants (including but not limited to engineers, architects, testing laboratories, surveyors, attorneys, and accountants) employed for services specifically related to the Work.

5. Supplemental costs including the following:

    a. The proportion of necessary transportation, travel, and subsistence expenses of Contractor's employees incurred in discharge of duties connected with the Work.

    b. Cost, including transportation and maintenance, of all materials, supplies, equipment, machinery, appliances, office, and temporary facilities at the Site, and hand tools not owned by the workers, which are consumed in the performance of the Work, and cost, less market value, of such items used but not consumed which remain the property of Contractor.

    c. Rentals of all construction equipment and machinery, and the parts thereof whether rented from Contractor or others in accordance with rental agreements approved by Owner with the advice of Engineer, and the costs of transportation, loading, unloading, assembly, dismantling, and removal thereof. All such costs shall be in accordance with the terms of said rental agreements. The rental of any such equipment, machinery, or parts shall cease when the use thereof is no longer necessary for the Work.

    d. Sales, consumer, use, and other similar taxes related to the Work, and for which Contractor is liable, as imposed by Laws and Regulations.

    e. Deposits lost for causes other than negligence of Contractor, any Subcontractor, or anyone directly or indirectly employed by any of them or for whose acts any of them may be liable, and royalty payments and fees for permits and licenses.

    f. Losses and damages (and related expenses) caused by damage to the Work, not compensated by insurance or otherwise, sustained by Contractor in connection with the performance of the Work (except losses and damages within the deductible amounts of

Copyright © 2007 National Society of Professional Engineers for EJCDC. All rights reserved.

property insurance established in accordance with Paragraph 5.06.D), provided such losses and damages have resulted from causes other than the negligence of Contractor, any Subcontractor, or anyone directly or indirectly employed by any of them or for whose acts any of them may be liable. Such losses shall include settlements made with the written consent and approval of Owner. No such losses, damages, and expenses shall be included in the Cost of the Work for the purpose of determining Contractor's fee.

g. The cost of utilities, fuel, and sanitary facilities at the Site.

h. Minor expenses such as telegrams, long distance telephone calls, telephone service at the Site, express and courier services, and similar petty cash items in connection with the Work.

i. The costs of premiums for all bonds and insurance Contractor is required by the Contract Documents to purchase and maintain.

B. *Costs Excluded:* The term Cost of the Work shall not include any of the following items:

1. Payroll costs and other compensation of Contractor's officers, executives, principals (of partnerships and sole proprietorships), general managers, safety managers, engineers, architects, estimators, attorneys, auditors, accountants, purchasing and contracting agents, expediters, timekeepers, clerks, and other personnel employed by Contractor, whether at the Site or in Contractor's principal or branch office for general administration of the Work and not specifically included in the agreed upon schedule of job classifications referred to in Paragraph 11.01.A.1 or specifically covered by Paragraph 11.01.A.4, all of which are to be considered administrative costs covered by the Contractor's fee.

2. Expenses of Contractor's principal and branch offices other than Contractor's office at the Site.

3. Any part of Contractor's capital expenses, including interest on Contractor's capital employed for the Work and charges against Contractor for delinquent payments.

4. Costs due to the negligence of Contractor, any Subcontractor, or anyone directly or indirectly employed by any of them or for whose acts any of them may be liable, including but not limited to, the correction of defective Work, disposal of materials or equipment wrongly supplied, and making good any damage to property.

5. Other overhead or general expense costs of any kind and the costs of any item not specifically and expressly included in Paragraphs 11.01.A.

C. *Contractor's Fee:* When all the Work is performed on the basis of cost-plus, Contractor's fee shall be determined as set forth in the Agreement. When the value of any Work covered by a Change Order or when a Claim for an adjustment in Contract Price is determined on the basis of Cost of the Work, Contractor's fee shall be determined as set forth in Paragraph 12.01.C.

Copyright © 2007 National Society of Professional Engineers for EJCDC. All rights reserved.

D. *Documentation:* Whenever the Cost of the Work for any purpose is to be determined pursuant to Paragraphs 11.01.A and 11.01.B, Contractor will establish and maintain records thereof in accordance with generally accepted accounting practices and submit in a form acceptable to Engineer an itemized cost breakdown together with supporting data.

11.02 *Allowances*

A. It is understood that Contractor has included in the Contract Price all allowances so named in the Contract Documents and shall cause the Work so covered to be performed for such sums and by such persons or entities as may be acceptable to Owner and Engineer.

B. *Cash Allowances:*

1. Contractor agrees that:

a. the cash allowances include the cost to Contractor (less any applicable trade discounts) of materials and equipment required by the allowances to be delivered at the Site, and all applicable taxes; and

b. Contractor's costs for unloading and handling on the Site, labor, installation, overhead, profit, and other expenses contemplated for the cash allowances have been included in the Contract Price and not in the allowances, and no demand for additional payment on account of any of the foregoing will be valid.

C. *Contingency Allowance:*

1. Contractor agrees that a contingency allowance, if any, is for the sole use of Owner to cover unanticipated costs.

D. Prior to final payment, an appropriate Change Order will be issued as recommended by Engineer to reflect actual amounts due Contractor on account of Work covered by allowances, and the Contract Price shall be correspondingly adjusted.

11.03 *Unit Price Work*

A. Where the Contract Documents provide that all or part of the Work is to be Unit Price Work, initially the Contract Price will be deemed to include for all Unit Price Work an amount equal to the sum of the unit price for each separately identified item of Unit Price Work times the estimated quantity of each item as indicated in the Agreement.

B. The estimated quantities of items of Unit Price Work are not guaranteed and are solely for the purpose of comparison of Bids and determining an initial Contract Price. Determinations of the actual quantities and classifications of Unit Price Work performed by Contractor will be made by Engineer subject to the provisions of Paragraph 9.07.

C. Each unit price will be deemed to include an amount considered by Contractor to be adequate to cover Contractor's overhead and profit for each separately identified item.

Copyright © 2007 National Society of Professional Engineers for EJCDC. All rights reserved.

D. Owner or Contractor may make a Claim for an adjustment in the Contract Price in accordance with Paragraph 10.05 if:

1. the quantity of any item of Unit Price Work performed by Contractor differs materially and significantly from the estimated quantity of such item indicated in the Agreement; and

2. there is no corresponding adjustment with respect to any other item of Work; and

3. Contractor believes that Contractor is entitled to an increase in Contract Price as a result of having incurred additional expense or Owner believes that Owner is entitled to a decrease in Contract Price and the parties are unable to agree as to the amount of any such increase or decrease.

ARTICLE 12 – CHANGE OF CONTRACT PRICE; CHANGE OF CONTRACT TIMES

12.01 *Change of Contract Price*

A. The Contract Price may only be changed by a Change Order. Any Claim for an adjustment in the Contract Price shall be based on written notice submitted by the party making the Claim to the Engineer and the other party to the Contract in accordance with the provisions of Paragraph 10.05.

B. The value of any Work covered by a Change Order or of any Claim for an adjustment in the Contract Price will be determined as follows:

1. where the Work involved is covered by unit prices contained in the Contract Documents, by application of such unit prices to the quantities of the items involved (subject to the provisions of Paragraph 11.03); or

2. where the Work involved is not covered by unit prices contained in the Contract Documents, by a mutually agreed lump sum (which may include an allowance for overhead and profit not necessarily in accordance with Paragraph 12.01.C.2); or

3. where the Work involved is not covered by unit prices contained in the Contract Documents and agreement to a lump sum is not reached under Paragraph 12.01.B.2, on the basis of the Cost of the Work (determined as provided in Paragraph 11.01) plus a Contractor's fee for overhead and profit (determined as provided in Paragraph 12.01.C).

C. *Contractor's Fee:* The Contractor's fee for overhead and profit shall be determined as follows:

1. a mutually acceptable fixed fee; or

2. if a fixed fee is not agreed upon, then a fee based on the following percentages of the various portions of the Cost of the Work:

a. for costs incurred under Paragraphs 11.01.A.1 and 11.01.A.2, the Contractor's fee shall be 8 percent;

b. for costs incurred under Paragraph 11.01.A.3, the Contractor's fee shall be five percent;

Copyright © 2007 National Society of Professional Engineers for EJCDC. All rights reserved.

c. where one or more tiers of subcontracts are on the basis of Cost of the Work plus a fee and no fixed fee is agreed upon, the intent of Paragraphs 12.01.C.2.a and 12.01.C.2.b is that the Subcontractor who actually performs the Work, at whatever tier, will be paid a fee of 8 percent of the costs incurred by such Subcontractor under Paragraphs 11.01.A.1 and 11.01.A.2 and that any higher tier Subcontractor and Contractor will each be paid a fee of five percent of the amount paid to the next lower tier Subcontractor;

d. no fee shall be payable on the basis of costs itemized under Paragraphs 11.01.A.4, 11.01.A.5, and 11.01.B;

e. the amount of credit to be allowed by Contractor to Owner for any change which results in a net decrease in cost will be the amount of the actual net decrease in cost plus a deduction in Contractor's fee by an amount equal to five percent of such net decrease; and

f. when both additions and credits are involved in any one change, the adjustment in Contractor's fee shall be computed on the basis of the net change in accordance with Paragraphs 12.01.C.2.a through 12.01.C.2.e, inclusive.

12.02 *Change of Contract Times*

A. The Contract Times may only be changed by a Change Order. Any Claim for an adjustment in the Contract Times shall be based on written notice submitted by the party making the Claim to the Engineer and the other party to the Contract in accordance with the provisions of Paragraph 10.05.

B. Any adjustment of the Contract Times covered by a Change Order or any Claim for an adjustment in the Contract Times will be determined in accordance with the provisions of this Article 12.

12.03 *Delays*

A. Where Contractor is prevented from completing any part of the Work within the Contract Times due to delay beyond the control of Contractor, the Contract Times will be extended in an amount equal to the time lost due to such delay if a Claim is made therefor as provided in Paragraph 12.02.A. Delays beyond the control of Contractor shall include, but not be limited to, acts or neglect by Owner, acts or neglect of utility owners or other contractors performing other work as contemplated by Article 7, fires, floods, epidemics, abnormal weather conditions, or acts of God.

B. If Owner, Engineer, or other contractors or utility owners performing other work for Owner as contemplated by Article 7, or anyone for whom Owner is responsible, delays, disrupts, or interferes with the performance or progress of the Work, then Contractor shall be entitled to an equitable adjustment in the Contract Price or the Contract Times, or both. Contractor's entitlement to an adjustment of the Contract Times is conditioned on such adjustment being essential to Contractor's ability to complete the Work within the Contract Times.

Copyright © 2007 National Society of Professional Engineers for EJCDC. All rights reserved.

C. If Contractor is delayed in the performance or progress of the Work by fire, flood, epidemic, abnormal weather conditions, acts of God, acts or failures to act of utility owners not under the control of Owner, or other causes not the fault of and beyond control of Owner and Contractor, then Contractor shall be entitled to an equitable adjustment in Contract Times, if such adjustment is essential to Contractor's ability to complete the Work within the Contract Times. Such an adjustment shall be Contractor's sole and exclusive remedy for the delays described in this Paragraph 12.03.C.

D. Owner, Engineer, and their officers, directors, members, partners, employees, agents, consultants, or subcontractors shall not be liable to Contractor for any claims, costs, losses, or damages (including but not limited to all fees and charges of engineers, architects, attorneys, and other professionals and all court or arbitration or other dispute resolution costs) sustained by Contractor on or in connection with any other project or anticipated project.

E. Contractor shall not be entitled to an adjustment in Contract Price or Contract Times for delays within the control of Contractor. Delays attributable to and within the control of a Subcontractor or Supplier shall be deemed to be delays within the control of Contractor.

ARTICLE 13 – TESTS AND INSPECTIONS; CORRECTION, REMOVAL OR ACCEPTANCE OF DEFECTIVE WORK

13.01 *Notice of Defects*

A. Prompt notice of all defective Work of which Owner or Engineer has actual knowledge will be given to Contractor. Defective Work may be rejected, corrected, or accepted as provided in this Article 13.

13.02 *Access to Work*

A. Owner, Engineer, their consultants and other representatives and personnel of Owner, independent testing laboratories, and governmental agencies with jurisdictional interests will have access to the Site and the Work at reasonable times for their observation, inspection, and testing. Contractor shall provide them proper and safe conditions for such access and advise them of Contractor's safety procedures and programs so that they may comply therewith as applicable.

13.03 *Tests and Inspections*

A. Contractor shall give Engineer timely notice of readiness of the Work for all required inspections, tests, or approvals and shall cooperate with inspection and testing personnel to facilitate required inspections or tests.

B. Owner shall employ and pay for the services of an independent testing laboratory to perform all inspections, tests, or approvals required by the Contract Documents except:

1. for inspections, tests, or approvals covered by Paragraphs 13.03.C and 13.03.D below;

Copyright © 2007 National Society of Professional Engineers for EJCDC. All rights reserved.

2. that costs incurred in connection with tests or inspections conducted pursuant to Paragraph 13.04.B shall be paid as provided in Paragraph 13.04.C; and

3. as otherwise specifically provided in the Contract Documents.

C. If Laws or Regulations of any public body having jurisdiction require any Work (or part thereof) specifically to be inspected, tested, or approved by an employee or other representative of such public body, Contractor shall assume full responsibility for arranging and obtaining such inspections, tests, or approvals, pay all costs in connection therewith, and furnish Engineer the required certificates of inspection or approval.

D. Contractor shall be responsible for arranging and obtaining and shall pay all costs in connection with any inspections, tests, or approvals required for Owner's and Engineer's acceptance of materials or equipment to be incorporated in the Work; or acceptance of materials, mix designs, or equipment submitted for approval prior to Contractor's purchase thereof for incorporation in the Work. Such inspections, tests, or approvals shall be performed by organizations acceptable to Owner and Engineer.

E. If any Work (or the work of others) that is to be inspected, tested, or approved is covered by Contractor without written concurrence of Engineer, Contractor shall, if requested by Engineer, uncover such Work for observation.

F. Uncovering Work as provided in Paragraph 13.03.E shall be at Contractor's expense unless Contractor has given Engineer timely notice of Contractor's intention to cover the same and Engineer has not acted with reasonable promptness in response to such notice.

13.04 *Uncovering Work*

A. If any Work is covered contrary to the written request of Engineer, it must, if requested by Engineer, be uncovered for Engineer's observation and replaced at Contractor's expense.

B. If Engineer considers it necessary or advisable that covered Work be observed by Engineer or inspected or tested by others, Contractor, at Engineer's request, shall uncover, expose, or otherwise make available for observation, inspection, or testing as Engineer may require, that portion of the Work in question, furnishing all necessary labor, material, and equipment.

C. If it is found that the uncovered Work is defective, Contractor shall pay all claims, costs, losses, and damages (including but not limited to all fees and charges of engineers, architects, attorneys, and other professionals and all court or arbitration or other dispute resolution costs) arising out of or relating to such uncovering, exposure, observation, inspection, and testing, and of satisfactory replacement or reconstruction (including but not limited to all costs of repair or replacement of work of others); and Owner shall be entitled to an appropriate decrease in the Contract Price. If the parties are unable to agree as to the amount thereof, Owner may make a Claim therefor as provided in Paragraph 10.05.

D. If the uncovered Work is not found to be defective, Contractor shall be allowed an increase in the Contract Price or an extension of the Contract Times, or both, directly attributable to such uncovering, exposure, observation, inspection, testing, replacement, and reconstruction. If the

Copyright © 2007 National Society of Professional Engineers for EJCDC. All rights reserved.

parties are unable to agree as to the amount or extent thereof, Contractor may make a Claim therefor as provided in Paragraph 10.05.

13.05 *Owner May Stop the Work*

A. If the Work is defective, or Contractor fails to supply sufficient skilled workers or suitable materials or equipment, or fails to perform the Work in such a way that the completed Work will conform to the Contract Documents, Owner may order Contractor to stop the Work, or any portion thereof, until the cause for such order has been eliminated; however, this right of Owner to stop the Work shall not give rise to any duty on the part of Owner to exercise this right for the benefit of Contractor, any Subcontractor, any Supplier, any other individual or entity, or any surety for, or employee or agent of any of them.

13.06 *Correction or Removal of Defective Work*

A. Promptly after receipt of written notice, Contractor shall correct all defective Work, whether or not fabricated, installed, or completed, or, if the Work has been rejected by Engineer, remove it from the Project and replace it with Work that is not defective. Contractor shall pay all claims, costs, losses, and damages (including but not limited to all fees and charges of engineers, architects, attorneys, and other professionals and all court or arbitration or other dispute resolution costs) arising out of or relating to such correction or removal (including but not limited to all costs of repair or replacement of work of others).

B. When correcting defective Work under the terms of this Paragraph 13.06 or Paragraph 13.07, Contractor shall take no action that would void or otherwise impair Owner's special warranty and guarantee, if any, on said Work.

~~13.07 *Correction Period*~~

A. ~~If within one year after the date of Substantial Completion (or such longer period of time as may be prescribed by the terms of any applicable special guarantee required by the Contract Documents) or by any specific provision of the Contract Documents, any Work is found to be defective, or if the repair of any damages to the land or areas made available for Contractor's use by Owner or permitted by Laws and Regulations as contemplated in Paragraph 6.11.A is found to be defective, Contractor shall promptly, without cost to Owner and in accordance with Owner's written instructions:~~

~~1. repair such defective land or areas; or~~

~~2. correct such defective Work; or~~

~~3. if the defective Work has been rejected by Owner, remove it from the Project and replace it with Work that is not defective, and~~

~~4. satisfactorily correct or repair or remove and replace any damage to other Work, to the work of others or other land or areas resulting therefrom.~~

Copyright © 2007 National Society of Professional Engineers for EJCDC. All rights reserved.

B. ~~If Contractor does not promptly comply with the terms of Owner's written instructions, or in an emergency where delay would cause serious risk of loss or damage, Owner may have the defective Work corrected or repaired or may have the rejected Work removed and replaced. All claims, costs, losses, and damages (including but not limited to all fees and charges of engineers, architects, attorneys, and other professionals and all court or arbitration or other dispute resolution costs) arising out of or relating to such correction or repair or such removal and replacement (including but not limited to all costs of repair or replacement of work of others) will be paid by Contractor.~~

C. ~~In special circumstances where a particular item of equipment is placed in continuous service before Substantial Completion of all the Work, the correction period for that item may start to run from an earlier date if so provided in the Specifications.~~

D. ~~Where defective Work (and damage to other Work resulting therefrom) has been corrected or removed and replaced under this Paragraph 13.07, the correction period hereunder with respect to such Work will be extended for an additional period of one year after such correction or removal and replacement has been satisfactorily completed.~~

E. ~~Contractor's obligations under this Paragraph 13.07 are in addition to any other obligation or warranty. The provisions of this Paragraph 13.07 shall not be construed as a substitute for, or a waiver of, the provisions of any applicable statute of limitation or repose.~~

13.08 *Acceptance of Defective Work*

A. If, instead of requiring correction or removal and replacement of defective Work, Owner (and, prior to Engineer's recommendation of final payment, Engineer) prefers to accept it, Owner may do so. Contractor shall pay all claims, costs, losses, and damages (including but not limited to all fees and charges of engineers, architects, attorneys, and other professionals and all court or arbitration or other dispute resolution costs) attributable to Owner's evaluation of and determination to accept such defective Work (such costs to be approved by Engineer as to reasonableness) and for the diminished value of the Work to the extent not otherwise paid by Contractor pursuant to this sentence. If any such acceptance occurs prior to Engineer's recommendation of final payment, a Change Order will be issued incorporating the necessary revisions in the Contract Documents with respect to the Work, and Owner shall be entitled to an appropriate decrease in the Contract Price, reflecting the diminished value of Work so accepted. If the parties are unable to agree as to the amount thereof, Owner may make a Claim therefor as provided in Paragraph 10.05. If the acceptance occurs after such recommendation, an appropriate amount will be paid by Contractor to Owner.

13.09 *Owner May Correct Defective Work*

A. If Contractor fails within a reasonable time after written notice from Engineer to correct defective Work, or to remove and replace rejected Work as required by Engineer in accordance with Paragraph 13.06.A, or if Contractor fails to perform the Work in accordance with the Contract Documents, or if Contractor fails to comply with any other provision of the Contract Documents, Owner may, after seven days written notice to Contractor, correct, or remedy any such deficiency.

Copyright © 2007 National Society of Professional Engineers for EJCDC. All rights reserved.

B. In exercising the rights and remedies under this Paragraph 13.09, Owner shall proceed expeditiously. In connection with such corrective or remedial action, Owner may exclude Contractor from all or part of the Site, take possession of all or part of the Work and suspend Contractor's services related thereto, take possession of Contractor's tools, appliances, construction equipment and machinery at the Site, and incorporate in the Work all materials and equipment stored at the Site or for which Owner has paid Contractor but which are stored elsewhere. Contractor shall allow Owner, Owner's representatives, agents and employees, Owner's other contractors, and Engineer and Engineer's consultants access to the Site to enable Owner to exercise the rights and remedies under this Paragraph.

C. All claims, costs, losses, and damages (including but not limited to all fees and charges of engineers, architects, attorneys, and other professionals and all court or arbitration or other dispute resolution costs) incurred or sustained by Owner in exercising the rights and remedies under this Paragraph 13.09 will be charged against Contractor, and a Change Order will be issued incorporating the necessary revisions in the Contract Documents with respect to the Work; and Owner shall be entitled to an appropriate decrease in the Contract Price. If the parties are unable to agree as to the amount of the adjustment, Owner may make a Claim therefor as provided in Paragraph 10.05. Such claims, costs, losses and damages will include but not be limited to all costs of repair, or replacement of work of others destroyed or damaged by correction, removal, or replacement of Contractor's defective Work.

D. Contractor shall not be allowed an extension of the Contract Times because of any delay in the performance of the Work attributable to the exercise by Owner of Owner's rights and remedies under this Paragraph 13.09.

ARTICLE 14 – PAYMENTS TO CONTRACTOR AND COMPLETION

14.01 *Schedule of Values*

A. The Schedule of Values established as provided in Paragraph 2.07.A will serve as the basis for progress payments and will be incorporated into a form of Application for Payment acceptable to Engineer. Progress payments on account of Unit Price Work will be based on the number of units completed.

14.02 *Progress Payments*

A. *Applications for Payments:*

1. At least 20 days before the date established in the Agreement for each progress payment (but not more often than once a month), Contractor shall submit to Engineer for review an Application for Payment filled out and signed by Contractor covering the Work completed as of the date of the Application and accompanied by such supporting documentation as is required by the Contract Documents. If payment is requested on the basis of materials and equipment not incorporated in the Work but delivered and suitably stored at the Site or at another location agreed to in writing, the Application for Payment shall also be accompanied by a bill of sale, invoice, or other documentation warranting that Owner has received the materials and equipment free and clear of all Liens and evidence that the materials and equipment are covered by appropriate property insurance or other

Copyright © 2007 National Society of Professional Engineers for EJCDC. All rights reserved.

arrangements to protect Owner's interest therein, all of which must be satisfactory to Owner.

2. Beginning with the second Application for Payment, each Application shall include an affidavit of Contractor stating that all previous progress payments received on account of the Work have been applied on account to discharge Contractor's legitimate obligations associated with prior Applications for Payment.

3. The amount of retainage with respect to progress payments will be as stipulated in the Agreement.

B. *Review of Applications:*

1. Engineer will, within 10 days after receipt of each Application for Payment, either indicate in writing a recommendation of payment and present the Application to Owner or return the Application to Contractor indicating in writing Engineer's reasons for refusing to recommend payment. In the latter case, Contractor may make the necessary corrections and resubmit the Application.

2. Engineer's recommendation of any payment requested in an Application for Payment will constitute a representation by Engineer to Owner, based on Engineer's observations of the executed Work as an experienced and qualified design professional, and on Engineer's review of the Application for Payment and the accompanying data and schedules, that to the best of Engineer's knowledge, information and belief:

   a. the Work has progressed to the point indicated;

   b. the quality of the Work is generally in accordance with the Contract Documents (subject to an evaluation of the Work as a functioning whole prior to or upon Substantial Completion, the results of any subsequent tests called for in the Contract Documents, a final determination of quantities and classifications for Unit Price Work under Paragraph 9.07, and any other qualifications stated in the recommendation); and

   c. the conditions precedent to Contractor's being entitled to such payment appear to have been fulfilled in so far as it is Engineer's responsibility to observe the Work.

3. By recommending any such payment Engineer will not thereby be deemed to have represented that:

   a. inspections made to check the quality or the quantity of the Work as it has been performed have been exhaustive, extended to every aspect of the Work in progress, or involved detailed inspections of the Work beyond the responsibilities specifically assigned to Engineer in the Contract Documents; or

   b. there may not be other matters or issues between the parties that might entitle Contractor to be paid additionally by Owner or entitle Owner to withhold payment to Contractor.

Copyright © 2007 National Society of Professional Engineers for EJCDC. All rights reserved.

4. Neither Engineer's review of Contractor's Work for the purposes of recommending payments nor Engineer's recommendation of any payment, including final payment, will impose responsibility on Engineer:

    a. to supervise, direct, or control the Work, or

    b. for the means, methods, techniques, sequences, or procedures of construction, or the safety precautions and programs incident thereto, or

    c. for Contractor's failure to comply with Laws and Regulations applicable to Contractor's performance of the Work, or

    d. to make any examination to ascertain how or for what purposes Contractor has used the moneys paid on account of the Contract Price, or

    e. to determine that title to any of the Work, materials, or equipment has passed to Owner free and clear of any Liens.

5. Engineer may refuse to recommend the whole or any part of any payment if, in Engineer's opinion, it would be incorrect to make the representations to Owner stated in Paragraph 14.02.B.2. Engineer may also refuse to recommend any such payment or, because of subsequently discovered evidence or the results of subsequent inspections or tests, revise or revoke any such payment recommendation previously made, to such extent as may be necessary in Engineer's opinion to protect Owner from loss because:

    a. the Work is defective, or completed Work has been damaged, requiring correction or replacement;

    b. the Contract Price has been reduced by Change Orders;

    c. Owner has been required to correct defective Work or complete Work in accordance with Paragraph 13.09; or

    d. Engineer has actual knowledge of the occurrence of any of the events enumerated in Paragraph 15.02.A.

C. *Payment Becomes Due:*

1. Ten days after presentation of the Application for Payment to Owner with Engineer's recommendation, the amount recommended will (subject to the provisions of Paragraph 14.02.D) become due, and when due will be paid by Owner to Contractor.

D. *Reduction in Payment:*

1. Owner may refuse to make payment of the full amount recommended by Engineer because:

    a. claims have been made against Owner on account of Contractor's performance or furnishing of the Work;

Copyright © 2007 National Society of Professional Engineers for EJCDC. All rights reserved.

b. Liens have been filed in connection with the Work, except where Contractor has delivered a specific bond satisfactory to Owner to secure the satisfaction and discharge of such Liens;

c. there are other items entitling Owner to a set-off against the amount recommended; or

d. Owner has actual knowledge of the occurrence of any of the events enumerated in Paragraphs 14.02.B.5.a through 14.02.B.5.c or Paragraph 15.02.A.

2. If Owner refuses to make payment of the full amount recommended by Engineer, Owner will give Contractor immediate written notice (with a copy to Engineer) stating the reasons for such action and promptly pay Contractor any amount remaining after deduction of the amount so withheld. Owner shall promptly pay Contractor the amount so withheld, or any adjustment thereto agreed to by Owner and Contractor, when Contractor remedies the reasons for such action.

3. Upon a subsequent determination that Owner's refusal of payment was not justified, the amount wrongfully withheld shall be treated as an amount due as determined by Paragraph 14.02.C.1 and subject to interest as provided in the Agreement.

14.03 *Contractor's Warranty of Title*

A. Contractor warrants and guarantees that title to all Work, materials, and equipment covered by any Application for Payment, whether incorporated in the Project or not, will pass to Owner no later than the time of payment free and clear of all Liens.

14.04 *Substantial Completion*

A. When Contractor considers the entire Work ready for its intended use Contractor shall notify Owner and Engineer in writing that the entire Work is substantially complete (except for items specifically listed by Contractor as incomplete) and request that Engineer issue a certificate of Substantial Completion.

B. Promptly after Contractor's notification, Owner, Contractor, and Engineer shall make an inspection of the Work to determine the status of completion. If Engineer does not consider the Work substantially complete, Engineer will notify Contractor in writing giving the reasons therefor.

C. If Engineer considers the Work substantially complete, Engineer will deliver to Owner a tentative certificate of Substantial Completion which shall fix the date of Substantial Completion. There shall be attached to the certificate a tentative list of items to be completed or corrected before–final payment. Owner shall have seven days after receipt of the tentative certificate during which to make written objection to Engineer as to any provisions of the certificate or attached list. If, after considering such objections, Engineer concludes that the Work is not substantially complete, Engineer will, within 14 days after submission of the tentative certificate to Owner, notify Contractor in writing, stating the reasons therefor. If, after consideration of Owner's objections, Engineer considers the Work substantially complete, Engineer will, within said 14 days, execute and deliver to Owner and Contractor a definitive

Copyright © 2007 National Society of Professional Engineers for EJCDC. All rights reserved.

certificate of Substantial Completion (with a revised tentative list of items to be completed or corrected) reflecting such changes from the tentative certificate as Engineer believes justified after consideration of any objections from Owner.

D. At the time of delivery of the tentative certificate of Substantial Completion, Engineer will deliver to Owner and Contractor a written recommendation as to division of responsibilities pending final payment between Owner and Contractor with respect to security, operation, safety, and protection of the Work, maintenance, heat, utilities, insurance, and warranties and guarantees. Unless Owner and Contractor agree otherwise in writing and so inform Engineer in writing prior to Engineer's issuing the definitive certificate of Substantial Completion, Engineer's aforesaid recommendation will be binding on Owner and Contractor until final payment.

E. Owner shall have the right to exclude Contractor from the Site after the date of Substantial Completion subject to allowing Contractor reasonable access to remove its property and complete or correct items on the tentative list.

14.05 *Partial Utilization*

A. Prior to Substantial Completion of all the Work, Owner may use or occupy any substantially completed part of the Work which has specifically been identified in the Contract Documents, or which Owner, Engineer, and Contractor agree constitutes a separately functioning and usable part of the Work that can be used by Owner for its intended purpose without significant interference with Contractor's performance of the remainder of the Work, subject to the following conditions:

1. Owner at any time may request Contractor in writing to permit Owner to use or occupy any such part of the Work which Owner believes to be ready for its intended use and substantially complete. If and when Contractor agrees that such part of the Work is substantially complete, Contractor, Owner, and Engineer will follow the procedures of Paragraph 14.04.A through D for that part of the Work.

2. Contractor at any time may notify Owner and Engineer in writing that Contractor considers any such part of the Work ready for its intended use and substantially complete and request Engineer to issue a certificate of Substantial Completion for that part of the Work.

3. Within a reasonable time after either such request, Owner, Contractor, and Engineer shall make an inspection of that part of the Work to determine its status of completion. If Engineer does not consider that part of the Work to be substantially complete, Engineer will notify Owner and Contractor in writing giving the reasons therefor. If Engineer considers that part of the Work to be substantially complete, the provisions of Paragraph 14.04 will apply with respect to certification of Substantial Completion of that part of the Work and the division of responsibility in respect thereof and access thereto.

4. No use or occupancy or separate operation of part of the Work may occur prior to compliance with the requirements of Paragraph 5.10 regarding property insurance.

Copyright © 2007 National Society of Professional Engineers for EJCDC. All rights reserved.

14.06 *Final Inspection*

A. Upon written notice from Contractor that the entire Work or an agreed portion thereof is complete, Engineer will promptly make a final inspection with Owner and Contractor and will notify Contractor in writing of all particulars in which this inspection reveals that the Work is incomplete or defective. Contractor shall immediately take such measures as are necessary to complete such Work or remedy such deficiencies.

14.07 *Final Payment*

A. *Application for Payment:*

1. After Contractor has, in the opinion of Engineer, satisfactorily completed all corrections identified during the final inspection and has delivered, in accordance with the Contract Documents, all maintenance and operating instructions, schedules, guarantees, bonds, certificates or other evidence of insurance, certificates of inspection, marked-up record documents (as provided in Paragraph 6.12), and other documents, Contractor may make application for final payment following the procedure for progress payments.

2. The final Application for Payment shall be accompanied (except as previously delivered) by:

   a. all documentation called for in the Contract Documents, including but not limited to the evidence of insurance required by Paragraph 5.04.B.6;

   b. consent of the surety, if any, to final payment;

   c. a list of all Claims against Owner that Contractor believes are unsettled; and

   d. complete and legally effective releases or waivers (satisfactory to Owner) of all Lien rights arising out of or Liens filed in connection with the Work.

3. In lieu of the releases or waivers of Liens specified in Paragraph 14.07.A.2 and as approved by Owner, Contractor may furnish receipts or releases in full and an affidavit of Contractor that: (i) the releases and receipts include all labor, services, material, and equipment for which a Lien could be filed; and (ii) all payrolls, material and equipment bills, and other indebtedness connected with the Work for which Owner might in any way be responsible, or which might in any way result in liens or other burdens on Owner's property, have been paid or otherwise satisfied. If any Subcontractor or Supplier fails to furnish such a release or receipt in full, Contractor may furnish a bond or other collateral satisfactory to Owner to indemnify Owner against any Lien.

B. *Engineer's Review of Application and Acceptance:*

1. If, on the basis of Engineer's observation of the Work during construction and final inspection, and Engineer's review of the final Application for Payment and accompanying documentation as required by the Contract Documents, Engineer is satisfied that the Work has been completed and Contractor's other obligations under the Contract Documents have been fulfilled, Engineer will, within ten days after receipt of the final Application for

Copyright © 2007 National Society of Professional Engineers for EJCDC. All rights reserved.

Payment, indicate in writing Engineer's recommendation of payment and present the Application for Payment to Owner for payment. At the same time Engineer will also give written notice to Owner and Contractor that the Work is acceptable subject to the provisions of Paragraph 14.09. Otherwise, Engineer will return the Application for Payment to Contractor, indicating in writing the reasons for refusing to recommend final payment, in which case Contractor shall make the necessary corrections and resubmit the Application for Payment.

C. *Payment Becomes Due:*

1. Thirty days after the presentation to Owner of the Application for Payment and accompanying documentation, the amount recommended by Engineer, less any sum Owner is entitled to set off against Engineer's recommendation, including but not limited to liquidated damages, will become due and will be paid by Owner to Contractor.

14.08 *Final Completion Delayed*

A. If, through no fault of Contractor, final completion of the Work is significantly delayed, and if Engineer so confirms, Owner shall, upon receipt of Contractor's final Application for Payment (for Work fully completed and accepted) and recommendation of Engineer, and without terminating the Contract, make payment of the balance due for that portion of the Work fully completed and accepted. If the remaining balance to be held by Owner for Work not fully completed or corrected is less than the retainage stipulated in the Agreement, and if bonds have been furnished as required in Paragraph 5.01, the written consent of the surety to the payment of the balance due for that portion of the Work fully completed and accepted shall be submitted by Contractor to Engineer with the Application for such payment. Such payment shall be made under the terms and conditions governing final payment, except that it shall not constitute a waiver of Claims.

14.09 *Waiver of Claims*

A. The making and acceptance of final payment will constitute:

1. a waiver of all Claims by Owner against Contractor, except Claims arising from unsettled Liens, from defective Work appearing after final inspection pursuant to Paragraph 14.06, from failure to comply with the Contract Documents or the terms of any special guarantees specified therein, or from Contractor's continuing obligations under the Contract Documents; and

2. a waiver of all Claims by Contractor against Owner other than those previously made in accordance with the requirements herein and expressly acknowledged by Owner in writing as still unsettled.

Copyright © 2007 National Society of Professional Engineers for EJCDC. All rights reserved.

ARTICLE 15 – SUSPENSION OF WORK AND TERMINATION

15.01 *Owner May Suspend Work*

A. At any time and without cause, Owner may suspend the Work or any portion thereof for a period of not more than 90 consecutive days by notice in writing to Contractor and Engineer which will fix the date on which Work will be resumed. Contractor shall resume the Work on the date so fixed. Contractor shall be granted an adjustment in the Contract Price or an extension of the Contract Times, or both, directly attributable to any such suspension if Contractor makes a Claim therefor as provided in Paragraph 10.05.

15.02 *Owner May Terminate for Cause*

A. The occurrence of any one or more of the following events will justify termination for cause:

1. Contractor's persistent failure to perform the Work in accordance with the Contract Documents (including, but not limited to, failure to supply sufficient skilled workers or suitable materials or equipment or failure to adhere to the Progress Schedule established under Paragraph 2.07 as adjusted from time to time pursuant to Paragraph 6.04);

2. Contractor's disregard of Laws or Regulations of any public body having jurisdiction;

3. Contractor's repeated disregard of the authority of Engineer; or

4. Contractor's violation in any substantial way of any provisions of the Contract Documents.

B. If one or more of the events identified in Paragraph 15.02.A occur, Owner may, after giving Contractor (and surety) seven days written notice of its intent to terminate the services of Contractor:

1. exclude Contractor from the Site, and take possession of the Work and of all Contractor's tools, appliances, construction equipment, and machinery at the Site, and use the same to the full extent they could be used by Contractor (without liability to Contractor for trespass or conversion);

2. incorporate in the Work all materials and equipment stored at the Site or for which Owner has paid Contractor but which are stored elsewhere; and

3. complete the Work as Owner may deem expedient.

C. If Owner proceeds as provided in Paragraph 15.02.B, Contractor shall not be entitled to receive any further payment until the Work is completed. If the unpaid balance of the Contract Price exceeds all claims, costs, losses, and damages (including but not limited to all fees and charges of engineers, architects, attorneys, and other professionals and all court or arbitration or other dispute resolution costs) sustained by Owner arising out of or relating to completing the Work, such excess will be paid to Contractor. If such claims, costs, losses, and damages exceed such unpaid balance, Contractor shall pay the difference to Owner. Such claims, costs, losses, and damages incurred by Owner will be reviewed by Engineer as to their reasonableness and, when so approved by Engineer, incorporated in a Change Order. When exercising any rights or

Copyright © 2007 National Society of Professional Engineers for EJCDC. All rights reserved.

remedies under this Paragraph, Owner shall not be required to obtain the lowest price for the Work performed.

D. Notwithstanding Paragraphs 15.02.B and 15.02.C, Contractor's services will not be terminated if Contractor begins within seven days of receipt of notice of intent to terminate to correct its failure to perform and proceeds diligently to cure such failure within no more than 30 days of receipt of said notice.

E. Where Contractor's services have been so terminated by Owner, the termination will not affect any rights or remedies of Owner against Contractor then existing or which may thereafter accrue. Any retention or payment of moneys due Contractor by Owner will not release Contractor from liability.

F. If and to the extent that Contractor has provided a performance bond under the provisions of Paragraph 5.01.A, the termination procedures of that bond shall supersede the provisions of Paragraphs 15.02.B and 15.02.C.

15.03 *Owner May Terminate For Convenience*

A. Upon seven days written notice to Contractor and Engineer, Owner may, without cause and without prejudice to any other right or remedy of Owner, terminate the Contract. In such case, Contractor shall be paid for (without duplication of any items):

1. completed and acceptable Work executed in accordance with the Contract Documents prior to the effective date of termination, including fair and reasonable sums for overhead and profit on such Work;

2. expenses sustained prior to the effective date of termination in performing services and furnishing labor, materials, or equipment as required by the Contract Documents in connection with uncompleted Work, plus fair and reasonable sums for overhead and profit on such expenses;

3. all claims, costs, losses, and damages (including but not limited to all fees and charges of engineers, architects, attorneys, and other professionals and all court or arbitration or other dispute resolution costs) incurred in settlement of terminated contracts with Subcontractors, Suppliers, and others; and

4. reasonable expenses directly attributable to termination.

B. Contractor shall not be paid on account of loss of anticipated profits or revenue or other economic loss arising out of or resulting from such termination.

15.04 *Contractor May Stop Work or Terminate*

A. If, through no act or fault of Contractor, (i) the Work is suspended for more than 90 consecutive days by Owner or under an order of court or other public authority, or (ii) Engineer fails to act on any Application for Payment within 30 days after it is submitted, or (iii) Owner fails for 30 days to pay Contractor any sum finally determined to be due, then Contractor may,

Copyright © 2007 National Society of Professional Engineers for EJCDC. All rights reserved.

upon seven days written notice to Owner and Engineer, and provided Owner or Engineer do not remedy such suspension or failure within that time, terminate the Contract and recover from Owner payment on the same terms as provided in Paragraph 15.03.

B. In lieu of terminating the Contract and without prejudice to any other right or remedy, if Engineer has failed to act on an Application for Payment within 30 days after it is submitted, or Owner has failed for 30 days to pay Contractor any sum finally determined to be due, Contractor may, seven days after written notice to Owner and Engineer, stop the Work until payment is made of all such amounts due Contractor, including interest thereon. The provisions of this Paragraph 15.04 are not intended to preclude Contractor from making a Claim under Paragraph 10.05 for an adjustment in Contract Price or Contract Times or otherwise for expenses or damage directly attributable to Contractor's stopping the Work as permitted by this Paragraph.

ARTICLE 16 – DISPUTE RESOLUTION

16.01 *Methods and Procedures*

A. Either Owner or Contractor may request mediation of any Claim submitted to Engineer for a decision under Paragraph 10.05 before such decision becomes final and binding. The mediation will be governed by the Construction Industry Mediation Rules of the American Arbitration Association in effect as of the Effective Date of the Agreement. The request for mediation shall be submitted in writing to the American Arbitration Association and the other party to the Contract. Timely submission of the request shall stay the effect of Paragraph 10.05.E.

B. Owner and Contractor shall participate in the mediation process in good faith. The process shall be concluded within 60 days of filing of the request. The date of termination of the mediation shall be determined by application of the mediation rules referenced above.

C. If the Claim is not resolved by mediation, Engineer's action under Paragraph 10.05.C or a denial pursuant to Paragraphs 10.05.C.3 or 10.05.D shall become final and binding 30 days after termination of the mediation unless, within that time period, Owner or Contractor:

1. elects in writing to invoke any dispute resolution process provided for in the Supplementary Conditions; or

2. agrees with the other party to submit the Claim to another dispute resolution process; or

3. gives written notice to the other party of the intent to submit the Claim to a court of competent jurisdiction.

ARTICLE 17 – MISCELLANEOUS

17.01 *Giving Notice*

A. Whenever any provision of the Contract Documents requires the giving of written notice, it will be deemed to have been validly given if:

Copyright © 2007 National Society of Professional Engineers for EJCDC. All rights reserved.

1. delivered in person to the individual or to a member of the firm or to an officer of the corporation for whom it is intended; or

2. delivered at or sent by registered or certified mail, postage prepaid, to the last business address known to the giver of the notice.

17.02 *Computation of Times*

A. When any period of time is referred to in the Contract Documents by days, it will be computed to exclude the first and include the last day of such period. If the last day of any such period falls on a Saturday or Sunday or on a day made a legal holiday by the law of the applicable jurisdiction, such day will be omitted from the computation.

17.03 *Cumulative Remedies*

A. The duties and obligations imposed by these General Conditions and the rights and remedies available hereunder to the parties hereto are in addition to, and are not to be construed in any way as a limitation of, any rights and remedies available to any or all of them which are otherwise imposed or available by Laws or Regulations, by special warranty or guarantee, or by other provisions of the Contract Documents. The provisions of this Paragraph will be as effective as if repeated specifically in the Contract Documents in connection with each particular duty, obligation, right, and remedy to which they apply.

17.04 *Survival of Obligations*

A. All representations, indemnifications, warranties, and guarantees made in, required by, or given in accordance with the Contract Documents, as well as all continuing obligations indicated in the Contract Documents, will survive final payment, completion, and acceptance of the Work or termination or completion of the Contract or termination of the services of Contractor.

17.05 *Controlling Law*

A. This Contract is to be governed by the law of the state in which the Project is located.

17.06 *Headings*

A. Article and paragraph headings are inserted for convenience only and do not constitute parts of these General Conditions.

Copyright © 2007 National Society of Professional Engineers for EJCDC. All rights reserved.

Supplementary Conditions

These Supplementary Conditions amend or supplement the Standard General Conditions of the Construction Contract, EJCDC C-700 (2007 Edition). All provisions which are not so amended or supplemented remain in full force and effect.

The terms used in these Supplementary Conditions have the meanings stated in the General Conditions. Additional terms used in these Supplementary Conditions have the meanings stated below, which are applicable to both the singular and plural thereof.

The address system used in these Supplementary Conditions is the same as the address system used in the General Conditions, with the prefix "SC" added thereto.

SC-4.02 *Subsurface and Physical Conditions*

SC-4.02 Add the following new paragraphs immediately after Paragraph 4.02.B:

C. The following reports of explorations and tests of subsurface conditions at or contiguous to the Site are known to Owner:

1. Report prepared by Howland Engineering entitled: Roadway at Espejo Gates – County Line Road. The “technical data” contained in such report upon which Contractor may rely is geotechnical data.

D. The reports and drawings identified above are not part of the Contract Documents, but the “technical data” contained therein upon which Contractor may rely, as expressly identified and established above, are incorporated in the Contract Documents by reference. Contractor is not entitled to rely upon any other information and data known to or identified by Owner or Engineer.

E. Copies of reports and drawings identified in SC-4.02.C and SC-4.02.D that are not included with the Bidding Documents may be examined at S&B Infrastructure, Laredo office during regular business hours.

Copyright © 2007 National Society of Professional Engineers for EJCDC. All rights reserved.

Contractor's Application for Payment No. _____

	Application Period:	Application Date:
To (Owner):	From (Contractor):	Via (Engineer):
Project:	Contract:	
Owner's Contract No.:	Contractor's Project No.:	Engineer's Project No.:

Application For Payment

Change Order Summary

Approved Change Orders		
Number	Additions	Deductions
TOTALS		
NET CHANGE BY CHANGE ORDERS		

1. ORIGINAL CONTRACT PRICE..... $ _____

2. Net change by Change Orders..... $ _____

3. Current Contract Price (Line 1 ± 2)..... $ _____

4. TOTAL COMPLETED AND STORED TO DATE
(Column F on Progress Estimate)..... $ _____

5. RETAINAGE:

a. X _____ Work Completed..... $ _____

b. X _____ Stored Material..... $ _____

c. Total Retainage (Line 5a + Line 5b)..... $ _____

6. AMOUNT ELIGIBLE TO DATE (Line 4 - Line 5c)..... $ _____

7. LESS PREVIOUS PAYMENTS (Line 6 from prior Application)..... $ _____

8. AMOUNT DUE THIS APPLICATION..... $ _____

9. BALANCE TO FINISH, PLUS RETAINAGE
(Column G on Progress Estimate + Line 5 above)..... $ _____

Contractor's Certification

The undersigned Contractor certifies that to the best of its knowledge: (1) all previous progress payments received from Owner on account of Work done under the Contract have been applied on account to discharge Contractor's legitimate obligations incurred in connection with Work covered by prior Applications for Payment; (2) title of all Work, materials and equipment incorporated in said Work or otherwise listed in or covered by this Application for Payment will pass to Owner at time of payment free and clear of all Liens, security interests and encumbrances (except such as are covered by a Bond acceptable to Owner indemnifying Owner against any such Liens, security interest or encumbrances); and (3) all Work covered by this Application for Payment is in accordance with the Contract Documents and is not defective.

By:	Date:

Payment of: $ _____
(Line 8 or other - attach explanation of the other amount)

is recommended by: _____ _____
(Engineer) (Date)

Payment of: $ _____
(Line 8 or other - attach explanation of the other amount)

is approved by: _____ _____
(Owner) (Date)

Approved by: _____ _____
Funding Agency (if applicable) (Date)

Endorsed by the Construction Specifications Institute.

© 2007 National Society of Professional Engineers for EJCDC. All rights reserved.

Progress Estimate

Contractor's Application

For (contract):	Application Number:
Application Period:	Application Date:

A		B	Work Completed		E	F		G
Item		Scheduled Value	C	D	Materials Presently Stored (not in C or D)	Total Completed and Stored to Date (C + D + E)	% (F) B	Balance to Finish (B - F)
Specification Section No.	Description		From Previous Application (C+D)	This Period				
	Totals							

© 2007 National Society of Professional Engineers for EJCDC. All rights reserved.

Progress Estimate

Contractor's Application

For (contract):	Application Number:
Application Period:	Application Date:

A				B	C	D	E	F		
Item		Bid Quantity	Unit Price	Bid Value	Estimated Quantity Installed	Value	Materials Presently Stored (not in C)	Total Completed and Stored to Date (D + E)	% (F) B	Balance to Finish (B - F)
Bid Item No.	Description									
	Totals									

© 2007 National Society of Professional Engineers for EJCDC. All rights reserved.

Stored Material Summary

Contractor's Application

For (contract):	Application Number:
Application Period:	Application Date:

A	B	C	D		E		F		G
Invoice No.	Shop Drawing Transmittal No.	Materials Description	Stored Previously		Stored this Month		Incorporated in Work		Materials Remaining in Storage ($) (D + E - F)
			Date (Month/Year)	Amount ($)	Amount ($)	Subtotal	Date (Month/Year)	Amount ($)	
		Totals							

© 2007 National Society of Professional Engineers for EJCDC. All rights reserved.

Change Order

No. _____

Date of Issuance: _____ Effective Date: _____

Project: Webb County Espejo Gates Roadway Improvements	Owner: Webb County	Owner's Contract No.:
Contract:		Date of Contract:
Contractor:		Engineer's Project No.: U2338

The Contract Documents are modified as follows upon execution of this Change Order:

Description:

Attachments (list documents supporting change):

CHANGE IN CONTRACT PRICE:	CHANGE IN CONTRACT TIMES:
Original Contract Price: $_____	Original Contract Times: ☐ Working days ☐ Calendar days Substantial completion (days or date): _____ Ready for final payment (days or date): _____
[Increase] [Decrease] from previously approved Change Orders No. _____ to No. $_____	[Increase] [Decrease] from previously approved Change Orders Substantial completion (days): _____ Ready for final payment (days): _____
Contract Price prior to this Change Order: $_____	Contract Times prior to this Change Order: Substantial completion (days or date): _____ Ready for final payment (days or date): _____
[Increase] [Decrease] of this Change Order: $_____	[Increase] [Decrease] of this Change Order: Substantial completion (days or date): _____ Ready for final payment (days or date): _____
Contract Price incorporating this Change Order: $_____	Contract Times with all approved Change Orders: Substantial completion (days or date): _____ Ready for final payment (days or date): _____

RECOMMENDED:	ACCEPTED:	ACCEPTED:
By: _____	By: _____	By: _____
Engineer (Authorized Signature)	Owner (Authorized Signature)	Contractor (Authorized
Date: _____	Date: _____	Date: _____

Approved by Funding Agency (if applicable):

_____ Date: _____

Document 00931
(EJCDC C-931)

REQUEST FOR INFORMATION

1. PROJECT No.: U2338
2. RFI No.: _____
3. PROJECT NAME: Webb County Espejo Gates Roadway Improvements Project
4. CONTRACTOR: _____
5. CONTRACT No.: _____
6. SPECIFICATION Nos.: _____
7. DRAWING Nos.: _____
8. RESPONSE CODE: [_] CRITICAL [_] ROUTINE 9.DATE RESPONSE REQUIRED: _____
10. INFORMATION REQUIRED:

11. _____ _____
CONTRACTOR (Signature) TITLE DATE

12. RESPONSE:

13. _____ _____
PROJECT MANAGER (Signature) DATE

14. If Contractor believes the response given in Item 12 requires an adjustment in Contract Price or Contract Time, Contractor shall submit a timely proposal so as not to delay Contractor's Work in accordance with General Conditions, Article 10 - Changes in the Work.

END OF DOCUMENT

Document 00940

WORK CHANGE DIRECTIVE / WCD No. _____

PROJECT: Webb County Espejo Gates Roadway Improvements Project

CONTRACT No.: _____ PROJECT No.: U2338

TO: [*Contractor's Company Name*]

Contractor and [*Contractor's Address*]

Address for Written Notice _____

REFERENCE RFIs/RFPs: _____

You are hereby directed to make the following changes in the Work, as described below and specified or shown on attachments, if applicable.

1.01 DESCRIPTION OF CHANGES

A. Brief description of changes in the Work:

_____

_____

_____

B. Justification for change(s):

_____

_____

_____

1.02 PROPOSED ADJUSTMENTS

A. Contract Price (Check one):

[ ] Lump sum [increase / decrease] of $_____.

[ ] Unit Price of $_____ per _____.

[ ] As provided in subparagraph _____ of General Conditions.

[ ] As follows:

B. Contract Time: Contract Time is proposed to [be adjusted / remain unchanged].

Proposed adjustment, if any, is [an increase / a decrease] of _____ days.

1.03 NOTICE TO PROCEED BY THE ENGINEER

Signature by Engineer indicates notice to proceed to Contractor for the described work and outlines proposed method of adjustment in Contract Price and Contract Time.

Project Manager	Date	[*Intermediate Authority, if needed*]	Date
[*Intermediate Authority, if needed*]	Date	City Engineer	Date

1.04 ACCEPTANCE BY CONTRACTOR

Signature by Contractor indicates Contractor's agreement with the above proposed adjustments in Contract Price and Contract Time.

Contractor Signature and Title	Date

END OF DOCUMENT

cc: [*Design Consultant*], [*Owning Dept. Director*], [*Other Copy Addees*], [*File(s)*]

WORK CHANGE DIRECTIVE

EXECUTIVE SUMMARY

WCD No. _____ Contract No.: _____ Proj. No.: _____

1.01	CONTRACT PRICE SUMMARY	DOLLAR AMOUNT	PERCENT
A.	Original Contract Price	$0.00	100.00%
B.	Previous Change Orders	$0.00	
C.	This Work Change Directive	$0.00	
D.	Revised Contract Price	$0.00	
E.	Projected Contract Modifications*		
F.	Projected Contract Price		

Date of Commencement of the Work: _____

1.02	CONTRACT TIME SUMMARY	DURATION	COMPLETION DATE
A.	Original Contract Time	Days	
B.	Previous Change Orders	0 Days	
C.	This Work Change Directive	0 Days	
D.	Revised Contract Time	0 Days	
E.	Projected Contract Modifications*		
F.	Projected Contract Time		

1.03 TOTAL VALUE OF INCREASES OUTSIDE OF GENERAL SCOPE OF WORK

A. Including this Work Change Directive, the following table is provided to track conditions related to Paragraph 7.1.2.3 of Document 00700 - General Conditions.

WCD & C.O. Nos.	AMOUNT ADDED	PERCENT OF ORIGINAL CONTRACT PRICE
[1]	[$0.00]	[0%]
TOTALS	$0.00	0.0%

* Based on approved WCDs not yet included in Change Orders and Change Orders not yet issued.

END OF SUMMARY

MINOR CHANGE IN THE WORK

Document 00942

MINOR CHANGE IN THE WORK / M.C.W. No.: _____

PROJECT: Webb County Espejo Gates Roadway Improvements Project

CONTRACT No.: _____ PROJECT No.: U2338

TO: [*Contractor's Company Name*]

Contractor and [*Contractor's Address*]

Address for Written Notice _____

1.01 DESCRIPTION OF CHANGES

1.02 JUSTIFICATION FOR CHANGES

1.03 ACCEPTANCE BY CONTRACTOR

A. Contractor agrees to perform change(s) included in this Minor Change in the Work and that it does not involve any adjustment in Contract Price or Contract Time.

_____ _____
Contractor Signature and Title Date

1.04 ACCEPTANCE BY THE ENGINEER

_____ _____
Project Manager Date

_____ _____
[*Intermediate Authority*] Date

_____ _____
City Engineer Date

TEMPORARY CONSTRUCTION SIGN

WEBB COUNTY, TEXAS

"Espejo Gates Roadway Improvements Project"

Honorable Tano E. Tijerina, County Judge

Frank Sciaraffa County Commissioner Pct. 1
Rosaura "Wawi" Tijerina - County Commissioner Pct. 2
John Galo County Commissioner Pct. 4
Jaime Canales County Commissioner Pct. 4

Luis Perez Garcia III, P.E., C.F.M, County Engineer
(956) 523-4055

S&B Infrastructure, Ltd. — Contractor's Name
2120 Blaine Street, Suite 100 — Address
Laredo, TX, 78043 — City, State, Zip Code
956-568-2561 — Telephone Number

NOTE: Signs are to be installed in ground on 4" x 4" posts
Blue borders
White background
Black letter
Two (2) project signs are required - 4' x 8' x ¾" thick
Plywood Panel (APA Rated A-B grade-exterior)

CONTRACTOR TO REMOVE SIGNS UPON COMPLETION OF PROJECT

ENGINEER SEAL

Project: Espejo Gates Roadway Improvements

County: Webb

STATE OF TEXAS
JASON P. GARZA
108601
LICENSED
PROFESSIONAL ENGINEER

6-8-2016

The enclosed Texas Department of Transportation Specifications (2014), Special Specifications and Special Provisions in this document have been selected by me, or under my responsible supervision as being applicable to this project. Alteration of a sealed document without proper notification to the responsible engineer is an offense under the Texas Engineering Practice Act.

WEBB COUNTY

ESPEJO GATES ROADWAY IMPROVEMENTS PROJECT

SPECIAL PROVISIONS

Preface:

The "Standard Specifications for Construction and Maintenance of Highways, Streets, and Bridges" of the Texas Department of Transportation, 2014, as amended and augmented by the Supplemental Specifications following, shall govern the performance of the Contract. These specifications hereby are made a part of the Contract as fully and with the same effect as if set forth at length herein. In case of conflict between the Suggested Form of Agreement, the Standard General Conditions of the Constructing Contract (including the Supplementary Conditions attached herein) and the Specifications, Special Provisions, and Specifications that follow, then the Terms of the Suggested Form of Agreement and the Standard General Conditions will supersede the language in the Specifications, the Special Provisions, and the Special Specifications.

Attention is directed to the fact that any other documents printed by the Texas Department of Transportation modifying or supplementing said "Standard Specifications", such as Standard Supplemental Specifications, Special Provisions (by the Department), Notice to Bidders, etc. do not form a part of this Contract nor govern its performance, unless specifically so-stated in the Supplemental Specifications herein contained.

References to "Proposal" have been changed to "Bid" in the County's documents for this contract, including many standard TxDOT terms such as "Examination of Site Work and Bid (Proposal)". This shall be accounted for when working contract documents prepared by the County with those standards prepared by TxDOT.

References made to specific section numbers in these Special Provisions, or in any of the various documents which constitute the complete Contract Documents, shall, unless otherwise denoted, be construed as referenced to the corresponding section of the "Standard Specifications" issued by the Texas Department of Transportation in 2014.

WEBB COUNTY

GOVERNING SPECIFICATIONS AND SPECIAL PROVISIONS

ALL SPECIFICATIONS AND SPECIAL PROVISIONS APPLICABLE TO THIS PROJECT ARE IDENTIFIED AS FOLLOWS:

STANDARD SPECIFICATIONS:
ADOPTED BY THE TEXAS DEPARTMENT OF TRANSPORTATION
NOVEMBER 1, 2014
STANDARD SPECIFICATIONS
ARE INCORPORATED INTO THE CONTRACT BY REFERENCE

ITEM 1 ABBREVIATIONS AND DEFINITIONS
ITEM 2 INSTRUCTIONS TO BIDDERS
ITEM 3 AWARD AND EXECUTION OF CONTRACT
ITEM 4 SCOPE OF WORK
ITEM 5 CONTROL OF WORK
ITEM 6 CONTROL OF MATERIALS
ITEM 7 LEGAL RELATIONS AND RESPONSIBILITIES
ITEM 8 PROSECUTION AND PROGRESS
ITEM 9 MEASUREMENT AND PAYMENT
ITEM 100 PREPARING RIGHT OF WAY (103)
ITEM 110 EXCAVATION (132)
ITEM 132 EMBANKMENT (100)(204)(210)(216)(400)
ITEM 164 SEEDING FOR EROSION CONTROL (162)(166)(168)
ITEM 204 SPRINKLING
ITEM 247 FLEXIBLE BASE (105)(204)(210)(216)(520)
ITEM 260 LIME TREATMENT (ROAD-MIXED) (105)(132)(204)(210)(216)(247)(300)(310)(520)
ITEM 310 PRIME COAT (300)(316)
ITEM 340 DENSE-GRADED HOT-MIX ASPHALT (METHOD) (210)(300)(301)(320)(520)(585)
ITEM 360 CONCRETE PAVEMENT (300)(420)(421)(438)(440)(529)(585)
ITEM 422 CONCRETE SUPERSTRUCTURES (420)(421)(440)
ITEM 432 RIPRAP (420)(421)(427)(440)
ITEM 450 RAILING
ITEM 462 CONCRETE BOX CULVERTS AND STORM DRAINS (400)(424)(464)
ITEM 464 REINFORCED CONCRETE PIPE (400)
ITEM 466 HEADWALLS AND WINGWALLS (400)(420)(421)(440)(430)(464)
ITEM 496 REMOVING STRUCTURES
ITEM 500 MOBILIZATION
ITEM 502 BARRICADES, SIGNS, AND TRAFFIC HANDLING
ITEM 506 TEMPORARY EROSION, SEDIMENTATION, AND ENVIRONMENTAL CONTROLS

ITEM 508 CONSTRUCTING DETOURS
ITEM 530 INTERSECTIONS, DRIVEWAYS, AND TURNOUTS (247) (260) (263) (275) (276) (292) (316) (330) (334) (340) (360) (421) (440)
ITEM 540 METAL BEAM GUARD FENCE (421)(445)(529)(542)(544)
ITEM 552 WIRE FENCE (445)(492)
ITEM 644 SMALL ROADSIDE SIGN SUPPORTS AND ASSEMBLIES (421)(440)(441)(442) (445)(634)(636)(643)(656)
ITEM 666 REFLECTORIZED PAVEMENT MARKINGS (316)(318)(662)(677)(678)
ITEM 668 PREFABRICATED PAVEMENT MARKINGS
ITEM 672 RAISED PAVEMENT MARKINGS (677)(678)

SPECIAL PROVISIONS:

SPECIAL PROVISIONS WILL GOVERN AND TAKE PRECEDENCE OVER THE SPECIFICATIONS ENUMERATED HEREON WHEREVER IN CONFLICT THEREWITH

SPECIAL PROVISION TO ITEM 1 (001-001-WC)
SPECIAL PROVISION TO ITEM 2 (002-001-WC)
SPECIAL PROVISION TO ITEM 3 (003-001-WC)
SPECIAL PROVISION TO ITEM 4 (004-001-WC)
SPECIAL PROVISION TO ITEM 5 (005-001-WC)
SPECIAL PROVISION TO ITEM 6 (006-001-WC)
SPECIAL PROVISION TO ITEM 7 (007-001-WC)
SPECIAL PROVISION TO ITEM 8 (008-001-WC)
SPECIAL PROVISION TO ITEM 9 (009-001-WC)
SPECIAL PROVISION TO ITEM 506 (506-003)

SPECIAL SPECIFICATIONS

ITEM 5001 GEOGRID BASE REINFORCEMENT

SPECIAL PROVISION
001-001-WC
Definition of Terms

For this project, Item 001, "Definition of Terms," of the Standard Specifications, is hereby amended with respect to the clauses cited below, and no other clauses or requirements of this Item are waived or changed hereby.

Article 1 is supplemented with the following:

1.0. General Statement:
For this Contract, the Standard Specifications for Construction and Maintenance of Highways, Streets and Bridges, November 1, 2014 (the "Texas Standard Specifications"), all documents referenced therein, and all manuals, bulletins, supplements, specifications, and similar materials issued by the Texas Department of Transportation ("TxDOT"), or any predecessor or successor thereto, which are applicable to this Contract, are hereby modified with respect to the terms cited below and no others are changed hereby.

The term "State", "State of Texas", "State Highway Agency", "State Highway Department Of Texas", "State Department of Highways and Public Transportation", "Texas State Department Of Highways and Public Transportation", "Texas Department of Transportation", "Department", "Texas Turnpike Authority", "State Department of Highways and Public Transportation Commission", “Commission”, "Texas Department of Transportation Commission", "Texas Transportation Commission", or "State Highway Commission", shall, in the use of The Texas Standard Specifications, Special Provisions and Special Specifications and General Notes and Specification Data pertaining thereto, and required contract provisions for Federal-Aid construction contracts, for all work in connection with Webb County projects and all extensions, enlargements, expansions, improvements, and rehabilitations thereto, be deemed to mean Webb County, unless the context clearly indicates a contrary meaning.

Article 1.2 Abbreviations: is supplemented by the following:
WC Webb County

Article 3.14 Award is voided and replaced by the following:
3.14 Award. Webb County’s acceptance of a Contractor’s bid for a proposed contract that authorizes Webb County to enter into a Contract.

Article 3.28. Commission is voided and replaced by the following:
3.28. Commission. Webb County or authorized representative unless the context clearly indicates a contrary intent and meaning.

Article 3.31. Construction Contract is voided and replaced by the following:

3.31. Construction Contract. The agreement between Webb County and the Contractor establishing the obligations of the parties for furnishing of materials and performance of the work prescribed in the Contract Documents.

Article 3.45. Debar (Debarment) is voided and replaced by the following:
3.45. Debar (Debarment). Action taken by Webb County or federal government pursuant to regulation that prohibits a person or company from entering into a Contract, or from participating as a subcontractor, or supplier of materials or equipment used in a highway improvement Contract as defined in Transportation Code, Chapter 223, Subchapter A.

Article 3.47. Department is voided and replaced by the following:
3.47. Department. Webb County, unless the context clearly indicates a contrary intent and meaning.

Article 3.48. Departmental Material Specifications (DMS) is voided and replaced by the following:
3.48. Departmental Material Specifications (DMS). Reference specifications for various materials published by the Texas Department of Transportation Construction Division.

Article 3.50, Disadvantaged Business Enterprise (DBE), is hereby deleted and replaced by the following:
3.50. Disadvantaged Business Enterprise (DBE). A small business certified by any of the Texas DBE Certifying Agencies included in the Texas Unified Certification Program that is 51 % or more owned by 1 or more minorities or women, or in the case of a publicly owned business, at least 51 % of the stock is owned by 1 or more minorities or women; and whose management and daily business operations are controlled by 1 or more of these individuals.

Article 3.54. Engineer is hereby deleted and replaced by the following:
3.54. Engineer. Webb County's Engineer or their duly authorized representative.

Article 3.73. "Letting Official" is hereby deleted and replaced by the following:
3.73. Letting Official. An employee, or authorized representative, of Webb County empowered by Webb County to officially receive bids and close the receipt of bids at a letting.

Article 3.79. Manual of Testing Procedures is voided and replaced by the following:
3.79. Manual of Testing Procedures. Texas Department of Transportation manual outlining test methods and procedures maintained by the Materials and Pavements Section of the Construction Division.

Article 3.98 Prequalification is voided and not replaced.

Article 3.99 Prequalification Statement is voided and not replaced.

Article 3.102. Proposal Form is voided and replaced by the following:
3.102. Proposal Form. The document issued by Webb County for a proposed Contract that includes:

- the specific locations (except for non -site-specific work) and description of the proposed work;
- an estimate of the various quantities and kinds of work to be performed or materials to be furnished;
- a schedule of items for which unit prices are requested;
- the number of working days within which the work is to be completed (or reference to the requirements); and
- the special provisions and special specifications applicable to the proposed Contract.

Article 3. 108. Referee Tests is voided and replaced by the following:
3.108. Referee Tests. Tests requested to resolve differences between Contractor and Engineer test results. The referee laboratory is a mutually agreed to 3rd party commercial laboratory.

Article 3.127. Specifications is voided and replaced by the following:
3.127. Specifications. The general term comprising all the directions, provisions and requirements contained in the Texas Department of Transportation, " Standard Specifications For Construction and Maintenance Of Highways, Streets, And Bridges," 2014 Edition, the Department's or Webb County Special Specifications and Special Provisions, and in any Addenda and Change Orders or Supplemental Agreements that may be issued, all of which are necessary for the proper performance of the Contract.

Article 3.129. State is voided and replaced by the following:
3.129. State. Webb County.

SPECIAL PROVISION
002-001-WC
Instructions to Bidders

For this project, Item 002, "Instruction to Bidders," of the Standard Specifications, is voided and replaced with Document 1, Instructions to Bidders for Construction.

SPECIAL PROVISION
003-001-WC
Award and Execution of Contract

For this project, Item 003, "Award and Execution of Contract," of the Standard Specifications, is voided and replaced with applicable Articles of Document 1, Instructions to Bidders for Construction.

SPECIAL PROVISION
004-001-WC
Scope of Work

For this project, Item 4, "Scope of Work," of the Standard Specifications, is hereby amended with respect to the clauses cited below, and no other clauses or requirements of this Item are waived or changed hereby.

Article 4.1. Contract Intent is voided and replaced with applicable Articles of EJCDC C-700 document, Standard General Conditions of the Construction Contract.

Article 4.2. Changes in the Work is voided and replaced with applicable Articles of EJCDC C-700 document, Standard General Conditions of the Construction Contract.

Article 4.3. Differing Site Conditions is voided and replaced with applicable Articles of EJCDC C-700 document, Standard General Conditions of the Construction Contract.

Article 4.4. Requests and Claims for Additional Compensation is voided and replaced with applicable Articles of EJCDC C-700 document, Standard General Conditions of the Construction Contract.

SPECIAL PROVISION
005-001-WC
Control of the Work

For this project, Item 005, "Control of the Work," of the Standard Specifications, is hereby amended with respect to the clauses cited below, and no other clauses or requirements of this Item are waived or changed hereby.

Article 5.1. Authority of Engineer is voided and replaced with applicable Articles of EJCDC C-700 document, Standard General Conditions of the Construction Contract.

Article 5.2. Plans and Working Drawings is voided and replaced with applicable Articles of EJCDC C-700 document, Standard General Conditions of the Construction Contract.

Article 5.3. Conformity with Plans, Specifications, and Special Provisions is voided and replaced with applicable Articles of EJCDC C-700 document, Standard General Conditions of the Construction Contract.

Article 5.4. Coordination of Plans, Specifications, and Special Provisions is deleted and replaced with the following:

Article 5.4. Coordination of Plans, Specifications, Special Provisions, and Standard General Condition. The specifications, standard general conditions, accompanying plans (including additional plans for non-site-specific work), special provisions, change orders, and supplemental agreements are intended to work together and be interpreted as a whole.

Numerical dimensions govern over scaled dimensions. Special provisions govern over plans (including general notes), which govern over standard specifications and special specifications. Job-specific plan sheets govern over standard plan sheets. Standard General Conditions govern over Standard Specification.

However, in the case of conflict between plans (including general notes) and specifications regarding responsibilities for hazardous materials and traffic control in Items 1 through 9 and Item 502, “Barricades, Signs, and Traffic Handling,” special provisions govern over standard specifications and special specifications, which govern over the plans.

Notify the Engineer promptly of any omissions, errors, or discrepancies discovered so that necessary corrections and interpretations can be made. Failure to promptly notify the Engineer will constitute a waiver of all claims for misunderstandings or ambiguities that result from the errors, omissions, or discrepancies discovered.

Article 5.9. Construction Surveying is voided and replaced with applicable Articles of EJCDC C-700 document, Standard General Conditions of the Construction Contract.

Article 5.10. Inspections is voided and replaced with applicable Articles of EJCDC C-700 document, Standard General Conditions of the Construction Contract.

Article 5.12. Final Acceptance is voided and replaced with applicable Articles of EJCDC C-700 document, Standard General Conditions of the Construction Contract.

SPECIAL PROVISION
006-001-WC
Control of Materials

For this project, Item 006, "Control of Materials," of the Standard Specifications is amended hereby with respect to the clauses cited below, and no other clauses or requirements of this Item are waived or changed hereby.

Article 6.1. Source Control is voided and replaced with applicable Articles of EJCDC C-700 document, Standard General Conditions of the Construction Contract.

Article 6.2. Material Quality is voided and replaced with applicable Articles of EJCDC C-700 document, Standard General Conditions of the Construction Contract.

Article 6.3. Manufacturer Warranties is voided and replaced with applicable Articles of EJCDC C-700 document, Standard General Conditions of the Construction Contract.

Article 6.4. Sampling, Testing, and Inspections is voided and replaced with applicable Articles of EJCDC C-700 document, Standard General Conditions of the Construction Contract.

Article 6.7. Department-Furnished Material is voided and not replaced.

Article 6.9. Recycled Materials is voided and replaced with applicable Articles of EJCDC C-700 document, Standard General Conditions of the Construction Contract.

Article 6.10. Hazardous Materials is voided and replaced with applicable Articles of EJCDC C-700 document, Standard General Conditions of the Construction Contract.

SPECIAL PROVISION
007-001-WC
Legal Relations and Responsibilities

For this project, Item 7, "Legal Relations and Responsibilities" of the Standard Specifications, is hereby amended with respect to the clauses cited below, and no other clauses or requirements of this Item are waived or changed hereby.

Article 7.16. Hauling and Loads on Roadways and Structures is supplemented by the following:

D. Stockpiling of Materials. Do not store or stockpile material on bridge structures without written permission. If required, submit a structural analysis and supporting documentation by a licensed professional engineer for review by the Engineer. Permission may be granted if the Engineer finds that no damage or overstresses in excess of those normally allowed for occasional overweight loads will result to structures that will remain in use after Contract completion. Provide temporary matting or other protective measures as directed.

Article 7.17. Contractor's Responsibility for Work, Section B. Appurtenances is voided and replaced by the following:

B. Appurtenances.

1. **Unreimbursed Repair.** Except for destruction (not reusable) due to hurricanes, reimbursement will not be made for repair of damage to the following temporary appurtenances, regardless of cause:
   - signs,
   - barricades,
   - changeable message signs, and
   - other work zone traffic control devices.

   Crash cushion attenuators and guardrail end treatments are the exception to the above listing and are to be reimbursed in accordance with Section 7.14.B.2, "Reimbursed Repair."

   For the devices listed in this section, reimbursement may be made for damage due to hurricanes. Where the contractor retains replaced appurtenances after completion of the project, the Department will limit the reimbursement to the cost that is above the salvage value at the end of the project.

2. **Reimbursed Repair.** Reimbursement will be made for repair of damage due to the causes listed in Section 7.14.A, "Reimbursable Repair," to appurtenances (including temporary and permanent crash cushion attenuators and guardrail end treatments).

SPECIAL PROVISION
008-001-WC
Prosecution and Progress

For this project, Item 008, "Prosecution and Progress," of the Standard Specifications, is voided and replaced with applicable Articles of EJCDC C-700 document, Standard General Conditions of the Construction Contract.

Special Provision to Item 506

Temporary Erosion, Sedimentation, and Environmental Controls

Item 506, "Temporary Erosion, Sedimentation, and Environmental Controls," of the Standard Specifications is amended with respect to the clauses cited below. No other clauses or requirements of this Item are waived or changed.

Article 506.1., "Description." The second paragraph is voided and replaced by the following.

Contractor is considered primary operator to have day-to-day operational control as defined in TPDES GP TXR150000.

1.1. For projects with soil disturbance of less than 1 acre, no submittal to TCEQ will be required but Contractor will follow SWP3. For projects with soil disturbance of 1 acre to less than 5 acres a small site notice will be posted at the site. For projects with soil disturbance of 5 acres or more a notice of intent (NOI) is required and a large site notice posted at site. Postings will be in accordance with TPDES GP TXR150000. Postings not associated with project specific locations will be in same location as Department's postings.

1.2. Notice of Intent (NOI). Submit a NOI, if applicable, with the TCEQ under the TPDES GP TXR150000 at least 7 days prior to commencement of construction activities at the project site. Provide a signed copy to the Engineer and any other MS4 operators at the time of submittal. The Department will submit their NOI prior to contractor submission and will provide a copy for Contractor's use in completing the Contractor's NOI form.

1.3. Notice of Change (NOC). Upon concurrence of the Engineer, submit a NOC, if applicable, to the TCEQ within 14 days of discovery of a change or revision to the NOI as required by the TPDES GP TXR150000. Provide a signed copy of the NOC to the Engineer and any other MS4 operators at the time of submittal.

1.4. Notice of Termination (NOT). Upon concurrence of the Engineer, submit a NOT, if applicable, to the TCEQ within 30 days of the Engineer's approval that 70% native background vegetative cover is met or equivalent permanent stabilization have been employed in accordance with the TPDES GP TXR 150000. Provide a signed copy of the NOT to the Engineer and any other MS4 operators at the time of submittal.

Section 506.3.3., "Training," is supplemented by the following:

Training is provided by the Department at no cost to the Contractor and is valid for 3 yr. from the date of completion. The Engineer may require the following training at a frequency less than 3 yr. based on environmental needs:

- "Environmental Management System: Awareness Training for the Contractor" (English and Spanish) (Approximate running time 20 min.), and
- "Storm Water: Environmental Requirements During Construction" (English and Spanish) (Approximate running time 20 min.)

The CRPE, alternate CRPE designated for emergencies, Contractor's superintendent, Contractor, and subcontractor lead personnel involved in soil disturbing or SWP3 activities must enroll in and complete the training listed below and provide the certificate of completion to the Engineer before performing soil disturbing or SWP3 activities on the project. Coordinate enrollment as prescribed by the Department and pay associated fees for the following training:

- "Revegetation During Construction"
- "Construction General Permit Compliance," and

- “Construction Stage Gate Checklist (CSGC).”

Training and associated fee will not be measure or paid for directly but are subsidiary to this Item.

Special Specification 5001
Geogrid Base Reinforcement

1. DESCRIPTION

Furnish and place geogrid base reinforcement in accordance with the lines and grades shown on the plans or as directed.

2. MATERIALS

Provide geogrid base reinforcement, of the type shown on the plans, meeting the requirements of DMS-6240 "Geogrid for Base/Embankment Reinforcement." Use roll widths and lengths shown on the plans or as approved.

3. CONSTRUCTION

Prepare the subgrade as indicated on the plans or as directed. Set string lines for alignment if directed. Install geogrid in accordance with the lines and grades as shown on the plans. Place base material in lift thicknesses and compact as shown on the plans or as directed. Do not operate tracked construction equipment on the geogrid until a minimum fill cover of 6 in. is achieved. Rubber tire construction equipment may operate directly on the geogrid at speeds of less than 5 mph if the underlying material will support the loads. Where excessive substructure deformation is apparent, correct grid placement operations as recommended by the manufacturer or as directed

3.1. **Geogrid Placement.** Orient the geogrid length as unrolled parallel to the direction of roadway. Overlap geogrid sections as shown on the plans or as directed. Use plastic ties at overlap joints or as directed. Placement of geogrid around corners may require cutting and diagonal lapping. Pin geogrid at the beginning of the backfill section as directed. Keep geogrid taut at the beginning of the backfilling section but not restrained from stretching or flattening.

3.1.1. **Longitudinal Joints.** Overlap longitudinal joints by a minimum of 1 ft. Space longitudinal ties 10 ft. to 20 ft. or as directed.

3.1.2. **Transverse Joints.** Overlap transverse joints by a minimum of 1 ft. Space transverse ties 4 ft. to 5 ft. or as directed.

3.2. **Damage Repair.** As directed, remove and replace contractor damaged or excessively deformed areas without additional compensation. Lap repair areas a minimum of 3 ft in all directions. Tie each side of repair grid in at least 3 locations but do not exceed normal construction spacing; tie spacing for odd shapes will be as directed. Repair excessively deformed materials underlying the grid as directed

4. MEASUREMENT

Geogrid base reinforcement will be measured by the square yard of roadway placement as shown in the plans with no allowance for overlapping at transverse and longitudinal joints.

5. PAYMENT

The work performed and materials furnished in accordance with this Item and measured as provided under "Measurement" are paid for at the unit bid price for "Geogrid Base Reinforcement" of the type specified. This

price is full compensation for furnishing, preparing, hauling and placing materials including labor, materials, freight, tools, equipment and incidentals.

GUIDE SCHEDULE OF SAMPLING & TESTING

MAY 2016

Texas Department of Transportation

Using the Guide Schedule

Research of sampling and testing rates listed for project tests in the following Guide Schedule show that the Department's and the Contractor's risk of either rejecting "good" material or accepting "bad" material range from 20% to 40%.

To reduce this risk, we recommend that the sampling rate be increased during initial production. A four-fold increase in testing frequency will generally reduce risk to approximately 5%. The intent of increasing testing at the start of production is to insure that the Contractor's processes are in control and to establish acceptability requirements early.

There is a need to increase the frequency of testing for high-variability materials and when testing results do not meet specifications. The Engineer may require the Contractor to reimburse the Department for costs resulting from failing test results, in accordance with the specifications.

Materials incorporated in TxDOT projects are subjected to various quality assurance procedures such as testing (as outlined in this document), certification, quality monitoring, approved lists, etc. The Engineer and testing staff should familiarize themselves with materials to be used before work begins by reviewing the specifications and this document. Discuss material testing requirements with the Contractor.

Other testing required by the specifications, but not shown in the Guide Schedule, should be performed at a frequency necessary to provide adequate confidence that materials meet specifications.

NOTE: For projects subject to FHWA construction oversight activities, use the "Letter of Certification of Materials Used" to document reasons for material acceptance when a test fails. For all other projects, document the justification and explanation for acceptance of materials that fail project tests in the project file.

Assuring the quality of the product and proper incorporation of materials into the project begins with proper sampling practices. Sampling, testing, and construction inspection must be performed collaboratively to assure the specific attributes of the finished product reflect quality workmanship. Sampling guidance for hot-mixed asphalt is contained in Tex-225-F, "Random Selection of Bituminous Mixture Samples," and the respective specification for that material. All remaining materials are covered by method and materials specifications, to which the following applies.

For acceptance testing, especially that which directly determines payment for the Contractor, sampling personnel should provide randomness in sampling by avoiding patterned sampling routines. Examples of such sampling practices are as follows:

- Soils/flexible base: Vary sampling between stockpiling operations, completed stockpile, windrow, and project site. Vary the time of day sampling is performed.
- Aggregates: Sample aggregates nearest the point of incorporation into the work. Vary sampling between stockpiling operations, completed stockpile, belt sampling, and if deemed necessary, railroad cars/trucks. Vary the time of day sampling is performed.
- Concrete (structural and miscellaneous: Always sample as near as practicable to the point of placement. For strength testing, vary the time of day or the number of truck from which the concrete is sampled. Tests for slump, air, and temperature should be done often to ensure the consistent control of the concrete production (not applicable to miscellaneous concrete).

This Guide Schedule is applicable to all contracts associated with the 2014 Standard Specifications.

This is a guide for minimum sampling and testing.
Testing frequency may need to be increased for high material variability or when test results approach specification limits.

TABLE I – EMBANKMENTS, SUBGRADES, BACKFILL, AND BASE COURSES					
			PROJECT TESTS		
MATERIAL OR PRODUCT	TEST FOR	TEST NUMBER	LOCATION OR TIME OF SAMPLING (D)	FREQUENCY OF SAMPLING (F)	REMARKS
EMBANKMENT (CUTS & FILLS)	Liquid Limit (A)	Tex-104-E	During stockpiling operations, from completed stockpile, or project site (B)	Materials with PI ≤ 15: 10,000 CY	For Type A embankment or when required by the plans. This test may be waived for embankment cuts as directed by the Engineer. Determine a new liquid limit and plasticity index for each different material or notable change in material. Sample in accordance with Tex-100-E.
	Plasticity Index (A)	Tex-106-E		Materials with PI > 15: 5,000 CY	
	Gradation	Tex-110-E		Each 10,000 CY	When shown on plans. This test may be waived for embankment cuts, as directed by the Engineer. Sample in accordance with Tex-100-E.
	Moisture/Density	Tex-114-E		As directed by the Engineer	Not required for ordinary compaction. Determine a new optimum moisture and maximum density for each different material or notable change in material. Sample in accordance with Tex-100-E.
	In-place Density (A)	Tex-115-E	As designated by the Engineer	Fill: each 5,000 CY min. 1 per lift.	Not required for ordinary compaction. Determine a new optimum moisture and maximum density according to Tex-114-E for each different material or notable change in material. Correct the moisture contents measured by nuclear density gauge in Tex-115-E with the moisture contents determined in accordance with Tex-103-E, as necessary for control, for each different material or notable change in material and adjust the density accordingly. Materials such as RAP, gypsum, lime, cement, and iron ore tend to bias the counts for nuclear density gauges.
				Cut: each 6,000 LF	
RETAINING WALL (NON-SELECT BACKFILL)	As shown above for Embankment (Cuts and Fills)		As shown above for Embankment (Cuts and Fills)	As shown above for Embankment (Cuts and Fills)	Sample in accordance with Tex-100-E.
RETAINING WALL (SELECT BACKFILL)	Gradation	Tex-110-E	During stockpiling operations, from completed stockpile, or project site (B)	Each 5,000 CY	Sample in accordance with Tex-400-A.
	Resistivity (A)	Tex-129-E	During stockpiling operations, from completed stockpile, or project site (B)	Each 5,000 CY	For material with resistivity between 1,500 and 3,000 ohm-cm, determine chloride and sulfate content, as specified in Item 423. Sample in accordance with Tex-400-A.
	pH (A)	Tex-128-E	During stockpiling operations, from completed stockpile, or project site (B)	Each 5,000 CY	Sample in accordance with Tex-400-A.

This is a guide for minimum sampling and testing.
Testing frequency may need to be increased for high material variability or when test results approach specification limits.

TABLE I – EMBANKMENTS, SUBGRADES, BACKFILL, AND BASE COURSES					
			PROJECT TESTS		
MATERIAL OR PRODUCT	TEST FOR	TEST NUMBER	LOCATION OR TIME OF SAMPLING (D)	FREQUENCY OF SAMPLING (F)	REMARKS
RETAINING WALL (SELECT BACKFILL) (continued)	Soundness	Tex-411-A	During stockpiling operations, or from completed stockpile	1 per source, per project	Test when backfill sources appear to contain particles such as shale, caliche, or other soft, poor-durability particles. Sample in accordance with Tex-400-A.
	In-place Density (A)	Tex-115-E	As designated by the Engineer.	1 per backfill lift, per wall	Not required for rock backfill. For walls greater than 500 ft. in length, perform one test per lift for every 500 ft. in length. **(F)** Correct the moisture contents measured by nuclear density gauge in Tex-115-E with the moisture contents determined in accordance with Tex-103-E for each different material or notable change in material and adjust the density accordingly.
UNTREATED BASE COURSES	Liquid Limit (A)	Tex-104-E	During stockpiling operations, from completed stockpile, or windrow (B)	Each 5,000 CY	Sample in accordance with Tex-400-A.
	Plasticity Index (A)	Tex-106-E	During stockpiling operations, from completed stockpile, or windrow (B)	Each 5,000 CY	
	Gradation (A)	Tex-110-E	During stockpiling operations, from completed stockpile, or windrow (B)	Each 5,000 CY	Sample in accordance with Tex-400-A.
	Moisture/Density	Tex-113-E	From completed stockpile at the source (E)	Each 20,000 CY	Not required for ordinary compaction. Sample in accordance with Tex-400-A.
	Wet Ball Mill (A)	Tex-116-E	From completed stockpile at the source (E)	Each 20,000 CY	As required by the plans. Sample in accordance with Tex-400-A.
	Strength (A)	Tex-117-E	From completed stockpile at the source (E)	Each 20,000 CY	As required by the plans. When base material is from a source where the District has a record of satisfactory triaxial results, the frequency of testing may be reduced to one per 30,000 CY. If any one test falls below the minimum value required, the frequency of testing will return to the original frequency of 20,000 CY. Sample in accordance with Tex-400-A.

This is a guide for minimum sampling and testing.
Testing frequency may need to be increased for high material variability or when test results approach specification limits.

TABLE I – EMBANKMENTS, SUBGRADES, BACKFILL, AND BASE COURSES						
				PROJECT TESTS		
MATERIAL OR PRODUCT		TEST FOR	TEST NUMBER	LOCATION OR TIME OF SAMPLING (D)	FREQUENCY OF SAMPLING (F)	REMARKS
UNTREATED BASE COURSES		In-place Density (A)	Tex-115-E	As designated by the Engineer	Each 3,000 CY, min. 1 per lift	Correct the moisture contents measured by nuclear density gauge in Tex-115-E with the moisture contents determined in accordance with Tex-103-E, as necessary for control, for each different material or notable change in material and adjust the density accordingly. Materials such as RAP, gypsum, lime, cement, and iron ore tend to bias the counts for nuclear density gauges.
		Thickness (A)	Tex-140-E	As designated by the Engineer	Each 3,000 CY	Not required where survey grade control documents compliance.
TREATED SUBGRADE AND BASE COURSES	SUBGRADE BEFORE TREATMENT	Organic Content	Tex-148-E	As designated by the Engineer	1 per 500 linear feet or 5,000 CY	Required for existing subgrade material and material imported from a borrow source. Soil survey and geologic maps may be used to determine sampling locations. Sample in accordance with Tex-100-E.
		Sulfate Content	Tex-145-E	As designated by the Engineer	1 per 500 linear feet or 5,000 CY	Required for existing subgrade material and material imported from a borrow source. Soil survey and geologic maps may be used to determine sampling locations. Sample in accordance with Tex-100-E.
	NEW BASE MATERIAL	Liquid Limit (A)	Tex-104-E	During stockpiling operations, from completed stockpile, or windrow (B)	Each 5,000 CY	When central mix site or plant is used, windrow sampling may be waived. Sample in accordance with Tex-400-A.
		Plasticity Index (A)	Tex-106-E	During stockpiling operations, from completed stockpile, or windrow (B)	Each 5,000 CY	
		Gradation (A)	Tex-110-E	During stockpiling operations, from completed stockpile, or windrow (B)	Each 5,000 CY	Sample in accordance with Tex-400-A.
		Wet Ball Mill (A)	Tex-116-E	From completed stockpile at the source (E)	Each 20,000 CY	As required by the plans. Sample in accordance with Tex-400-A.

This is a guide for minimum sampling and testing.
Testing frequency may need to be increased for high material variability or when test results approach specification limits.

TABLE I – EMBANKMENTS, SUBGRADES, BACKFILL, AND BASE COURSES						
				PROJECT TESTS		
MATERIAL OR PRODUCT		TEST FOR	TEST NUMBER	LOCATION OR TIME OF SAMPLING (D)	FREQUENCY OF SAMPLING (F)	REMARKS
TREATED SUBGRADE AND BASE COURSES	NEW BASE MATERIAL	Strength (A)	Tex-117-E	From completed stockpile at the source (E)	Each 20,000 CY	As required by the plans. When base material is from a source where the District has a record of satisfactory triaxial results, the frequency of testing may be reduced to one per 30,000 CY. If any one test falls below the minimum value required, the frequency of testing will return to the original frequency of 20,000 CY.
	LIME	Compliance with DMS-6350	Tex-600-J	During delivery to project	Commercial Lime Slurry: each 200 tons of lime Carbide Lime Slurry: each 100 tons of lime	Sample in accordance with Tex-400-A.Verify the source is listed on the current Material Producer List for Lime. Only materials appearing on the Material Producer List will be accepted. Sample frequency for Carbide Lime Slurry may be increased as directed by the Engineer. For Hydrated Lime and Quick Lime project testing is not required but it is encouraged to sample and test the material at a rate of 1 per project as a best practice.
	CEMENT	Compliance with DMS-4600		Railroad car, truck, or cement bins		Verify the source is listed on the current Material Producer List for Cement. If not, sample and test in accordance with DMS-4600. (C)
	FLY ASH MATERIAL	Compliance with DMS-4615		Project samples at location designated by the Engineer		Verify the source is listed on the current Material Producer List for Fly Ash. Only materials from CST/M&P approved sources appearing on the Material Producer List for Fly Ash will be accepted. Project testing is not required but it is encouraged to sample and test the material at a rate of 1 per project as a best practice. (C)
	COMPLETE MIXTURE	Pulverization Gradation	Tex-101-E Part III	Roadway, after pulverization and mixing	As necessary for control	At the beginning of the project, one test must be made for each 4,500 CY or 6,000 tons until the Engineer is satisfied that acceptable pulverization results are being obtained. Sample in accordance with Tex-100-E.
		Soil-Cement Testing Soil-Lime Testing	Tex-120-E, Part II, or Tex-121-E, Part II	From roadway windrow after treatment (E)	Each 20,000 CY	Not required for ordinary compaction. Determine a new moisture/density curve for each different or notable change in material. Perform Tex-120-E, Part II, for Cement Treated Material, and Tex-121-E, Part II, for Lime, Lime-Fly Ash, or Fly Ash Treated Material. If Tex-120-E, Part I, Tex-121-E, Part I, or Tex-127-E is performed prior to the project, this test may be waived. Sample in accordance with Tex-100-E.

This is a guide for minimum sampling and testing.
Testing frequency may need to be increased for high material variability or when test results approach specification limits.

TABLE I – EMBANKMENTS, SUBGRADES, BACKFILL, AND BASE COURSES						
				PROJECT TESTS		
MATERIAL OR PRODUCT		TEST FOR	TEST NUMBER	LOCATION OR TIME OF SAMPLING (D)	FREQUENCY OF SAMPLING (F)	REMARKS
TREATED SUBGRADE AND BASE COURSES	COMPLETE MIXTURE	Soil-Cement Testing Soil-Lime Testing	Tex-120-E, Part I, Tex-121-E, Part I, or Tex-127-E	From roadway windrow after treatment	As necessary for control	Perform Tex-120-E, Part I, on cement treated material, and Tex-121-E, Part I, for lime-fly ash or fly ash treated material. Verifies the field strength by comparing results from the mix design. Performed at the discretion of Engineer. Sample in accordance with Tex-100-E.
		In-place Density (A)	Tex-115-E	As designated by the Engineer	Each 3,000 CY, min 1 per lift	Determine the appropriate moisture/density curve for each different material or notable change in material. Correct the moisture contents measured by nuclear density gauge in Tex-115-E with the moisture contents determined in accordance with Tex-103-E, as necessary for control, for each different material or notable change in material and adjust the density accordingly. Stabilizers and materials such as RAP, gypsum, and iron ore tend to bias the counts for nuclear density gauges.
		Thickness (A)	Tex-140-E	As designated by the Engineer	Each 3,000 CY	Not required where survey grade control documents are used for compliance
RECLAIMED ASPHALT PAVEMENT (RAP), CRUSHED CONCRETE, and RECYCLED MATERIALS		Sulfate Content	Tex-145-E	During stockpiling operations, from completed stockpile, or windrow	Each 5,000 CY	Required only for contractor furnished recycled material, including crushed concrete. Not required for RAP. Sample in accordance with Tex-400-A.
		Deleterious Material	Tex-413-A		Each 5,000 CY	Required only for contractor furnished recycled material, including crushed concrete. Sample in accordance with Tex-400-A.
		Decantation	Tex-406-A	During stockpiling operations, from completed stockpile, or windrow	Each 5,000 CY	Required only for contractor furnished RAP. Sample in accordance with Tex-400-A.

TABLE I – FOOTNOTES	
A	When this project acceptance test fails but the product is accepted, document the reasons for acceptance on the Letter of Certification of Materials Used or in the SiteManager Remarks field.
B	Engineer will select any of these locations or any combinations thereof with the provision that the initial sample will be obtained from the completed stockpile at the source and at least one out of ten consecutive samples will be taken at the project site (from the windrow for treated and untreated bases and embankments when possible).
C	Attach the corresponding QM test report for SiteManager projects to satisfy project sampling and testing requirements.

D	For acceptance testing, especially that which directly determines payment for the Contractor, sampling personnel should provide randomness in sampling by avoiding patterned sampling routines. Examples of such sampling practices are as follows: • Soils/Flexible Base: For gradation, liquid limit, and plastic limit, vary sampling between stockpiling operations, completed stockpile, windrow, and project site. Vary the time of day sampling is performed. • Aggregates: Sample aggregates nearest the point of incorporation into the work. Vary sampling between stockpiling operations, completed stockpile, belt sampling, and if deemed necessary, railroad cars/trucks. Vary the time of day sampling is performed.
E	The Engineer will sample from the completed stockpile at the source and test prior to placement.
F	Each test performed that is based on a quantity of material is considered “or fraction thereof” for calculating number of tests.

This is a guide for minimum sampling and testing.
Testing frequency may need to be increased for high material variability or when test results approach specification limits.

TABLE IA – ASPHALT STABILIZED BASE (Plant Mix)					
			PROJECT TESTS		
MATERIAL OR PRODUCT	TEST FOR	TEST NUMBER	LOCATION OR TIME OF SAMPLING (C)	FREQUENCY OF SAMPLING (D)	REMARKS
AGGREGATE	Gradation (A)	Tex-200-F, Part I	During stockpiling operations, from completed stockpile, or prior to mixing	Each 5,000 CY	Sample in accordance with Tex-400-A.
	Liquid Limit (A)	Tex-104-E	During stockpiling operations, from completed stockpile, or prior to mixing	Each 5,000 CY	Sample in accordance with Tex-400-A.
	Plasticity Index (A)	Tex-106-E	During stockpiling operations, from completed stockpile, or prior to mixing	Each 5,000 CY	
	Wet Ball Mill or L. A. Abrasion (A)	Tex-116-E or Tex-410-A	During stockpiling operations, from completed stockpile, or prior to mixing	Each 20,000 CY	When L. A. Abrasion is specified, tests are not required when the published value of the source, as listed on the current Material Producer List for BRSQC, meets the project specifications. Sample in accordance with Tex-400-A. **(B)**
	Coarse Aggregate Angularity (A)	Tex-460-A, Part I	During stockpiling operations, from completed stockpile, or prior to mixing	1 per project, per source	Not required for crushed stone sources. Sample in accordance with Tex-400-A.
	Sand Equivalent	Tex-203-F	Hot aggregate bins, feeder belt, or stockpile	1 per project, per source	When designated by the Engineer, test may be run on combined aggregates when multiple sources are used. Sample in accordance with Tex-400-A.
LIME	Compliance with DMS-6350		During delivery to the project	Hydrated Lime: 1 per project Commercial Lime Slurry: each 200 tons of lime **(D)** Carbide Lime Slurry: each 100 tons of lime **(D)** Quick Lime: 1 per project	On projects requiring less than 50 tons, material from CST/M&P approved sources may be accepted on the basis of Producer's Certification without sampling.
RECLAIMED ASPHALT PAVEMENT (RAP), and RECYCLED AGGREGATE	Decantation	Tex-217-F, Part II	During stockpiling operations, from completed stockpile, or prior to mixing	Each 10,000 CY	Sample in accordance with Tex-400-A.

This is a guide for minimum sampling and testing.
Testing frequency may need to be increased for high material variability or when test results approach specification limits.

TABLE IA – ASPHALT STABILIZED BASE (Plant Mix)					
			PROJECT TESTS		
MATERIAL OR PRODUCT	TEST FOR	TEST NUMBER	LOCATION OR TIME OF SAMPLING (C)	FREQUENCY OF SAMPLING (D)	REMARKS
RECYCLED ASPHALT SHINGLES (RAS)	Decantation	Tex-217-F, Part III	During stockpiling operations, from completed stockpile, or prior to mixing	Each 10,000 CY	Sample in accordance with Tex-400-A.
ASPHALT BINDER	Compliance with Item 300 – Binder and Tack Coat		Sampled, tested and preapproved by CST/M&P. Take project samples when designated by the Engineer.	1 each for binder and tack coat per project, per grade, per source	Test at least one sample taken from the project. Sample tack coat at the distributor on the roadway in accordance with Tex-500-C, Part III. Sample binder at hot mix plant in accordance with Tex-500-C, Part II. Binder should arrive on the project pre-approved. If not pre-approved, sample binder before use.
COMPLETE MIXTURE	Laboratory Density (A)	Tex-126-E	Plant Mix (C)	20,000 CY (25,000 tons)	Sample in accordance with Tex-222-F.
	Percent Asphalt (A)	Tex-236-F	Plant Mix (C)	Each 1,500 CY (2,000 tons) or days production	Determine asphalt content correlation factors for ignition oven at a minimum of one per project. Sample in accordance with Tex-222-F.
	Indirect Tensile Strength – Dry	Tex-226-F	Plant Mix	1 per project, per design	Sample in accordance with Tex-222-F.
	Moisture Susceptibility	Tex-530-C	As designated by the Engineer	1 per project, per design	This test may be waived, when shown on the plans. Sample in accordance with Tex-222-F.
ROADWAY	In-Place Air Voids (A)	Tex-207-F	Roadway cores, as designated by the Engineer (C, D)	Each 2,500 CY (3,000 tons) or days production	Not required for ordinary compaction or when air void requirements are waived. Sample in accordance with Tex-222-F.

TABLE IA – FOOTNOTES	
A	When this project acceptance test fails but the product is accepted, document the reasons for acceptance on the Letter of Certification of Materials Used or in the SiteManager Remarks field.
B	Engineer will select any of these locations or any combinations thereof with the provision that at least one out of ten consecutive samples will be taken at the project site (from the windrow for treated and untreated bases and embankments when possible).
C	For acceptance testing, especially that which directly determines payment for the Contractor, sampling personnel should provide randomness in sampling by avoiding patterned sampling routines. Examples of such sampling practices are as follows: • Soils/flexible base: Vary sampling between stockpiling operations, completed stockpile, windrow, and project site. Vary the time of day sampling is performed. • Aggregates: Sample aggregates nearest the point of incorporation into the work. Vary sampling between stockpiling operations, completed stockpile, belt sampling, and if deemed necessary, railroad cars/trucks. Vary the time of day sampling is performed.
D	Each test performed that is based on a quantity of material is considered “or fraction thereof” for calculating number of tests.

This is a guide for minimum sampling and testing.
Testing frequency may need to be increased for high material variability or when test results approach specification limits.

TABLE II – SEAL COAT					
			PROJECT TESTS		
MATERIAL OR PRODUCT	TEST FOR	TEST NUMBER	LOCATION OR TIME OF SAMPLING (C)	FREQUENCY OF SAMPLING (D)	REMARKS
AGGREGATE	Gradation (A)	Tex-200-F, Part I	Stockpile (At source or at point of delivery)	One each 1,000 CY	Rate may be reduced to one each 2,000 CY if the Engineer approves a contractor quality control plan. Sample in accordance with Tex-221-F.
	L. A. Abrasion (A)	Tex-410-A	Stockpile	1 per 20,000 CY	Verify the published value of the source, as listed on the current Material Producer List for BRSQC, meets the project specifications. If not, sample and test at 1 per 20,000 CY prior to use. Sample in accordance with Tex-221-F. (B)
	Magnesium Soundness (A)	Tex-411-A	Stockpile	1 per 20,000 CY	Verify the published value of the source, as listed on the current Material Producer List for BRSQC, meets the project specifications. If not, sample and test at 1 per 20,000 CY prior to use. Sample in accordance with Tex-221-F. (B)
	Surface Aggregate Classification (A)	Tex-612-J, Tex-411-A	Stockpile	1 per 20,000 CY	Verify the published value of the source, as listed on the current Material Producer List for BRSQC, meets the project specifications. If not, sample and test at 1 per 20,000 CY prior to use. Sample in accordance with Tex-221-F. (B)
	Pressure Slake (A)	Tex-431-A	Stockpile	1 per 20,000 CY	Same as above. Required only for lightweight aggregate. Sample in accordance with Tex-221-F.
	Freeze Thaw (A)	Tex-432-A	Stockpile	1 per 20,000 CY	Same as above. Required only for lightweight aggregate. Sample in accordance with Tex-221-F.
	Unit Weight	Tex-404-A	Stockpile	1 per 20,000 CY	Same as above. Required only for lightweight aggregate. Sample in accordance with Tex-221-F.
	24 hr Water Absorption (A)	Tex-433-A	Stockpile	1 per 20,000 CY	Same as above. Required only for lightweight aggregate. Sample in accordance with Tex-221-F.
	Coarse Aggregate Angularity	Tex-460-A	Stockpile	1 per 20,000 CY	Only required for crushed gravel. Sample in accordance with Tex-221-F.
	Deleterious Material (A)	Tex-217-F, Part I	Stockpile	1 per 10,000 CY	Not required for lightweight aggregate. Sample in accordance with Tex-221-F.
	Decantation (A)	Tex-406-A	Stockpile	1 per 10,000 CY	Sample in accordance with Tex-221-F.
	Flakiness Index	Tex-224-F	Stockpile	Frequency as directed by the Engineer	Sample in accordance with Tex-221-F.

This is a guide for minimum sampling and testing.
Testing frequency may need to be increased for high material variability or when test results approach specification limits.

TABLE IA – ASPHALT STABILIZED BASE (Plant Mix)					
			PROJECT TESTS		
MATERIAL OR PRODUCT	TEST FOR	TEST NUMBER	LOCATION OR TIME OF SAMPLING (C)	FREQUENCY OF SAMPLING (D)	REMARKS
	Micro Deval	Tex-461-A	Stockpile	1 per project or as necessary for control	Compare result to published value listed on the current Material Producer List for BRSQC. Submit sample to CST/M&P for Soundness and L.A. Abrasion testing when results differ by more than 3% points, unless otherwise directed by the Engineer. Sample in accordance with Tex-221-F.
	White Rock Count	Tex-220-F	Stockpile		Required only for Limestone Rock Asphalt. Not required when CST/M&P provides inspection at the plant. Sample in accordance with Tex-221-F.
	Naturally Impregnated Bitumen Content	Tex-236-F	Stockpile		Required only for Limestone Rock Asphalt. Not required when CST/M&P provides inspection at the plant. Sample in accordance with Tex-221-F.
PRECOATED AGGREGATE	Asphalt Content	Tex-236-F	Stockpile	Frequency as directed by the Engineer when a target value is specified	Sample in accordance with Tex-221-F.
ASPHALT	Compliance with Item 300		Sampled, tested, and preapproved by CST/M&P. Take project samples when designated by the Engineer from the distributor or transport.	1 per project, per grade, per source	Sample in accordance with Tex-500-C. Binder should arrive on the project pre-approved. If not pre-approved, sample binder before use.

TABLE II – FOOTNOTES	
A	When this project acceptance test fails but the product is accepted, document the reasons for acceptance on the Letter of Certification of Materials Used or in the SiteManager Remarks field.
B	Attach the corresponding QM test report for SiteManager projects to satisfy project sampling and testing requirements.
C	For acceptance testing, especially that which directly determines payment for the Contractor, sampling personnel should provide randomness in sampling by avoiding patterned sampling routines. Examples of such sampling practices are as follows: • Aggregates: Sample aggregates nearest the point of incorporation into the work. Vary sampling between stockpiling operations, completed stockpile, belt sampling, and if deemed necessary, railroad cars/trucks. Vary the time of day sampling is performed.
D	Each test performed that is based on a quantity of material is considered “or fraction thereof” for calculating number of tests.

This is a guide for minimum sampling and testing.
Testing frequency may need to be increased for high material variability or when test results approach specification limits.

TABLE III – HYDRAULIC CEMENT CONCRETE – STRUCTURAL (Classes: C, F, H, S, CO, K, LMC, or SS)						
				PROJECT TESTS		
MATERIAL OR PRODUCT		TEST FOR	TEST NUMBER	LOCATION OR TIME OF SAMPLING (D)	FREQUENCY OF SAMPLING (E)	REMARKS
MINERAL AGGREGATE	COARSE AGGREGATE	Decantation (B)	Tex-406-A	From stockpile at concrete plant	Each 20,000 CY of concrete (each source)	Sample in accordance with Tex-400-A.
		Sieve Analysis (A) (B)	Tex-401-A		Each 1,000 CY of concrete (each source)	Sample in accordance with Tex-400-A. Test combined aggregate when used.
		Deleterious Materials (B)	Tex-413-A		1 per project or as necessary for control	Sample in accordance with Tex-400-A.
		Los Angeles Abrasion (A) (B)	Tex-410-A		Two, each source	Verify the value of the source, as listed on the current Material Producer list for CRSQC, meets the project specifications. If not, sample and submit to CST/M&P for testing prior to use in accordance with Tex-499-A. Sample in accordance with Tex-400-A. (C)
		5-cycle Magnesium Sulfate Soundness (A) (B)	Tex-411-A		Two, each source	Verify the value of the source, as listed on the current CRSQC, meets the project specifications. (C)
	FINE AGGREGATE	Sand Equivalent (B)	Tex-203-F	From stockpile at concrete plant	1 per project or as necessary for control	Sample in accordance with Tex-400-A. Test combined aggregate when used.
		Organic Impurities (B)	Tex-408-A		1 per project, per source	Sample in accordance with Tex-400-A.
		Sieve Analysis (A) (B)	Tex-401-A		Each 1,000 CY of concrete (each source)	Sample in accordance with Tex-400-A.
		Fineness Modulus (B)	Tex-402-A		1 per project or as necessary for control	Sample in accordance with Tex-400-A. Test combined aggregate when used. Test to confirm material variability when strength values are in question.
		Deleterious Material (B)	Tex-413-A		1 per project or as necessary for control	Sample in accordance with Tex-400-A. Test to confirm material variability when strength values are in question.
		Acid Insoluble Residue (A) (B)	Tex-612-J		Two, each source	Only for concrete subject to direct traffic. Verify the value of the source, as listed on the current CRSQC, meets the project specifications. If not, sample and submit to CST/M&P for testing prior to use in accordance with Tex-499-A. Sample in accordance with Tex-400-A. (C)
SILICA FUME		Compliance with DMS-4630 (A)		Railroad car, truck, bags or silos	1 per project, per class of concrete (For each type and brand)	Sample in accordance with Tex-320-D.

This is a guide for minimum sampling and testing.
Testing frequency may need to be increased for high material variability or when test results approach specification limits.

TABLE III – HYDRAULIC CEMENT CONCRETE – STRUCTURAL (Classes: C, F, H, S, CO, K, LMC, or SS)					
			PROJECT TESTS		
MATERIAL OR PRODUCT	TEST FOR	TEST NUMBER	LOCATION OR TIME OF SAMPLING (D)	FREQUENCY OF SAMPLING (E)	REMARKS
METAKAOLIN	Compliance with DMS-4635 (A)		Railroad car, truck or silos	1 per project, per class of concrete (For each type and brand)	
MIX DESIGN	Compliance with Standard Specification Item 421.4.A		At source (if not approved)	Min. 1 design per class, per source	Verify if cement, fly ash, slag cement, and chemical admixture sources are listed on the Material Producer Lists. If not, sample and submit to CST/M&P for testing. Water testing is contracted by the concrete supplier (commercial lab report to be reviewed by TxDOT). Sample in accordance with Tex-300-D for cement and in accordance with Tex-733-I for fly ash.
JOINT MATERIAL	Compliance with DMS-6300				Sample in accordance with Tex-500-C. Verify the source is listed on the Material Producer List for Joint Sealers. If not, sample and test prior to use in accordance with DMS-6310. (C)
CURING COMPOUND	Compliance with DMS-4650		Sampled at jobsite; tested by CST/M&P. See remarks.	When requested by CST	Only products listed on the Material Producer List for Concrete Curing Compounds will be allowed. When sample is requested by CST, sample in accordance with Tex-718-I. Ensure container has been agitated and mixed prior to sampling. (C)
EVAPORATION RETARDANTS	Compliance with DMS-4650				Only products listed on the Material Producer list for Evaporation Retardants will be allowed. (C)
REINFORCING STEEL	Compliance with the Std. Specifications & Spec. Provisions	As Specified			Only materials from CST/M&P approved sources listed on the Material Producer Lists for Reinforcing Steel Mills and Seven Wire Steel Strand will be allowed. (C)
MECHANICAL COUPLERS	Compliance with DMS-4510	Tex-743-I	Sampled at jobsite; Tested by CST/M&P	3 couplers per lot (500 couplers) for each type, model, bar size and grade	Only materials from CST/M&P approved sources listed on the Material Producer List for Mechanical Couplers will be allowed. (C)
LATEX	Compliance with DMS-4640 for concrete chemical admixtures		Sampled at jobsite.	Min. of 1 test per project	Sample in accordance with Tex-321-E.
EPOXY	Compliance with DMS-6100, unless otherwise specified		Sampled at jobsite if not pre-approved by CST/M&P.	1 per batch or shipment	Verify the source is listed on the Material Producer List for Epoxies and Adhesives. If not, sample and test prior to use in accordance with DMS-6100. Sample in accordance with Tex-734-I. (C)

This is a guide for minimum sampling and testing.
Testing frequency may need to be increased for high material variability or when test results approach specification limits.

TABLE III – HYDRAULIC CEMENT CONCRETE – STRUCTURAL (Classes: C, F, H, S, CO, K, LMC, or SS)					
			PROJECT TESTS		
MATERIAL OR PRODUCT	TEST FOR	TEST NUMBER	LOCATION OR TIME OF SAMPLING (D)	FREQUENCY OF SAMPLING (E)	REMARKS
CONCRETE	Compressive Strength (A)	Tex-418-A	At point of concrete placement	4 cylinders for each 60 CY per class, per day (For bridge railing and traffic railing, testing may be reduced to 4 cylinders per 180 CY per class regardless of days)	Sampling must be in accordance with Tex-407-A. Test two cylinders at 7 days, and if the average value is below the design strength as defined in Item 421 Table 8, test the remaining 2 cylinders at 28 days. If the average value of the 2 cylinders tested at 7 days meets the minimum design strength listed in Item 421 Table 8, the 2 remaining cylinders are not required to be tested.
CONCRETE	Slump	Tex-415-A		1 test per 4 strength specimens	Sample in accordance with Tex-407-A. Perform slump and temperature tests on the same load from which strength test specimens are made. Perform entrained air test only when entrained air concrete is specified in the plans. Check temperature of every load for bridge slabs and mass concrete placements. Contractor's required testing will be in accordance with specification requirements for the appropriate specification Item #.
	Entrained Air (A)	Tex-416-A or Tex-414-A			
	Temperature of Concrete (A)	Tex-422-A			
	Slab Thickness and Depth of Reinforcement	Tex-423-A, Part II	During dry run and during concrete placement (Bridge decks and direct traffic culverts)	1 per span	Min 6–Max 18 locations per span

TABLE III – FOOTNOTES	
A	When this project acceptance test fails but the product is accepted, document the reasons for acceptance on the Letter of Certification of Materials Used or in the SiteManager Remarks field.
B	These Project Tests may be used for one or more projects being furnished concrete from the same plant during the same period.
C	Attach the corresponding QM test report for SiteManager projects to satisfy project sampling and testing requirements.
D	For acceptance testing, especially that which directly determines payment for the Contractor, sampling personnel should provide randomness in sampling by avoiding patterned sampling routines. Examples of such sampling practices are as follows: • Aggregates: Sample aggregates nearest the point of incorporation into the work. Vary sampling between stockpiling operations, completed stockpile, and if deemed necessary, railroad cars/trucks. Vary the time of day sampling is performed. • Concrete (structural): Always sample as near as practicable to the point of placement. For strength testing, vary the time of day or the number of truck from which the concrete is sampled. Test often for slump, air, and temperature to ensure the consistent control of the concrete production.
E	Each test performed that is based on a quantity of material is considered "or fraction thereof" for calculating number of tests.

This is a guide for minimum sampling and testing.
Testing frequency may need to be increased for high material variability or when test results approach specification limits.

TABLE IV – HYDRAULIC CEMENT CONCRETE – NON-STRUCTURAL CONCRETE (Classes: A, B, or E)					
			PROJECT TESTS		
MATERIAL OR PRODUCT	TEST FOR	TEST NUMBER	LOCATION OR TIME OF SAMPLING (B)	FREQUENCY OF SAMPLING (C)	REMARKS
CONCRETE	Compressive Strength (A)	Tex-418-A	At point of concrete placement	2 cylinders per 180 CY, per class	Sampling must be in accordance with Tex-407-A. Strength will be determined by 7-day specimens.
MIX DESIGN	Compliance with the Standard Specification		At source if not approved.	Min. 1 design per class, per source	Verify if cement, fly ash, slag cement, and chemical admixture sources are listed on the Material Producer Lists. If not, sample and submit to CST/M&P for testing. Sample in accordance with Tex-300-D for cement and in accordance with Tex-733-I for fly ash. Water testing is contracted by the concrete supplier (commercial lab report to be reviewed by TxDOT).
SILICA FUME	Compliance with DMS-4630		Railroad car, truck, bags or silos	1 test per project, per class (for each type and brand)	Sample in accordance with Tex-320-D.
METAKAOLIN	Compliance with DMS-4635		Railroad car, truck or silos	1 test per project, per class (for each type and brand)	

TABLE IV – FOOTNOTES	
A	When this project acceptance test fails but the product is accepted, document the reasons for acceptance on the Letter of Certification of Materials Used or in the SiteManager Remarks field.
B	For acceptance testing, especially that which directly determines payment for the Contractor, sampling personnel should provide randomness in sampling by avoiding patterned sampling routines. Examples of such sampling practices are as follows: • Concrete (miscellaneous): Always sample as near as practicable to the point of placement. For strength testing, vary the time of day or the number of truck from which the concrete is sampled.
C	Each test performed that is based on a quantity of material is considered “or fraction thereof” for calculating number of tests.

This is a guide for minimum sampling and testing.
Testing frequency may need to be increased for high material variability or when test results approach specification limits.

TABLE V – HYDRAULIC CEMENT CONCRETE PAVEMENT (Classes: P or HES)						
				PROJECT TESTS		
MATERIAL OR PRODUCT		TEST FOR	TEST NUMBER	LOCATION OR TIME OF SAMPLING	FREQUENCY OF SAMPLING (D)	REMARKS
MINERAL AGGREGATE	COARSE AGGREGATE	Decantation	Tex-406-A	From stockpile at concrete plant	Each 20,000 CY of concrete (each source)	Sample in accordance with Tex-400-A.
		Sieve Analysis (A)	Tex-401-A		As necessary for control	Sample in accordance with Tex-400-A. Test combined aggregate when used.
		Deleterious Materials	Tex-413-A		Each 20,000 CY of concrete (each source)	Sample in accordance with Tex-400-A.
		L.A. Abrasion (A)	Tex-410-A		Two, each source	Verify the value of the source, as listed on the current CRSQC, meets the project specifications. If not, sample and submit to CST/M&P for testing prior to use in accordance with Tex-499-A. Sample in accordance with Tex-400-A. (C)
		5-Cycle Magnesium Sulfate Soundness (A)	Tex-411-A			
	FINE AGGREGATE	Sand Equivalent	Tex-203-F	From stockpile at concrete plant	Each 3,000 CY of concrete (Each source or combination of sources)	Sample in accordance with Tex-400-A. Test combined aggregate when used. No less than one per week's production.
		Organic Impurities	Tex-408-A		1 per project, per source	Sample in accordance with Tex-400-A.
		Sieve Analysis (A)	Tex-401-A		As necessary for control	Sample in accordance with Tex-400-A. Test combined aggregate when used.
		Fineness Modulus (B)	Tex-402-A			
		Deleterious Material (B)	Tex-413-A		Each 20,000 CY of concrete (each source)	Sample in accordance with Tex-400-A.
		Acid Insoluble (A)	Tex-612-J		1 per project, per source	Verify the value of the source, as listed on the current CRSQC, meets the project specifications. If not, sample and submit to CST/M&P for testing prior to use in accordance with Tex-499-A. Sample in accordance with Tex-400-A. (C)
MIX DESIGN		Compliance with the Standard Specifications Item 421.4.A		At source, if not approved	Min. 1 design, per class, per source	Verify if cement, fly ash, ground granulated blast furnace slag, and admixture sources are listed on the Material Producer List. If not, sample and submit to CST/M&P for testing. Sample in accordance with Tex-300-D for cement and in accordance with Tex-733-I for fly ash. Water testing is contracted by the concrete supplier (commercial lab report to be reviewed by TxDOT).

This is a guide for minimum sampling and testing.
Testing frequency may need to be increased for high material variability or when test results approach specification limits.

TABLE V – HYDRAULIC CEMENT CONCRETE PAVEMENT (Classes: P or HES)					
			PROJECT TESTS		
MATERIAL OR PRODUCT	TEST FOR	TEST NUMBER	LOCATION OR TIME OF SAMPLING	FREQUENCY OF SAMPLING (D)	REMARKS
SILICA FUME	Compliance with DMS-4630		Railroad car, truck, bags or silos	1 per project per class of concrete (For each type and brand)	Sample in accordance with Tex-320-D.
METAKAOLIN	Compliance with DMS-4635		Railroad car, truck or silos	1 per project per class of concrete (For each type and brand)	Sample in accordance with Tex-320-D.
JOINT MATERIAL	Compliance with DMS-6310		Sampled at jobsite if not sampled at source by CST/M&P; tested by CST/M&P. See remarks.	1 per batch or shipment	Sample in accordance with Tex-500-C. Sampling may be waived when the source is listed on the Material Producer List for Joint Sealers. **(C)**
CURING COMPOUND	Compliance with DMS-4650		Sampled at jobsite; tested by CST/M&P. See remarks.	When requested by CST	Only products listed on the Material Producer List for Concrete Curing Compounds will be allowed. When sample is requested by CST, sample in accordance with Tex-718-I. Ensure container has been agitated and mixed prior to sampling. **(C)**
EVAPORATION RETARDANTS	Compliance with DMS-4650				Only products listed on the Material Producer List for Evaporation Retardants will be allowed. **(C)**
REINFORCING STEEL	Compliance with the Std. Specifications & Spec. Provisions	As Specified			Only materials from CST/M&P approved sources listed on the Material Producer List for Reinforcing Steel Mills and Seven Wire Steel Strand will be accepted. **(C)**
MULTIPLE PIECE TIE BARS	Compliance with DMS-4515	Tex-712-I	Sampled at jobsite if not sampled at source by CST/M&P; tested by CST/M&P. See remarks.	Refer to Tex-711-I for sampling rates	Only materials from CST/M&P approved sources listed on the Material Producer List for Multiple Piece Tie-bars for Concrete Pavements will be allowed. Sample in accordance with Tex-734-I.
EPOXY	Compliance with DMS-6100		Sampled at jobsite if not pre-approved by CST/M&P. See remarks.	1 batch per shipment	Verify the source is listed on the Material Producer List for Epoxies and Adhesives. If not, sample and test prior to use in accordance with DMS-6100. Sample in accordance with Tex-734-I. **(C)**

This is a guide for minimum sampling and testing.
Testing frequency may need to be increased for high material variability or when test results approach specification limits.

TABLE V – HYDRAULIC CEMENT CONCRETE PAVEMENT (Classes: P or HES)					
			PROJECT TESTS		
MATERIAL OR PRODUCT	TEST FOR	TEST NUMBER	LOCATION OR TIME OF SAMPLING	FREQUENCY OF SAMPLING (D)	REMARKS
CONCRETE	Strength (A) (B)	Tex-448-A or Tex-418-A	At point of concrete placement	2 cylinders for every 10 contractor job control tests	Sample in accordance with Tex-407-A. When the contract requires the project testing to be by the Engineer, the frequency and job control testing will be in accordance with the item of work. Split sample verification testing used when contractor performs job control testing. When job control testing by the contractor is waived by the plans, the frequency of sampling will be one test (2 specimens) for each 3,000 SY of concrete or fraction thereof or per day and split sample verification testing will be waived. Contractor's required testing will be in accordance with specification requirements for the appropriate specification Item #.
	Slump	Tex-415-A	At time and location strength specimens are made	1 test for every 10 contractor job control tests.	Sample in accordance with Tex-407-A. Slump is not required for slip-formed pavement. Perform slump and temperature tests on the same load from which the strength specimens are made. Perform entrained air test only when entrained air concrete is specified in the plans. Contractor's required testing will be in accordance with specification requirements for the appropriate specification Item #.
	Entrained Air (A)	Tex-416-A or Tex-414-A			
	Temperature	Tex-422-A			
	Thickness	Tex-423-A	Center of paving machine	Every 500 feet	Methods other than Tex-423-A may be shown on the plans.
	Ride Quality Surface Test Type B (A)	Tex-1001-S	Final riding surface of travel lanes		Engineer may verify contractor's results for surface test Type B. For traditional design-bid-build TxDOT projects, CST has contracted with TTI to perform random ride verification at 10% frequency. Results from surface test Type A are not required to be reported.

TABLE V – FOOTNOTES	
A	When this project acceptance test fails but the product is accepted, document the reasons for acceptance on the Letter of Certification of Materials Used or in the SiteManager Remarks field.
B	When a project test does not meet the specified strength requirements and a reduced pay factor is assigned, document the analysis on the Letter of Certification of Materials Used.
C	Attach the corresponding QM test report for SiteManager projects to satisfy project sampling and testing requirements.
D	Each test performed that is based on a quantity of material is considered “or fraction thereof” for calculating number of tests.

This is a guide for minimum sampling and testing.
Testing frequency may need to be increased for high material variability or when test results approach specification limits.

TABLE VI – ASPHALT CONCRETE PAVEMENT (Items 341, 342, 344, 346, 347 and 348) (All testing as noted in Table VI may be waived for exempt production as defined by specification.)					
			PROJECT TESTS		
MATERIAL OR PRODUCT	TEST FOR	TEST NUMBER	LOCATION (Per Design)	FREQUENCY OF SAMPLING (E)	REMARKS
COARSE AGGREGATE	L. A. Abrasion (A)	Tex-410-A	Stockpile (B)	1 per project, per source	Verify the published value of the source, as listed on the current Material Producer list for BRSQC, meets the project specifications. If not, sample in accordance with Tex-221-F and submit to CST/M&P for testing prior to use in accordance with Tex-499-A. (C)
	Magnesium Sulfate Soundness (A)	Tex-411-A			
	Surface Aggregate Classification (A)	Tex-499-A		1 per project, per source	
	Micro Deval	Tex-461-A		1 per project, per aggregate source	Not required when the Rated Source Soundness Magnesium loss is 15 or less as listed on the current published BRSQC. If testing is required, sample in accordance with Tex-221-F.
COMBINED AGGREGATE	Sand Equivalent	Tex-203-F	Stockpiles, hot bins or feeder belts	1 per project, per source, per design	Does not apply to Item 342. Sample in accordance with Tex-221-F. The timing of when the test is performed is at the discretion of the Engineer.
ASPHALT BINDER	Compliance with Item 300 Binder & Tack Coat (A)		Sampled, tested and pre-approved by CST/M&P. Project test sampled at the Plant for Binder & Road for Tack Coat	1 each for binder and tack coat per project, per grade, per source	Test a minimum of one sample taken from the project. Sample tack coat at the distributor on the roadway in accordance with Tex-500C, Part III. Sample binder at hot mix plant in accordance with Tex-500-C, Part II. Binder should arrive on the project pre-approved. If not pre-approved, sample binder before use.
MIX DESIGN	Compliance with applicable specification	Tex-204-F	At source (if not approved)	Min 1 design per Mix Type and Asphalt Grade	Verify that aggregates, recycled asphalt pavement, recycled asphalt shingles, mineral filler, asphalt binder, anti-stripping additives, and warm mix systems are on the Material Producer List where applicable and that they meet project specification requirements. Project sampling and testing may be conducted on individual materials as necessary for control.

This is a guide for minimum sampling and testing.
Testing frequency may need to be increased for high material variability or when test results approach specification limits.

TABLE VI – ASPHALT CONCRETE PAVEMENT (Items 341, 342, 344, 346, 347 and 348) (All testing as noted in Table VI may be waived for exempt production as defined by specification.)							
			PROJECT TESTS		PROJECT INDEPENDENT ASSURANCE TESTS		
MATERIAL OR PRODUCT	TEST FOR	TEST NUMBER	LOCATION	FREQUENCY (Per Design)	LOCATION	FREQUENCY	REMARKS
COMPLETE MIXTURE	Asphalt Content (%) (A)	Tex-236-F	Engineer Truck Sample (D)	Minimum 1 per Lot			Sample in accordance with Tex-222-F. Determine correlation factors for ignition oven using Tex-236-F at a minimum of one per project.
	Voids in Mineral Aggregates (VMA)	Tex-207-F	Truck Sample Plant Produced (D)	1 per Sublot	Truck	1 per 10 Lots only if compactor is shared by Contractor and State	Sample in accordance with Tex-222-F. Does not apply to Item 342, "Permeable Friction Course." Contractor's required testing will be in accordance with specification requirements for the appropriate specification Item #.
	Gradation (A)	Tex-236-F	Engineer Truck Sample (D)	Minimum 1 per 12 Sublots (E)			Sample in accordance with Tex-222-F. Determine correlation factors for ignition oven using Tex-236-F at a minimum of one per project.
	Boil Test	Tex-530-C	Truck Sample	1 per project			Sample in accordance with Tex-222-F. Unless waived by the Engineer.
	Indirect Tensile Strength – Dry	Tex-226-F					Sample in accordance with Tex-222-F. Unless waived by the Engineer. Does not apply to Items 342, 346, and 348.
	Moisture Content	Tex-212-F, Part II	Engineer Truck Sample				Sample in accordance with Tex-222-F.
	Lab Molded Density (A)	Tex-207-F	Truck Sample (D)	1 per Sublot 1 per Lot for Item 347	Truck	1 per 10 Lots only if compactor is shared by Contractor and State	Sample in accordance with Tex-222-F. Contractor's required testing will be in accordance with specification requirements for the appropriate specification Item #.
	Drain Down Test (A)	Tex-235-F	Engineer Truck Sample	1 per project 1 per Lot for Item 342			Sample in accordance with Tex-222-F. Not required for Item 341 and Item 344.
	Hamburg Wheel Test (A)	Tex-242-F	Engineer Truck Sample	1 per project			Sample in accordance with Tex-222-F. Sample during production. Does not apply to Item 348.
	Overlay Test	Tex-248-F	Engineer Truck Sample	1 per project			Sample in accordance with Tex-222-F. Does not apply to Items 341, 344, and 348.

This is a guide for minimum sampling and testing.
Testing frequency may need to be increased for high material variability or when test results approach specification limits.

TABLE VI – ASPHALT CONCRETE PAVEMENT (Items 341, 342, 344, 346, 347, and 348) (All testing as noted in Table VI may be waived for exempt production as defined by specification.)					
			PROJECT TESTS		
MATERIAL OR PRODUCT	TEST FOR	TEST NUMBER	LOCATION	FREQUENCY (Per Design)	REMARKS
ROADWAY	In-Place Air Voids (A)	Tex-207-F	Roadway (D)	2 cores per Sublot	Two cores taken per Sublot and averaged. Sample in accordance with Tex-222-F. Does not apply to Items 342, 347, and 348.
ROADWAY	Segregation Profile (A)	Tex-207-F, Part V	Roadway	1 per project	Not required when Contractor uses thermal imaging system. Does not apply to Items 342, 347, and 348.
	Joint Density (A)	Tex-207-F, Part VII	Roadway	1 per project	
	Thermal Profile	Tex-244-F	Immediately behind paver	1 per project	Not required when Contractor uses thermal imaging system.
	Ride Quality Test Type B (A)	Tex-1001-S	Final riding surface of travel lanes	1 per project	Engineer may verify Contractor's results for surface test Type B. For traditional design-bid-build TxDOT projects, CST has contracted with TTI to perform random ride verification at 10% frequency. Results for surface test Type A are not required to be reported.
	Permeability	Tex-246-F	Roadway	1 per project	Only applies to Items 342, 347, and 348.
FABRIC UNDERSEAL	Compliance with DMS-6220		Sampled, tested, and approved by CST/M&P		Sampling must be in accordance with Tex-735-I. Verify the source is listed on the current Material Producer List for Silt Fence, Filter Fabric, and Fabric Underseals. If not, sample and test prior to use in accordance with DMS-6220.

TABLE VI – FOOTNOTES	
A	When this project acceptance test fails but the product is accepted, document the reasons for acceptance on the Letter of Certification of Materials Used or in the SiteManager Remarks field. This letter is required only for Asphalt Content and/or Gradation when production of complete mixture is suspended as required by QC/QA specifications.
B	Sampling may be performed at the plant, quarry, or both. Aggregate properties may be re-tested at any time during the project. These project tests may be used for one or more projects furnishing hot mix with the same aggregate source.
C	Attach the corresponding QM test report for SiteManager projects to satisfy project sampling and testing requirements.
D	Perform random sampling as specified in Tex-225-F, "Random Selection of Bituminous Mixture Samples."
E	Each test performed that is based on a quantity of material is considered "or fraction thereof" for calculating number of tests.

This is a guide for minimum sampling and testing.
Testing frequency may need to be increased for high material variability or when test results approach specification limits.

TABLE VII – ASPHALT CONCRETE PAVEMENT (Items 334) (Refer to DMS-9210, "Limestone Rock Asphalt (LRA)," for testing requirements for Item 330.)					
			PROJECT TESTS		
MATERIAL OR PRODUCT	TEST FOR	TEST NUMBER	LOCATION	FREQUENCY (Per Design) (F)	REMARKS
COARSE AGGREGATE	L. A. Abrasion (A)	Tex-410-A	Stockpile (B)	1 per project, per source	Verify the published value of the source, as listed on the current Material Producer List for BRSQC, meets the project specifications. If not, sample in accordance with Tex-221-F and submit to CST/M&P for testing prior to use in accordance with Tex-499-A. (D)
	Magnesium Sulfate Soundness (A)	Tex-411-A			
	Micro Deval	Tex-461-A			Sample in accordance with Tex-221-F. Testing frequency may be reduced or eliminated based on a satisfactory test history.
	Surface Aggregate Classification (A)	Tex-499-A	Stockpile (B)	1 per project, per source	Verify the published value of the source, as listed on the current Material Producer List for BRSQC, meets the project specifications. If not, sample in accordance with Tex-221-F and submit to CST/M&P for testing prior to use in accordance with Tex-499-A. SiteManager Quality Monitoring test documentation is accomplished by attaching an approved mix design.
COMBINED AGGREGATE	Sand Equivalent	Tex-203-F	Stockpiles, hot bins or feeder belts	1 per project, per source	Sample in accordance with Tex-221-F. The timing of when the test is performed is at the discretion of the Engineer.
ASPHALT BINDER	Compliance with Item 300 Binder & Tack Coat (A) (C)		Sampled, tested and pre-approved by CST/M&P. Project test sampled at the Plant for Binder & Road for Tack Coat	1 each for binder and tack coat per project, per grade, per source	Test a minimum of one sample from production. Sample tack coat at the distributor on the roadway in accordance with Tex-500-C, Part III. Sample binder at hot mix plant in accordance with Tex-500-C, Part II. Binder should arrive on the project pre-approved. If not pre-approved, sample binder before use.
MIX DESIGN	Compliance with applicable specification	Tex-204-F	At source (if not approved)	Min 1 design per Mix Type and Asphalt Grade	Verify that aggregates, recycled asphalt pavement, recycled asphalt shingles, mineral filler, asphalt binder, anti-stripping additives, and warm mix systems are on the Material Producer List where applicable and that they meet project specification requirements. Project sampling and testing may be conducted in individual materials as necessary for control.
COMPLETE MIXTURE	Asphalt Content (%) (A)	Tex-236-F	Engineer Truck Sample (E)	Minimum of 1 per 5,000 tons	Sample in accordance with Tex-222-F. Determine correlation factors for ignition oven using Tex-236-F at a minimum of one per project.
	Voids in Mineral Aggregates (VMA)	Tex-207-F	Truck Sample Plant Produced (E)	1 per 5,000 tons	Sample in accordance with Tex-222-F.
	Gradation (A)	Tex-236-F	Truck Sample	Minimum 1 per 5,000 tons	Sample in accordance with Tex-222-F. Determine correlation factors for ignition oven using Tex-236-F at a minimum of one per project.
	Boil Test	Tex-530-C		1 per project	Sample in accordance with Tex-222-F. The timing of when the test is performed is at the discretion of the Engineer.

This is a guide for minimum sampling and testing.
Testing frequency may need to be increased for high material variability or when test results approach specification limits.

TABLE VII – ASPHALT CONCRETE PAVEMENT (Items 334) (Refer to DMS-9210, "Limestone Rock Asphalt (LRA)," for testing requirements for Item 330.)					
			PROJECT TESTS		
MATERIAL OR PRODUCT	TEST FOR	TEST NUMBER	LOCATION	FREQUENCY (Per Design) (F)	REMARKS
COMPLETE MIXTURE	Moisture Content	Tex-212-F, Part II	Truck Sample	1 per 5,000 tons	Sample in accordance with Tex-222-F. Performed by CST/M&P at the point of production for payment calculations.
	Hydrocarbon-Volatile Content	Tex-213-F		1 per 5,000 tons	Sample in accordance with Tex-222-F. The timing of when the test is performed is at the discretion of the Engineer.
	Lab Molded Density (A)	Tex-207-F		1 per 5,000 tons	Sample in accordance with Tex-222-F.
	Hveem Stability (A)	Tex-208-F		1 per 5,000 tons	Sample in accordance with Tex-222-F. The timing of when the test is performed is at the discretion of the Engineer.
ROADWAY	Ride Quality Test Type B (A)	Tex-1001-S	Final riding surface of travel lanes		Engineer may verify Contractor's results for surface test Type B. For traditional design-bid-build TxDOT projects, CST has contracted with TTI to perform random ride verification at 10% frequency. Results from surface test Type A are not required to be reported.

TABLE VII – FOOTNOTES	
A	When this project acceptance test fails but the product is accepted, document the reasons for acceptance on the Letter of Certification of Materials Used or in the SiteManager Remarks field.
B	Sampling may be performed at the plant, quarry, or both. Aggregate properties may be re-tested at any time during the project.
C	Or as called for in the Specifications.
D	Attach the corresponding QM test report for SiteManager projects to satisfy project sampling and testing requirements.
E	Perform random sampling as specified in Tex-225-F, "Random Selection of Bituminous Mixture Samples."
F	Each test performed that is based on a quantity of material is considered "or fraction thereof" for calculating number of tests.

This is a guide for minimum sampling and testing.
Testing frequency may need to be increased for high material variability or when test results approach specification limits.

TABLE VIII – ASPHALT CONCRETE PAVEMENT (Item 340)					
			PROJECT TESTS		
MATERIAL OR PRODUCT	TEST FOR	TEST NUMBER	LOCATION	FREQUENCY	REMARKS
COARSE AGGREGATE	L. A. Abrasion (A)	Tex-410-A	Stockpile (B)	1 per project, per source	Verify the published value of the source, as listed on the current Material Producer List for BRSQC, meets the project specifications. If not, sample in accordance with Tex-221-F and submit to CST/M&P for testing prior to use in accordance with Tex-499-A. (C)
	Magnesium Sulfate Soundness (A)	Tex-411-A			
	Micro Deval	Tex-461-A	Stockpile (B)	1 per project, per source	Sample in accordance with Tex-221-F. Testing frequency may be reduced or eliminated based on a satisfactory test history.
	Surface Aggregate Classification (A)	Tex-499-A	Stockpile (B)	1 per project, per source	Verify the published value of the source, as listed on the current Material Producer list for BRSQC, meets the project specifications. If not, sample in accordance with Tex-221-F and submit to CST/M&P for testing prior to use in accordance with Tex-499-A. (C)
COMBINED AGGREGATE	Sand Equivalent	Tex-203-F	Stockpiles, hot bins or feeder belts	1 per project, per design	Sample in accordance with Tex-221-F.
ASPHALT BINDER	Compliance with Item 300 Binder & Tack Coat (A)		Sampled, tested and pre-approved by CST/M&P. Plant for Binder & Road for Tack Coat	1 each for binder and tack coat per project, per grade, per source	Test a minimum of 1 sample taken from the project. Sample tack coat at the distributor on the roadway in accordance with Tex-500-C, Part III. Sample binder at hot mix plant in accordance with Tex-500-C, Part II. Binder should arrive on the project pre-approved. If not pre-approved, sample binder before use.
MIX DESIGN	Compliance with applicable specification	Tex-204-F	At source (if not approved)	Min. 1 design per Mix Type and Asphalt Grade	Verify that aggregates, recycled asphalt pavement, recycled asphalt shingles, mineral filler, asphalt binder, anti-stripping additives, and warm mix systems are on the Material Producer List where applicable and that they meet project specification requirements. Project sampling and testing may be conducted in individual materials as necessary for control.
COMPLETE MIXTURE	Asphalt Content (%)	Tex-236-F	Truck Sample (D)	Minimum of 1 per day	Sample in accordance with Tex-222-F. Determine correlation factors for ignition oven using Tex-236-F at a minimum of one per project.
	Voids in Mineral Aggregates (VMA)	Tex-207-F	Truck Sample Plant Produced (D)	1 per day	Sample in accordance with Tex-222-F.
	Gradation (A)	Tex-236-F	Truck Sample	Minimum 1 per day	Sample in accordance with Tex-222-F. Determine correlation factors for ignition oven using Tex-236-F at a minimum of one per project.
	Boil Test	Tex-530-C		1 per project	Sample in accordance with Tex-222-F. Unless waived by the Engineer.
	Indirect Tensile Strength – Dry	Tex-226-F		1 per project, per design	Sample in accordance with Tex-222-F. Unless waived by the Engineer.

This is a guide for minimum sampling and testing.
Testing frequency may need to be increased for high material variability or when test results approach specification limits.

TABLE VIII – ASPHALT CONCRETE PAVEMENT (Item 340)					
			PROJECT TESTS		
MATERIAL OR PRODUCT	TEST FOR	TEST NUMBER	LOCATION	FREQUENCY	REMARKS
COMPLETE MIXTURE	Lab Molded Density (A)	Tex-207-F	Truck Sample	1 per day	Sample in accordance with Tex-222-F.
	Hamburg Wheel Tracker (A)	Tex-242-F		1 per project	Sample in accordance with Tex-222-F. Sample during production.
ROADWAY	Air Voids (A)	Tex-207-F	Selected by the Engineer (D)	1 per day (2 Cores)	Sample in accordance with Tex-222-F.
	Ride Quality Test Type B (A)	Tex-1001-S	Final riding surface of travel lanes		Engineer may verify Contractor's results for surface test Type B. For traditional design-bid-build TxDOT projects, CST has contracted with TTI to perform random ride verification at 10% frequency. Results from surface test Type A are not required to be reported.
FABRIC UNDERSEAL	Compliance with DMS-6220		Sampled, tested, and approved by CST/M&P		Sample in accordance with Tex-735-I. Verify the source is listed on the current Material Producer List for Silt Fence, Filter Fabric, and Fabric Underseals. If not sample and submit to CST/M&P for testing prior to use in accordance with DMS-6220.

TABLE VIII – FOOTNOTES	
A	When this project acceptance test fails but the product is accepted, document the reasons for acceptance on the Letter of Certification of Materials Used or in the SiteManager Remarks field. This letter is required only for Asphalt Content and/or Gradation when production of complete mixture is suspended as required by QC/QA specifications.
B	Sampling may be performed at the plant, quarry, or both. Aggregate properties may be re-tested at any time during the project. These project tests may be used for one or more projects furnishing hot mix with the same aggregate source.
C	Attach the corresponding QM test report for SiteManager projects to satisfy project sampling and testing requirements.
D	Perform random sampling as specified in Tex-225-F, "Random Selection of Bituminous Mixture Samples."

This is a guide for minimum sampling and testing.
Testing frequency may need to be increased for high material variability or when test results approach specification limits.

TABLE IX – MICROSURFACING (Item 350)					
			PROJECT TESTS		
MATERIAL OR PRODUCT	TEST FOR	TEST NUMBER	LOCATION OF SAMPLING	FREQUENCY (Per Design)	REMARKS
AGGREGATE	5-Cycle Magnesium Sulfate Soundness (A)	Tex-411-A	Stockpile (B)	1 per project, per source	Verify the published value of the source, as listed on the current Material Producer list for BRSQC meets the project specifications. If not, sample in accordance with Tex-221-F and submit to CST/M&P for testing at 1 per project, per source. (C)
	Gradation	Tex-200-F, Part II		1 per project, per source	Sample in accordance with Tex-221-F.
	Crushed Face Count	Tex-460-A		1 per project, per source	Sample in accordance with Tex-221-F.
	Acid Insoluble (A)	Tex-612-J		1 per project, per source	Verify the value of the source, as listed on the current BRSQC, meets the project specifications. If not, sample and submit to CST/M&P for testing prior to use in accordance with Tex-499-A. Sample in accordance with Tex-221-F. (C)
	Surface Aggregate Classification	Tex-499-A	Stockpile, or BRSQC (B)	1 per project, per source	Verify the published value of the source, as listed on the current Material Producer list for BRSQC meets the project specifications. If not, sample in accordance with Tex-221-F and submit to CST/M&P for testing at 1 per project, per source. (C)
COMBINED BLEND	Sand Equivalent	Tex-203-F	Stockpile (B)	1 per project, per source	Sample in accordance with Tex-221-F.
ASPHALT BINDER	Compliance with Item 300 Binder & Tack Coat (A)		Sampled, tested, and pre-approved by CST/M&P. Project test sampled at the Plant for Binder & Road for Tack Coat	1 each for binder and tack coat per project, per grade, per source	Test a minimum of one sample during production. Sample tack coat at the distributor on the roadway in accordance with Tex-500-C, Part III. Sample binder at microsurfacing machine in accordance with Tex-500-C, Part III. Binder should arrive on the project pre-approved. If not pre-approved, sample binder before use.
CEMENT	Compliance with DMS-4600				Verify the source is listed on the current Material Producer List for Cement. If not, sample and submit to CST/M&P for testing prior to use in accordance with DMS-4600.
COMPLETE MIX	Asphalt Content	Tex-236-F	During production	1 per day	Sample in accordance with Tex-222-F. Determine correlation factors for ignition oven using Tex-236-F at a minimum of one per project.
	Gradation	Tex-200-F, Part II Tex-236-F			Sample in accordance with Tex-222-F. Determine correlation factors for ignition oven use at a minimum of one per project.

This is a guide for minimum sampling and testing.
Testing frequency may need to be increased for high material variability or when test results approach specification limits.

TABLE IX – FOOTNOTES	
A	When this project acceptance test fails but the product is accepted, document the reasons for acceptance on the Letter of Certification of Materials Used or in the SiteManager Remarks field. This letter is required only for Asphalt Content and/or Gradation when production of complete mixture is suspended as required by QC/QA specifications.
B	Sampling may be performed at the plant, quarry, or both. Aggregate properties may be re-tested at any time during the project. These project tests may be used for one or more projects furnishing hot mix with the same aggregate source.
C	Attach the corresponding QM test report for SiteManager projects to satisfy project sampling and testing requirements.
D	Each test performed that is based on a quantity of material is considered “or fraction thereof” for calculating number of tests.

GEOTECHNICAL ENGINEERING REPORT
PAVEMENT DESIGN RECOMMENDATONS

ROADWAY AT
ESPEJO GATES – COUNTY LINE ROAD
ESPEJO GATES – COUNTY LINE ROAD AND US HIGHWAY 83
ENCINAL, WEBB COUNTY, TEXAS

Prepared for:

S & B Infrastructure, Ltd.
4001 McPherson, Suite 204
Laredo, TX 78041

Attn.: Manuel E. Escamilla, PE, RPLS
Project Engineer

Submitted By:

HOWLAND
ENGINEERING AND SURVEYING CO.

www.howlandcompanies.com
7615 N. Bartlett Avenue | P.O. Box 451128 (78041) | Laredo, TX 78041 | P. 956.722.4411 | F. 956.722.5414
TBPE Firm Registration No. F-4097 | TBPLS Firm Registration No. 100464-00

HOWLAND
ENGINEERING AND SURVEYING CO.

Report No: 35450
February 6, 2015

S & B Infrastructure, Ltd.
4001 McPherson, Suite 204
Laredo, TX 78041

Attn: Manuel E. Escamilla, PE, RPLS
Project Engineer

Sent Via E-Mail to MEEscamilla@sbinfra.com

Subject: **Geotechnical Report – *Pavement Design Recommendations***
Espejo Gates – County Line Road
Espejo Gates – County Line Road and US Highway 83
Encinal, Webb County, Texas

Dear Mr. Escamilla:

Howland Engineering and Surveying Co. (Howland) is pleased to submit the enclosed geotechnical engineering study for the above referenced project to be located in Encinal, Webb County, Texas. This report addresses the field exploration and laboratory testing procedures and results along with our recommendations for site preparation and pavement recommendations for the Espejo Gates – County Line Road roadway improvements.

This report was conducted in accordance with our proposal dated October 16, 2014 and authorized by you.

We appreciate the opportunity to be of service to you in this phase of the project. Please call us if you have any questions or if we may be of further service.

Sincerely,
Howland Engineering and Surveying Co.
TBPE Firm Registration No. F-4097

Roberto P. Martinez, Jr., P.E.
Project Engineer

STATE OF TEXAS
ROBERTO P. MARTINEZ, JR.
87810
LICENSED
PROFESSIONAL ENGINEER

02.06.15

Sergio Galindo, Jr., E.I.T.
Project Manager

Copies Submitted: (1) Above

CONTENTS

Page No.

INTRODUCTION 4

PURPOSE AND SCOPE 4

FIELD INVESTIGATION 4

LABORATORY TESTING 5

GENERAL SITE AND SUBSURFACE CONDITIONS 5

Site Physiography 5
Site Geology 5
Subsurface Stratigraphy 6
Groundwater 7
Potential Vertical Rise (PVR) 8

PAVEMENT RECOMMENDATIONS 9

General 9
Clearing of Existing Pavement Section 9
Preparation of Natural Finish Ground 9
Bulking or Shrinkage Factor 10
Pavement Sections 10
    Flexible Pavement Design 10
    Rigid Pavement Design 16
Drainage Considerations 17

PRELIMINARY UTILITY TRENCHING AND BACKFILL CONSIDERATIONS 18
General 18
Trench Excavations 18
Trench Safety Guidelines 18
Utility Trench Backfill Methods 19

LIMITATIONS 19

APPENDICES

Boring Logs

Soil Boring Location Plan

Photographs

Symbols and Terms used on Boring Logs

Field and Laboratory Testing Procedures

Recommended Specifications for Placement of Compacted Select Fill

DCP Test Data

Pavement Design Options – Computer Program Outputs

Relevant Information About Your Geotechnical Engineering Report

INTRODUCTION

On December 13, 2014, Howland Engineering and Surveying Co. (Howland) conducted a geotechnical investigation for the roadway for Espejo Gates – County Line Road from US Highway 83 to Dimmit / Webb County Line at Encinal, Webb County, Texas. The roadway consists of a county road with a 55′ to 76' wide back to back flexible base (caliche) section approximately ~28,500 LF. The proposed project will consist of an approximate 32' wide edge of asphalt to edge of asphalt pavement section.

The planned construction for the roadway construction will consist of hot mix asphaltic concrete (HMAC) pavement.

PURPOSE AND SCOPE

The purpose of this exploration were to determine the stratification and engineering properties of the soil and to develop recommendations for site preparation and provide pavement recommendations with compaction requirements for the proposed roadway improvements of the above referenced project. Equivalent Single Axle Loads (ESALs) are based on the type of road use as classified by the City of Laredo. Please note a traffic engineering study was beyond this scope of work.

The scope of this exploration includes the following: 1) a field investigation phase for determining the surface conditions (slope & drainage) and subsurface conditions obtaining representative soil samples for classification and testing, 2) a laboratory testing program designed to establish pertinent engineering properties of subsurface soils encountered, and 3) a compilation and evaluation of field and laboratory data in order to develop preliminary pavement recommendations.

FIELD INVESTIGATION

The site was explored by drilling a total of twenty-one (21) 5-ft depth bores along the approximate centerline of the proposed roadways at approximate quarter mile (1,320 LF) intervals. The boring locations were predetermined by Howland Engineering and Surveying Co., Inc. and staked out by S & B Infrastructure, Ltd on a site map provided by them.

The borings were drilled at the approximate locations that are shown on the Boring Location Plan in the appendix. The borings were advanced using a mobile B-53 drilling rig utilizing continuous flight solid stem augers. Samples of the materials encountered were obtained by split barrel sampling in conjunction with automatic standard penetration testing. The test boring logs are presented in the appendix along with descriptions of the test methods. The field sampling and testing were performed in substantial compliance with applicable ASTM standards D-1586.

LABORATORY TESTING

The soil samples were examined and visually classified by the Howland geologist and samples representative of the various soil strata encountered were selected for laboratory testing. Forty-two (42) sets of Atterberg limits, moisture content and percent fines tests were performed to assist in classifying the soils and to provide indicators of soil behavior. The test results are presented on the boring logs and the test procedures are described in the appendix.

GENERAL SITE AND SUBSURFACE CONDITIONS

Site Physiography

The proposed roadway rehabilitation is located on a Espejo-Gates – County Line Road between US Highway 83 extending approximately 28,500 LF to the Dimmit / Webb County Line. The roadway construction is located approximately 12.2 miles south of Catarina, Texas at Encinal, Webb County, Texas west of US Highway 83.

The topography is sloping northeast beginning at the intersection of US Highway 83 and Espejo-Gates – County Line Road with isolated high and low sections throughout the roadway. The approximate elevations range from 643′ to 551′.

Site Geology

Bureau of Economic Geology The University of Texas at Austin

The "Geologic Atlas of Texas", Crystal City-Eagle Pass Sheet, indicates the El Pico Clay, Eep underlie the site with adjacent Alluvium, Qal.

El Pico Clay, Eep, typically consists of clays, in part gypsiferous, interbedded with seams and/or layers of sandstones, coal, and clay, fine grained, argillaceous, silty, thin bedded to massive, friable to indurated. The El Pico Clay is about 700 – 900 feet thick.

Alluvium, Qal, are streambed deposits typically consisting of clay, sands, silts, gravels and organic matter. Such deposits are associated with point bars, cutbanks, oxbows, and abandoned fluvial associated with streambed activity. As a result, soil profiles in low terrace deposits areas may vary considerably within a given area.

A cursory review of available geologic maps of this area indicates that several faults are located in the general area of the site; however, faults in the area of Encinal are considered inactive. Therefore, seismic risk should be noted as low.

Subsurface Stratigraphy

The subsurface Stratigraphy at this site encountered various conditions that can be described by four (4) generalized strata described below. Each stratum has been identified by grouping soils that possess similar physical and engineering characteristics following the guidelines, presented in the ASTM D-2487 (Unified Soil Classification System). The lines designating the interfaces between strata on the boring logs represent approximate boundaries.

- *Lean Clay with Sand, Sandy Lean Clay* – Stiff, very stiff, stiff to very stiff, firm to hard, brown to reddish brown, greyish, reddish brown to light brown, brown, light brown, light brown to olive brown, light brown to yellowish brown, yellowish brown and greyish, light brown to brown, dark greyish lean clay with sand and sandy lean clay soils were encountered at various depths in all bores except P-5 and P-16.

  The soil samples tested from these stratums had liquid limits ranging from 27 to 49, plasticity index ranging from 11 to 27 with fines fractions ranging from 52% to 84%. This soil is classified as medium to high plasticity, CL, soils under the Unified Soil Classification System.

  The consistency of these stratums are firm to hard based on automatic standard penetration resistance test values of 6 blows per foot of penetration to 35 blows per foot of penetration.

- *Fat Clay* – Stiff, very stiff, firm, olive brown, light brown, fat clay soils were encountered at various depths in bores P-14, P-16, P-18 and P-19.

  The soil samples tested from these stratums had a liquid limits ranging from 54 to 59, plasticity index ranging from 31 to 35 with fines fractions ranging from 85% to 96%. This soil is classified as high plasticity, CH, soils under the Unified Soil Classification System.

  The consistency of these stratums are firm to very stiff based on automatic standard penetration resistance test values of 8 blows per foot of penetration to 24 blows per foot of penetration.

- *Silty, Clayey Sand and Silty, Clayey Sand with Gravel* – Medium dense, very dense, light brown, dark brown silty, clayey sand and silty, clayey sand with gravel soils were encountered from the surface to bore termination (~5') at P-5, and at the approximate 2' depth to bore termination (~5') at bores P-3 and P-12.

  The soil samples tested from these stratums had liquid limits ranging from 20 to 23, plasticity index ranging from 5 to 7 and fines fractions of 35% to 48%. These soils are classified as low plasticity, SC-SM, clays under the United Soil Classification System.

  The consistency of these stratums are medium dense to very dense based on automatic standard penetration resistance test values of 15 blows per foot of penetration to 68 blows per foot of penetration.

- *Clayey Sand with Gravel* – Loose, light brown, clayey sand with gravel soils were encountered at P-20 from the surface to the approximate 2' depths.

  The soil samples tested from this stratum had a liquid limit of 32, plasticity index of 15 with fines fractions of 47%. This soil is classified as medium plasticity, SC, soils under the Unified Soil Classification System.

  The consistency of this stratum is loose based on automatic standard penetration resistance test values of 9 blows per foot of penetration.

The above descriptions are generalized to highlight the major subsurface stratification. The boring logs should be consulted for specific information at each boring location.

Existing pavement section and thickness of the materials are as follows:

Bore No.	Existing Pavement Section	Bore No.	Existing Pavement Section
1	1"	12	3"
2	1"	13	3 ½"
3	1"	14	0"
4	2"	15	1 ½"
5	3"	16	0"
6	10"	17	0"
7	2"	18	12"
8	0"	19	1"
9	2"	20	10"
10	1 ½"	21	1"
11	3 ½"		

Please note the existing pavement section consists of flexible base material (Caliche).

Groundwater

Groundwater was not encountered during the drilling operations. The recovered soil samples contained generally dry soil moisture conditions during our subsurface investigation.

It should be noted that groundwater levels usually will fluctuate with seasonal variations in rainfall, during the construction process and surface water run-off. The short-term field observations are not a complete evaluation of the subsurface water levels at this location. The Contractor should check the subsurface water conditions prior to excavation activities.

Potential Vertical Rise (PVR)

Potential vertical soil movements have been estimated using the Texas Department of Transportation test method TEX-124-E, Potential Vertical Rise. This method utilizes the soils in-situ moisture conditions and plasticity characteristics within the active zone. It is estimated that depth of the active zone in this area is approximately twenty (20) feet. The potential vertical rise is expressed in inches and hence is the latent or potential ability of a soil material to swell, at a given density, moisture, and loading condition.

When the soil material is exposed to capillary or surface water an increase in elevation (heave) of the upper surface along with anything resting on it is plausible. The soils encountered at the site exhibit a low to medium shrink / swell potential with isolated high shrink / swell potential at the fat clay soil locations. Estimated PVR values are as follows:

Bore No.	Estimated PVR (in)
1	0.23″
2	0.70″
3	0.18″
4	0.31″
5	0.00″
6	0.37″
7	0.37″
8	1.48″
9	0.88″
10	0.78″
11	0.53″
12	0.47″
13	0.66″
14	1.32″
15	1.48″
16	1.86″
17	0.96″
18	1.48″
19	1.38″
20	0.66″
21	1.16″

Please note the analysis is based on approximate depth of bores

Please note that the above reported values represent total vertical in-situ movements and does not take into account movements by uncontrolled water sources such as poor drainage, migration of subsurface water from off-site locations and utility line leaks.

PAVEMENT RECOMMENDATIONS

General

The following recommendations are based the American Association of State Highway and Transportation Officials (AASHTO) Guide for Design of Pavement Structures, Equivalent Single Axel Load (ESAL) Calculation Study by AC Group, LLC, the soil test results and our experience with pavements in areas with similar subsoil conditions. The minimum pavement section we recommend for Espejo Gates – County Line Road is discussed in the following.

Clearing of Existing Pavement Section

The roadway improvements of Espejo Gates – County Line Road will consist of removing the existing pavement section. The existing pavement section consists of a varied depths of flexible base "caliche" with thicknesses ranging from no flexible base to 12". Howland recommends to cut and stock-pile the pit run "caliche" material throughout the roadway. This material may be reused should it meet the requirements of the TxDOT specifications for Item 247, Type B, Grade 2 with a minimum PI of 5 and a maximum PI of 12, if governed by design option.

Subgrade Preparation

The preparation of natural finish ground in areas cut should consist should initially consist of reworking the exposed surface to the 10" depth by watering and re-compacting the soils to a minimum of 95% of the TxDOT Method TEX 114-E, at ± 2% of the optimum moisture content at 6" lifts or less.

Sub-base Preparation

The preparation of natural finish ground in areas to be filled should consist of reworking the surface to the 10" depth by watering and re-compacting the soils to a minimum of 95% of the TxDOT Method TEX 114-E, at ± 2% of the optimum moisture content at 6" lifts.

The soil compaction for the select fill shall be placed in compacted lifts not to exceed 6" in thickness and should not be less than 95 % of maximum dry density determined in accordance with TxDOT Method TEX 114-E at ± 2 % of optimum moisture content. Any fill material lifts not meeting the required compaction specification must be reworked and compacted until the specified density is achieved.

Select fill needed for the pavement section should be low plasticity sandy lean clay, clayey sand, or granular base material ($7 \leq PI \leq 20$). Specifications for fill and placement are attached.

As per our understanding of the project, the project may require minor cut and fill material.

Bulking or Shrinkage Factor

Excavation increases the volume of material. To determine the volume of material that will be created by excavation the bulking factor is defined as:

Bulking Factor = Volume after Excavation / Volume before Excavation

Similarly a shrinkage factor is defined for the compaction of a soil at its final destination.

Shrinkage Factor = Volume after Compaction / Volume before Excavation

Typical values for the site soils can be found in Table 1 below.

Table 1 – Soil Properties

Material	Bulk Density Mg/m^3	Bulking Factor	Shrinkage Factor	Diggability
Clay (Low PI)	1.65	1.30	-	Medium
Clay (High PI)	2.10	1.40	0.90	Medium to Hard
Clay and Gravel	1.80	1.35	-	Medium to Hard
Sand	2.00	1.05	0.89	Easy
Sand and Gravel	1.95	1.15	-	Easy
Sandstone (Porous)	2.50	1.60	-	Medium

Pavement Sections

For the proposed roadway design purpose, we are following the AASHTO guide for Design of Pavement Structures with consideration to the modulus of subgrade reaction (k), our field Standard Penetration Test (SPT) and Dynamic Cone Penetration (DCP) results which we correlated an approximate CBR and the pavement specification.

Flexible Pavement Design

The 1993 AASHTO pavement design method is typically used in this location. The AASHTO design parameters include the following:

AASHTO Design Parameters Index	
18-kip Equivalent Single Axle Loads (ESAL)	W_{18}
Reliability	R
Standard Deviation	S_o
Environmental Effects	$\Delta PSI_{ENV}=\Delta PSI_{SW}+\Delta PSI_{FH}$
Loss in Serviceability Index Due to Swelling Soils	ΔPSI_{SW}
Loss in Serviceability Index Due to Frost Heave	ΔPSI_{FH}
Initial Serviceability Index	P_O
Minimum Terminal Serviceability Index	P_t
Total Change in Serviceability Index	$\Delta_{PSI}=P_O-P_t$
Effective Road Bed Soil Resilient Modulus	M_r

Espejo Gates – County Line Road can be considered a Major / Minor Arterials Industrial Collector on a City of Laredo Long Range Thoroughfare Plan (COLLRTP) as per AC Group, LLC dated January 14, 2015.

As per our understanding, the ESAL amount considered for the following pavement design was based on a 20% Growth Rate with a calculated ESAL of 3,125,135 for a 20-Year Life Span.

Values for these parameters except for Environmental Effects and Subgrade Resilient Modulus are include in the COLLRTP and are presented below. Recommendations for the Environmental Effects and Subgrade Resilient Modulus along with other pertinent information are presented in the following paragraphs.

AASHTO Design Parameters								
COLLRTP								
	Major / Minor Arterials Industrial Collector		Major Collector Industrial Street		Local Collector		Local Street	
W_{18}	3,000,000		2,000,000		1,000,000		100,000	
R	95 %		90 %		70 %		70 %	
S_O	Flexible	Rigid	Flexible	Rigid	Flexible	Rigid	Flexible	Rigid
	0.45	0.35	0.45	0.35	0.45	0.35	0.45	0.35
P_O	4.2	4.5	4.2	4.5	4.2	4.5	4.2	4.5
P_t	2.5	2.5	2.5	2.5	2.5	2.5	2.0	2.0
Δ_{PSI}	1.7	2.0	1.7	2.0	1.7	2.0	2.2	2.5
T	20		20		20		20	
SN	Min.	Max.	Min.	Max.	Min.	Max.	Min.	Max.
	3.80	5.76	2.92	5.08	2.58	4.20	1.98	3.18

Source: City of Laredo Long Range Thoroughfare Plan (COLLRTP)

The actual traffic volumes and wheel loads for these various pavements were based upon the ESAL Calculation Study by AC Group, LLC dated January 14, 2015.

The value of ΔPSI_{SW} is the portion of design serviceability loss caused by the environmental (ΔPSI_{ENV}) factors of swelling soils. Since frost heave is not a concern in Encinal, the impact due to frost heave (ΔPSI_{FH}) is not considered. Therefore, the environmental impacts (ΔPSI_{ENV}) are reduced to the impact of expansive (swelling) soils only. **If the roadbed soils having a PI over 20 are treated by mentioned recommendation, then environmental factors from expansive soils would not apply for this site.**

The environmental factors reduce the maximum possible performance period of the pavement before an overlay is required to meet the expected service life. Based on the AASHTO design procedure and the subsurface soil properties, the value for the loss in Serviceability Index due to swelling soils (ΔPSI_{SW}) is presented in the following table:

Time (years)	**ΔPSI_{SW}**
0	0
5	0.50
10	0.78
15	0.95
20	1.04

Modulus of Subgrade Reaction (k)

The modulus of subgrade reaction (k) is determined by performing plate load bearing tests. Due to time and expense of performing test, researchers have developed correlations between k and CBR values. Based on these published correlations, an estimated k value of 125 per cubic inch (pci) for the subgrade may be used for this site.

Resilient Modulus Value (M_r)

The resilient modulus value, M_r is based on the most common subgrade soil conditions encountered in our soil test borings. Based on AASHTO recommendations, the following empirical strength values can be converted to a Modulus for use in pavement thickness calculations. We recommend that a CBR value of about 8 percent to be used in the pavement design analysis for the soils at the site.

$$M_r = 2550\ (CBR)^{0.64} \qquad \text{psi}$$

Therefore, for this project we recommend the following M_r values:

$$M_r = 2550\ (8)^{0.64} \qquad 9{,}649 \text{ psi}$$

The next step in the AASHTO method is the determination of the Structural Number (SN), which can either be calculated using formulas in the AASHTO Guide or by using a nomograph contained in the guide. The SN is used to determine the required pavement sections.

The total required pavement thickness is then based on the following equation:

$$SN = a_1*D_1*m_1+a_2*D_2*m_2+a_3*D_3*m_3+\ldots a_n*D_n*m_n$$

Where:

a_n = structural coefficient of material "n"

D_n = thickness of material "n", inches

m_n = drainage coefficient for material "n"

Generally, the most cost effective pavement section can be obtained by maximizing the thicknesses of the materials with the lowest structural coefficient where applicable or where the pavement materials are locally available.

The drainage coefficient, m, is dependent on the quality of drainage in the untreated base and sub-base material layers of the flexible pavement section. Good drainage (i.e. Drainage Coefficient, m = 1) corresponds to water being removed from each layer in one (1) day; and, that the percent of time the pavement structure is exposed to moisture levels approaching saturation ranges from five (5) to twenty-five (25). If improper materials are used or standing water can develop due to construction or design deficiencies, the quality of drainage would be fair to very poor and reduce the drainage coefficient, m, and ultimately the structural capacity of the pavement. The AASHTO design procedure provides more guidance and discussion regarding this issue.

Recommended structural coefficient and drainage coefficients are as follows:

Material Type	Structural Coefficient	Drainage Coefficient
Type C (Coarse) or D (Fine) HMAC Surface	0.44	1.00
Type A (Coarse) or B (Fine) HMAC Base	0.34	1.00
Flexible Base (Type A, Grade 2)	0.14	1.00
Flexible Base (Type B, Grade 2)	0.11	1.00

Resulting pavement sections are as follows:

Roadway Design

Component	Flexible Base Section			
	3.5" HMAC – PI < 20		***3.5" HMAC – PI ≥ 20***	
	Crushed Limestone	***Pit Run "Caliche"***	***Crushed Limestone***	***Pit Run "Caliche"***
HMAC Surface	3.5"	3.5"	3.5"	3.5"
HMAC Base Ty. B	No	No	No	No
Flexible Base Ty. A Gr. 2	18″	No	12″	No
Flexible Base Ty. B Gr. 2	No	23"	No	11" / 6"*
Geogrid	No	No	Yes	Yes
Moisture Condition	10"	10"	10"	10"
SN Design	4.03	4.03	4.04	4.03
SN Actual	4.06	4.07	4.06	4.06
Estimate ESALs	3,250,000	3,301,000	3,250,000	3,245,000

*Please note minimum pavement section of 3.5" HMAC and the minimum pavement section for soils with PI>20. * - Denotes thickness of material separated by Geogrid; 6" of flexible base Type B, Grade 2 is placed with the Geogrid laid over and finally the 11" of flexible base Type B, Grade 2.*

Component	**Flexible Base Section**			
	4.0" HMAC – PI < 20		***4.0" HMAC – PI ≥ 20***	
	Crushed Limestone	***Pit Run "Caliche"***	***Crushed Limestone***	***Pit Run "Caliche"***
HMAC Surface	4"	4"	4"	4"
HMAC Base Ty. B	No	No	No	No
Flexible Base Ty. A Gr. 2	16.5″	No	10.5″	No
Flexible Base Ty. B Gr. 2	No	21"	No	9" / 6"*
Geogrid	No	No	Yes	Yes
Moisture Condition	10"	10"	10"	10"
SN Design	4.03	4.03	4.04	4.04
SN Actual	4.07	4.07	4.07	4.04
Estimate ESALs	3,301,000	3,301,000	3,301,000	3,149,000

*Please note minimum pavement section of 4" HMAC and the minimum pavement section for soils with PI>20. * - Denotes thickness of material separated by Geogrid; 6" of flexible base Type B, Grade 2 is placed with the Geogrid laid over and finally the 9" of flexible base Type B, Grade 2.*

Hot Mix Asphaltic Concrete Surface: The Hot Mix Asphaltic Concrete (HMAC) shall meet the requirements set forth by the Texas Department of Highways (TxDOT) Specifications, Item 340, using Type "C" or "D" mix. The asphaltic concrete should be compacted to a minimum of 1.5% below the optimum density of the laboratory density as determined using TxDOT, Tex 206-F test method or ASTM D-1560 (Hveem or Marshall Method).

Flexible Base (Crushed Limestone): The base should meet the requirements of the TxDOT specifications for Item 247, Type A, Grade 2. The base should be compacted to at least 98% of the maximum dry density as determined by TxDOT Method TEX 113-E, at ± 2% of optimum moisture content.

Flexible Base Material (Pit Run): The base should meet the requirements of the TxDOT specifications for Item 247, Type B, Grade 2. The base should be compacted to at least 98% of the maximum dry density as determined by TxDOT Method TEX 113-E, at ± 2 % of optimum moisture content.

Mechanically Stabilized Layer (MSL): The geogrid can increase the effective strength of a pavement structure or an unpaved working surface through the composite of a high performance geogrid and granular fill to form a mechanically stabilized layer (MSL). The geogrid is placed directly below the granular fill for reinforcement in an effort to increase the bearing strength of the subbase soils. Based on the soil information above, we recommend the Tensar® TriAx® TX5 or TerraGrid® RX1200.

Moisture Conditioned Subgrade: The subgrade should be moisture conditioned by reworking the surface to the 10" depth by watering and re-compacting the soils to a minimum of 95% of the maximum dry density as determined by TxDOT Method TEX 114-E, at ± 2% of the optimum moisture content at 6" lifts.

In addition, below is Espejo Gates – County Line Road further identified by the pavement sections based on their Plasticity Index (PI):

Pavement Section Reference ***(PI ≥ 20)***
Between bores B-8 thru B-9
Between bores B-12 thru B-13
Between bores B-15 thru B-16
Between bores B-18 thru B-19
B-21

Refer to the Bore Location Map in the report.

Rigid Pavement

As per our understanding, rigid pavement design is planned for intersections or where specified by the Engineer. The roadway will include 745 tractor/trailers per day, seven (7) days a week. Based on our understanding, the owners would like to consider a 20-yr design life with 20% Growth Rate.

The Rigid Structural Design is used for both the analysis and design of rigid (Portland cement concrete) pavements. For design, Equivalent Single Axle Load, (ESALs) are an input and the slab thickness required for the specified traffic is calculated. All calculations are based on the American Association of State Highway and Transportation Officials (AASHTO) rigid pavement design procedure.

The most commonly used equivalent load in the U.S. is the 18,000 lb (80 kN) equivalent single axle load, normally designated as ESAL. A tractor / trailer typically has two (2) tandem axles and one (1) single axle. Based on typical load equivalency factors from AASHTO, the following is the total ESAL for each tractor / trailer: 3.92 ESAL.

<u>20-YR Design Life</u>

AASHTO Design Parameters	
Pavement Parameters	***20-YR Design***
18-Kip ESALs Over Initial Performance Period	3,125,135
Concrete Compressive Strength (f'_c)	4,000 psi
Modulus of Rupture (MOR) = 7.5 * $(f'_c)^{1/2}$	474
28-day Mean Elastic Modulus of Slab	3,604,997 psi
Standard Modulus of Soil Reaction "k"	125 pci
Load Transfer Coefficient	2.6
Overall Drainage Coefficient, Cd	1
	Calculated
Design Thickness	8.5 in

18-Kip ESALs Over Initial Performance Period based on the ESAL Calculation Study by AC Group, LLC dated January 14, 2015.

Portland Cement Concrete: The concrete should be air entrained to result in 3% ± 1% and should have a maximum slump of 4½" ± 1". The concrete should have a minimum 28-day compressive strength of 4,000 psi.

Moisture Conditioned Subgrade: The subgrade should be moisture conditioned by reworking the surface to the 10" depth by watering and re-compacting the soils to a minimum of 95 % of the maximum dry density as determined by TxDOT Method TEX 114-E, at ± 2 % of the optimum moisture content.

The design assumes doweled or keyed joints, temperature and flexural reinforcing steel of #5 @ 12" o.c. for heavy duty traffic and adequate control, expansion and construction joints. All joints should be sealed as per manufacture recommendations. A control joint spacing of no more than 15' is recommended. Since rainfall is light, no special provisions for drainage, such as permeable base course is necessary.

Drainage Considerations

Proper perimeter drainage is extremely important and should be provided so infiltration of surface water from unpaved areas surrounding the pavement is minimized. Improper drainage which allows saturation of the pavement subgrade will greatly reduce the performance and service life of the pavement systems, even when the system is constructed using either typical pavement sections or design recommendations based on site-specific soils testing.

Surface and subsurface drainage considerations crucial to the performance of pavements at this site include, but are not limited, to the following:

- Any man-made subsurface or known natural groundwater seepage at the site as to influence moisture contents within the subgrade should be intercepted by drainage ditches or below grade French drains.
- Final site grading should eliminate isolated depressions adjacent to curbs which may allow surface water to pond and infiltrate into the underlying soils.
- Pavement surfaces should be maintained to minimize surface ponding and to provide proper sealing of any developing cracks. These measures will help reduce infiltration of surface water downward through the pavement section.
- Drainage channels adjacent to roadway should have adequate transverse slopes for proper drainage away from the roadway so that ponding or stagnant water does not accumulate and infiltrate below the roadway thus weakening the sub-pavement section.

Poor drainage features provide an avenue for water to enter into the pavement section and underlying soil subgrade and can result in weakening of the subgrade soils. These conditions could result in degradation of pavement sections with time as vehicular traffic traverses the affected areas.

PRELIMINARY UTILITY TRENCHING AND BACKFILL CONSIDERATIONS

General

In general, the exploration and testing of the soil samples indicated a consistency of soil conditions with low to high plasticity, firm to hard, or loose to very dense, lean clay with sand, sandy lean clay, silty, clayey sand, silty, clayey sand with gravel, clayey sand with gravel, and fat clay soils.

This report may not reflect the exact variations of the subsurface conditions throughout the site. The nature and extent of variations across the site may not become evidence until construction commences. If variations then appear evident, it may be essential to reevaluate our recommendations after performing on-site observations and test to establish the engineering significance of such variations.

Trench Excavations

In regard to groundwater conditions, no groundwater was encountered during our drilling operations. Due to the long distance spacing between boreholes, the extent of subsurface groundwater depth and locations between our borings is not certain.

However the Contractor should provide and maintain adequate dewatering equipment to remove and dispose of all surface and ground water. Each excavation should be kept dry during the preparation of the subgrade until the installation of the utility lines is completed. The utility trenching, safety and backfill considerations for the proposed roadways are included in the following section.

Trench Safety Guidelines

Occupational Safety and Health Administration (OSHA) Safety and Health Standards contained in the Section 1926.652 of Title 29, Code of Federal Regulations (29 CFR) require that all trenches in excess of five (5) feet deep be shored or appropriately sloped or benched unless the trench sidewalls are comprised of solid rock.

Based on the our laboratory results, the soils encountered at the boring locations should be considered primarily a *Type A* soils which means cohesive soils i.e. silty clay, sandy clay, clay loam, and in some cases silty loam and sandy clay loam.

If during the construction process dissimilar soils are encountered, then the following soil types should be considered. Cemented soils i.e. caliche and hardpan are also considered *Type A* according to OSHA soil classification guidelines.

If soils are granular cohesion-less similar to crushed rock or fissured then *Type B* is the appropriate classification and if groundwater or water seepage is present in these strata then *Type C* is the appropriate classification.

Please note that the Contractor is responsible for development of the excavation plan which will meet all State and Federal requirements with regard to trench safety.

Utility Trench Backfill Methods

The design team is to verify if the City of Encinal has adopted a method to backfill utility trenches at date of design insurance.

LIMITATIONS

The evaluation and recommendations submitted in this report are based, in part, upon the information obtained from the twenty-one (21) soil test borings. The nature and extent of variations in soil conditions between or beyond the borings may not become evident until actual construction. It is also noted that the transition lines shown on the boring logs are approximate and the actual transitions may be gradual. Also, this report does not consider environmental opinions.

If changes in the nature or design of the project are planned, the conclusions and recommendations in this report should be reviewed by the soils engineer and, if necessary, modified. Soil samples recovered for laboratory testing will be retained for a period of 30 days and then, unless we are directed otherwise, will be discarded.

This report has been prepared for the exclusive use of S & B Infrastructure, Ltd. and their design team for specific application to the roadway rehabilitation at Espejo Gates – County Line Road in Encinal, Webb County, Texas in general accordance with the American Association of State Highway and Transportation Officials (AASHTO) Guide for Design of Pavement Structures. No other warranty, expressed or implied, is made. Additional information regarding the limitations and use of geotechnical engineering reports is included in the appendix.

LOG OF BORING NUMBER P-1

PROJECT:	Espejo Gates - County Line Road	REPORT NO.:	35450
CLIENT:	S & B Infrastructure, Ltd.	DATE:	December 13, 2014
PROJECT LOCATION:	Espejo Gates - County Line Road		
BORING LOCATION:	As Per Plan		
DRILLER:	Hugo Rendon	ELEVATION:	NA
DRILLING METHOD:	Straight Flight Auger	WEATHER:	Sunny and Cool
		LOGGED BY:	J. Reyes
DEPTH TO WATER INITIAL:	NE	AFTER 24 HOURS:	NR

Depth (Feet)	Samples	N / (QP)	Soil Symbol	Description of Stratum 1" Flexible Base	Minus 200 (%)	Moisture Content (%)	Atterberg Limits (%) Liquid Limit L.L.	Plastic Limit P. L.	Plastic. Index P. I.	qu (TSF)	UNIT DRY WT (PCF)
1	P1	6		Stiff, Brown to Reddish Brown Sandy Lean Clay							
2		6 6		(CL)	61	10	32	16	16		
3				Very Stiff, Greyish Sandy Lean Clay							
4	P2	4									
5		7 9		(CL)	64	17	28	15	13		
6				BORING TERMINATED							
7											
8											
9											
10											
11											
12											
13											
14											
15											
16											
17											
18											
19											
20											

P = Standard Penetration Resistance (BL/FT) NE = Not Encountered NA = Not Applicable
Qp = Pocket Penetrometer Test (TSF) NR = Not Required ND = Not Determined
qu = Unconfined Compressive Strength Test
ST = Shelby Tube Sample

HOWLAND ENGINEERING AND SURVEYING CO.

LOG OF BORING NUMBER P-2

PROJECT:	Espejo Gates - County Line Road	REPORT NO.:	35450
CLIENT:	S & B Infrastructure, Ltd.	DATE:	December 13, 2014
PROJECT LOCATION:	Espejo Gates - County Line Road		
BORING LOCATION:	As Per Plan		
DRILLER:	Hugo Rendon	ELEVATION:	NA
DRILLING METHOD:	Straight Flight Auger	WEATHER:	Sunny and Cool
		LOGGED BY:	J. Reyes
DEPTH TO WATER INITIAL:	NE	AFTER 24 HOURS:	NR

Depth (Feet)	Samples	N / (QP)	Soil Symbol	Description of Stratum	Minus 200 (%)	Moisture Content (%)	Atterberg Limits (%) Liquid Limit L.L.	Plastic Limit P. L.	Plastic. Index P. I.	qu (TSF)	UNIT DRY WT (PCF)
				1" Flexible Base							
1	P1	3		Stiff to Very Stiff, Reddish Brown to Light Brown Sandy Lean Clay with Calcareous Deposits							
2		4			67	12	31	16	15		
		5									
3											
4	P2	5									
		10									
5		13		(CL)	61	13	34	17	17		
6				BORING TERMINATED							
7											
8											
9											
10											
11											
12											
13											
14											
15											
16											
17											
18											
19											
20											

P = Standard Penetration Resistance (BL/FT) NE = Not Encountered NA = Not Applicable
Qp = Pocket Penetrometer Test (TSF) NR = Not Required ND = Not Determined
qu = Unconfined Compressive Strength Test
ST = Shelby Tube Sample

HOWLAND ENGINEERING AND SURVEYING CO.

LOG OF BORING NUMBER P-3

PROJECT:	Espejo Gates - County Line Road	REPORT NO.:	35450
CLIENT:	S & B Infrastructure, Ltd.	DATE:	December 13, 2014
PROJECT LOCATION:	Espejo Gates - County Line Road		
BORING LOCATION:	As Per Plan		
DRILLER:	Hugo Rendon	ELEVATION:	NA
DRILLING METHOD:	Straight Flight Auger	WEATHER:	Sunny and Cool
		LOGGED BY:	J. Reyes
DEPTH TO WATER INITIAL:	NE	AFTER 24 HOURS:	NR

Depth (Feet)	Samples	N / (QP)	Soil Symbol	Description of Stratum 1" Flexible Base	Minus 200 (%)	Moisture Content (%)	Atterberg Limits (%) Liquid Limit L.L.	Plastic Limit P. L.	Plastic. Index P. I.	qu (TSF)	UNIT DRY WT (PCF)
1	P1	6		Stiff, Brown Sandy Lean Clay							
2		6		(CL)	63	12	30	17	13		
3				Medium Dense, Light Brown Silty, Clayey Sand with Gravel							
4	P2	6									
5		7									
		8		(SC-SM)	44	9	22	15	7		
6				BORING TERMINATED							
7											
8											
9											
10											
11											
12											
13											
14											
15											
16											
17											
18											
19											
20											

P = Standard Penetration Resistance (BL/FT) NE = Not Encountered NA = Not Applicable
Qp = Pocket Penetrometer Test (TSF) NR = Not Required ND = Not Determined
qu = Unconfined Compressive Strength Test
ST = Shelby Tube Sample

HOWLAND ENGINEERING AND SURVEYING CO.

LOG OF BORING NUMBER P-4

PROJECT:	Espejo Gates - County Line Road	REPORT NO.:	35450
CLIENT:	S & B Infrastructure, Ltd.	DATE:	December 13, 2014
PROJECT LOCATION:	Espejo Gates - County Line Road		
BORING LOCATION:	As Per Plan		
DRILLER:	Hugo Rendon	ELEVATION:	NA
DRILLING METHOD:	Straight Flight Auger	WEATHER:	Sunny and Cool
		LOGGED BY:	J. Reyes
DEPTH TO WATER INITIAL:	NE	AFTER 24 HOURS:	NR

Depth (Feet)	Samples	N / (QP)	Soil Symbol	Description of Stratum 2" Flexible Base	Minus 200 (%)	Moisture Content (%)	Atterberg Limits (%) Liquid Limit L.L.	Plastic Limit P. L.	Plastic. Index P. I.	qu (TSF)	UNIT DRY WT (PCF)
1	P1	4 6 7		Stiff, Greyish Sandy Lean Clay (CL)	61	15	34	17	17		
2											
3	P2	5 6 8		Stiff, Light Brown Sandy Lean Clay with Calcareous Particles (CL)	63	13	27	16	11		
4											
5											
6				BORING TERMINATED							
7											
8											
9											
10											
11											
12											
13											
14											
15											
16											
17											
18											
19											
20											

P = Standard Penetration Resistance (BL/FT) NE = Not Encountered NA = Not Applicable
Qp = Pocket Penetrometer Test (TSF) NR = Not Required ND = Not Determined
qu = Unconfined Compressive Strength Test
ST = Shelby Tube Sample

HOWLAND ENGINEERING AND SURVEYING CO.

LOG OF BORING NUMBER P-5

PROJECT:	Espejo Gates - County Line Road	REPORT NO.:	35450
CLIENT:	S & B Infrastructure, Ltd.	DATE:	December 13, 2014
PROJECT LOCATION:	Espejo Gates - County Line Road		
BORING LOCATION:	As Per Plan		
DRILLER:	Hugo Rendon	ELEVATION:	NA
DRILLING METHOD:	Straight Flight Auger	WEATHER:	Sunny and Cool
		LOGGED BY:	J. Reyes
DEPTH TO WATER INITIAL:	NE	AFTER 24 HOURS:	NR

Depth (Feet)	Samples	N / (QP)	Soil Symbol	Description of Stratum	Minus 200 (%)	Moisture Content (%)	Atterberg Limits (%) Liquid Limit L.L.	Plastic Limit P. L.	Plastic. Index P. I.	qu (TSF)	UNIT DRY WT (PCF)
				3" Flexible Base							
1		11									
	P1	12		Medium Dense, Light Brown							
2		14		Silty, Clayey Sand with Gravel	35	7	20	15	5		
				and Calcareous Deposits							
3											
4		8									
	P2	8									
5		9		(SC-SM)	46	8	23	16	7		
				BORING TERMINATED							
6											
7											
8											
9											
10											
11											
12											
13											
14											
15											
16											
17											
18											
19											
20											

P = Standard Penetration Resistance (BL/FT) NE = Not Encountered NA = Not Applicable
Qp = Pocket Penetrometer Test (TSF) NR = Not Required ND = Not Determined
qu = Unconfined Compressive Strength Test
ST = Shelby Tube Sample

HOWLAND ENGINEERING AND SURVEYING CO.

LOG OF BORING NUMBER P-6

PROJECT:	Espejo Gates - County Line Road	REPORT NO.:	35450
CLIENT:	S & B Infrastructure, Ltd.	DATE:	December 13, 2014
PROJECT LOCATION:	Espejo Gates - County Line Road		
BORING LOCATION:	As Per Plan		
DRILLER:	Hugo Rendon	ELEVATION:	NA
DRILLING METHOD:	Straight Flight Auger	WEATHER:	Sunny and Cool
		LOGGED BY:	J. Reyes
DEPTH TO WATER INITIAL:	NE	AFTER 24 HOURS:	NR

Depth (Feet)	Samples	N / (QP)	Soil Symbol	Description of Stratum 10" Flexible Base	Minus 200 (%)	Moisture Content (%)	Atterberg Limits (%) Liquid Limit L.L.	Plastic Limit P. L.	Plastic. Index P. I.	qu (TSF)	UNIT DRY WT (PCF)
1		4									
	P1	5		Stiff, Light Brown Sandy Lean							
2		6		Clay with Calcareous Deposits	67	16	29	16	13		
3											
4		4									
	P2	5									
5		8		(CL)	60	12	29	16	13		
				BORING TERMINATED							
6											
7											
8											
9											
10											
11											
12											
13											
14											
15											
16											
17											
18											
19											
20											

P = Standard Penetration Resistance (BL/FT) NE = Not Encountered NA = Not Applicable
Qp = Pocket Penetrometer Test (TSF) NR = Not Required ND = Not Determined
qu = Unconfined Compressive Strength Test
ST = Shelby Tube Sample

HOWLAND ENGINEERING AND SURVEYING CO.

LOG OF BORING NUMBER P-7

PROJECT:	Espejo Gates - County Line Road	REPORT NO.:	35450
CLIENT:	S & B Infrastructure, Ltd.	DATE:	December 13, 2014
PROJECT LOCATION:	Espejo Gates - County Line Road		
BORING LOCATION:	As Per Plan		
DRILLER:	Hugo Rendon	ELEVATION:	NA
DRILLING METHOD:	Straight Flight Auger	WEATHER:	Sunny and Cool
		LOGGED BY:	J. Reyes
DEPTH TO WATER INITIAL:	NE	AFTER 24 HOURS:	NR

Depth (Feet)	Samples	N / (QP)	Soil Symbol	Description of Stratum 2" Flexible Base	Minus 200 (%)	Moisture Content (%)	Atterberg Limits (%) Liquid Limit L.L.	Plastic Limit P. L.	Plastic. Index P. I.	qu (TSF)	UNIT DRY WT (PCF)
1		8									
	P1	13		Very Stiff, Light Brown Sandy							
2		14		Lean Clay with Calcareous Deposits	68	9	28	17	11		
3											
4		9									
	P2	10									
5		13		(CL)	62	8	29	16	13		
				BORING TERMINATED							
6											
7											
8											
9											
10											
11											
12											
13											
14											
15											
16											
17											
18											
19											
20											

P = Standard Penetration Resistance (BL/FT) NE = Not Encountered NA = Not Applicable
Qp = Pocket Penetrometer Test (TSF) NR = Not Required ND = Not Determined
qu = Unconfined Compressive Strength Test
ST = Shelby Tube Sample

HOWLAND ENGINEERING AND SURVEYING CO.

LOG OF BORING NUMBER P-8

PROJECT:	Espejo Gates - County Line Road	REPORT NO.:	35450
CLIENT:	S & B Infrastructure, Ltd.	DATE:	December 13, 2014
PROJECT LOCATION:	Espejo Gates - County Line Road		
BORING LOCATION:	As Per Plan		
DRILLER:	Hugo Rendon	ELEVATION:	NA
DRILLING METHOD:	Straight Flight Auger	WEATHER:	Sunny and Cool
		LOGGED BY:	J. Reyes
DEPTH TO WATER INITIAL:	NE	AFTER 24 HOURS:	NR

Depth (Feet)	Samples	N / (QP)	Soil Symbol	Description of Stratum No Flexible Base	Minus 200 (%)	Moisture Content (%)	Atterberg Limits (%) Liquid Limit L.L.	Plastic Limit P. L.	Plastic. Index P. I.	qu (TSF)	UNIT DRY WT (PCF)
1		9									
	P1	10		Very Stiff, Light Brown to							
2		12		Olive Brown Lean Clay with	75	11	42	19	23		
3				Sand and Calcareous Particles							
4		12									
	P2	10									
5		12		(CL)	77	17	48	22	26		
6				BORING TERMINATED							
7											
8											
9											
10											
11											
12											
13											
14											
15											
16											
17											
18											
19											
20											

P = Standard Penetration Resistance (BL/FT) NE = Not Encountered NA = Not Applicable
Qp = Pocket Penetrometer Test (TSF) NR = Not Required ND = Not Determined
qu = Unconfined Compressive Strength Test
ST = Shelby Tube Sample

HOWLAND ENGINEERING AND SURVEYING CO.

LOG OF BORING NUMBER P-9

PROJECT:	Espejo Gates - County Line Road	REPORT NO.:	35450
CLIENT:	S & B Infrastructure, Ltd.	DATE:	December 13, 2014
PROJECT LOCATION:	Espejo Gates - County Line Road		
BORING LOCATION:	As Per Plan		
DRILLER:	Hugo Rendon	ELEVATION:	NA
DRILLING METHOD:	Straight Flight Auger	WEATHER:	Sunny and Cool
		LOGGED BY:	J. Reyes
DEPTH TO WATER INITIAL:	NE	AFTER 24 HOURS:	NR

Depth (Feet)	Samples	N / (QP)	Soil Symbol	Description of Stratum	Minus 200 (%)	Moisture Content (%)	Atterberg Limits (%) Liquid Limit L.L.	Plastic Limit P. L.	Plastic. Index P. I.	qu (TSF)	UNIT DRY WT (PCF)
				2" Flexible Base							
1	P1	7		Stiff to Very Stiff, Light Brown Lean Clay with Sand, Calcareous Deposits and Ferrous Stains							
2		11			75	14	41	21	20		
		15									
3											
4	P2	4									
5		6									
		8		(CL)	73	15	38	19	19		
6				BORING TERMINATED							
7											
8											
9											
10											
11											
12											
13											
14											
15											
16											
17											
18											
19											
20											

P = Standard Penetration Resistance (BL/FT) NE = Not Encountered NA = Not Applicable
Qp = Pocket Penetrometer Test (TSF) NR = Not Required ND = Not Determined
qu = Unconfined Compressive Strength Test
ST = Shelby Tube Sample

HOWLAND ENGINEERING AND SURVEYING CO.

LOG OF BORING NUMBER P-10

PROJECT:	Espejo Gates - County Line Road	REPORT NO.:	35450
CLIENT:	S & B Infrastructure, Ltd.	DATE:	December 13, 2014
PROJECT LOCATION:	Espejo Gates - County Line Road		
BORING LOCATION:	As Per Plan		
DRILLER:	Hugo Rendon	ELEVATION:	NA
DRILLING METHOD:	Straight Flight Auger	WEATHER:	Sunny and Cool
		LOGGED BY:	J. Reyes
DEPTH TO WATER INITIAL:	NE	AFTER 24 HOURS:	NR

Depth (Feet)	Samples	N / (QP)	Soil Symbol	Description of Stratum	Minus 200 (%)	Moisture Content (%)	Atterberg Limits (%) Liquid Limit L.L.	Plastic Limit P. L.	Plastic. Index P. I.	qu (TSF)	UNIT DRY WT (PCF)
				1½" Flexible Base							
1		7									
	P1	9		Stiff to Very Stiff, Light Brown							
2		12		Lean Clay with Sand, Calcareous	71	12	35	17	18		
3				Deposits and Quarcitic Inclusions							
4		4									
	P2	5									
5		6		(CL)	71	13	34	16	18		
				BORING TERMINATED							
6											
7											
8											
9											
10											
11											
12											
13											
14											
15											
16											
17											
18											
19											
20											

P = Standard Penetration Resistance (BL/FT) NE = Not Encountered NA = Not Applicable
Qp = Pocket Penetrometer Test (TSF) NR = Not Required ND = Not Determined
qu = Unconfined Compressive Strength Test
ST = Shelby Tube Sample

HOWLAND ENGINEERING AND SURVEYING CO.

LOG OF BORING NUMBER P-11

PROJECT:	Espejo Gates - County Line Road	REPORT NO.:	35450
CLIENT:	S & B Infrastructure, Ltd.	DATE:	December 13, 2014
PROJECT LOCATION:	Espejo Gates - County Line Road		
BORING LOCATION:	As Per Plan		
DRILLER:	Hugo Rendon	ELEVATION:	NA
DRILLING METHOD:	Straight Flight Auger	WEATHER:	Sunny and Cool
		LOGGED BY:	J. Reyes
DEPTH TO WATER INITIAL:	NE	AFTER 24 HOURS:	NR

Depth (Feet)	Samples	N / (QP)	Soil Symbol	Description of Stratum 3½" Flexible Base	Minus 200 (%)	Moisture Content (%)	Atterberg Limits (%) Liquid Limit L.L.	Plastic Limit P. L.	Plastic. Index P. I.	qu (TSF)	UNIT DRY WT (PCF)
1		7									
	P1	10		Stiff to Very Stiff, Light Brown to Yellowish Brown Sandy Lean Clay with Calcareous Deposits	68	11	33	17	16		
2		12									
3											
4		3									
	P2	5									
5		6		(CL)	62	12	32	17	15		
				BORING TERMINATED							
6											
7											
8											
9											
10											
11											
12											
13											
14											
15											
16											
17											
18											
19											
20											

P = Standard Penetration Resistance (BL/FT) NE = Not Encountered NA = Not Applicable
Qp = Pocket Penetrometer Test (TSF) NR = Not Required ND = Not Determined
qu = Unconfined Compressive Strength Test
ST = Shelby Tube Sample

HOWLAND ENGINEERING AND SURVEYING CO.

LOG OF BORING NUMBER P-12

PROJECT:	Espejo Gates - County Line Road	REPORT NO.:	35450
CLIENT:	S & B Infrastructure, Ltd.	DATE:	December 13, 2014
PROJECT LOCATION:	Espejo Gates - County Line Road		
BORING LOCATION:	As Per Plan		
DRILLER:	Hugo Rendon	ELEVATION:	NA
DRILLING METHOD:	Straight Flight Auger	WEATHER:	Sunny and Cool
		LOGGED BY:	J. Reyes
DEPTH TO WATER INITIAL:	NE	AFTER 24 HOURS:	NR

Depth (Feet)	Samples	N / (QP)	Soil Symbol	Description of Stratum 3" Flexible Base	Minus 200 (%)	Moisture Content (%)	Atterberg Limits (%) Liquid Limit L.L.	Plastic Limit P. L.	Plastic. Index P. I.	qu (TSF)	UNIT DRY WT (PCF)
1		4		Stiff, Light Brown							
	P1	4		Lean Clay with Sand							
2		8		(CL)	72	17	45	21	24		
3				Very Dense, Dark Brown Silty, Clayey Sand with Calcareous Particles							
4		17									
	P2	36									
5		32		(SC-SM)	48	14	22	16	6		
6				BORING TERMINATED							
7											
8											
9											
10											
11											
12											
13											
14											
15											
16											
17											
18											
19											
20											

P = Standard Penetration Resistance (BL/FT) NE = Not Encountered NA = Not Applicable
Qp = Pocket Penetrometer Test (TSF) NR = Not Required ND = Not Determined
qu = Unconfined Compressive Strength Test
ST = Shelby Tube Sample

HOWLAND ENGINEERING AND SURVEYING CO.

LOG OF BORING NUMBER P-13

PROJECT:	Espejo Gates - County Line Road	REPORT NO.:	35450
CLIENT:	S & B Infrastructure, Ltd.	DATE:	December 13, 2014
PROJECT LOCATION:	Espejo Gates - County Line Road		
BORING LOCATION:	As Per Plan		
DRILLER:	Hugo Rendon	ELEVATION:	NA
DRILLING METHOD:	Straight Flight Auger	WEATHER:	Sunny and Cool
		LOGGED BY:	J. Reyes
DEPTH TO WATER INITIAL:	NE	AFTER 24 HOURS:	NR

Depth (Feet)	Samples	N / (QP)	Soil Symbol	Description of Stratum 3½" Flexible Base	Minus 200 (%)	Moisture Content (%)	Atterberg Limits (%) Liquid Limit L.L.	Plastic Limit P. L.	Plastic. Index P. I.	qu (TSF)	UNIT DRY WT (PCF)
1		2		Firm to Hard, Light Brown Lean Clay with Sand and Calcareous Deposits							
	P1	3									
2		5			83	22	49	22	27		
3											
4		6									
	P2	12									
5		19		(CL)	84	18	43	21	22		
				BORING TERMINATED							
6											
7											
8											
9											
10											
11											
12											
13											
14											
15											
16											
17											
18											
19											
20											

P = Standard Penetration Resistance (BL/FT) NE = Not Encountered NA = Not Applicable
Qp = Pocket Penetrometer Test (TSF) NR = Not Required ND = Not Determined
qu = Unconfined Compressive Strength Test
ST = Shelby Tube Sample

HOWLAND ENGINEERING AND SURVEYING CO.

LOG OF BORING NUMBER P-14

PROJECT:	Espejo Gates - County Line Road	REPORT NO.:	35450
CLIENT:	S & B Infrastructure, Ltd.	DATE:	December 13, 2014
PROJECT LOCATION:	Espejo Gates - County Line Road		
BORING LOCATION:	As Per Plan		
DRILLER:	Hugo Rendon	ELEVATION:	NA
DRILLING METHOD:	Straight Flight Auger	WEATHER:	Sunny and Cool
		LOGGED BY:	J. Reyes
DEPTH TO WATER INITIAL:	NE	AFTER 24 HOURS:	NR

Depth (Feet)	Samples	N / (QP)	Soil Symbol	Description of Stratum No Flexible Base	Minus 200 (%)	Moisture Content (%)	Atterberg Limits (%) Liquid Limit L.L.	Plastic Limit P. L.	Plastic. Index P. I.	qu (TSF)	UNIT DRY WT (PCF)
1	P1	3 4 6		Stiff, Light Brown Sandy Lean Clay with Traces of Gravel (CL)	52	13	33	16	17		
2											
3	P2	3 5 6		Stiff, Olive Brown Fat Clay with Calcareous Deposits (CH)	92	24	55	24	31		
4											
5											
6				BORING TERMINATED							
7											
8											
9											
10											
11											
12											
13											
14											
15											
16											
17											
18											
19											
20											

P = Standard Penetration Resistance (BL/FT) NE = Not Encountered NA = Not Applicable
Qp = Pocket Penetrometer Test (TSF) NR = Not Required ND = Not Determined
qu = Unconfined Compressive Strength Test
ST = Shelby Tube Sample

HOWLAND ENGINEERING AND SURVEYING CO.

LOG OF BORING NUMBER P-15

PROJECT:	Espejo Gates - County Line Road	REPORT NO.:	35450
CLIENT:	S & B Infrastructure, Ltd.	DATE:	December 13, 2014
PROJECT LOCATION:	Espejo Gates - County Line Road		
BORING LOCATION:	As Per Plan		
DRILLER:	Hugo Rendon	ELEVATION:	NA
DRILLING METHOD:	Straight Flight Auger	WEATHER:	Sunny and Cool
		LOGGED BY:	J. Reyes
DEPTH TO WATER INITIAL:	NE	AFTER 24 HOURS:	NR

Depth (Feet)	Samples	N / (QP)	Soil Symbol	Description of Stratum 1½" Flexible Base	Minus 200 (%)	Moisture Content (%)	Atterberg Limits (%) Liquid Limit L.L.	Plastic Limit P. L.	Plastic. Index P. I.	qu (TSF)	UNIT DRY WT (PCF)
1	P1	8		Very Stiff to Hard, Yellowish Brown and Greyish Lean Clay with Sand and Calcareous Deposits	83	15	47	22	25		
2		13									
		16									
3											
4	P2	8									
		13									
5		22		(CL)	81	14	48	22	26		
6				BORING TERMINATED							
7											
8											
9											
10											
11											
12											
13											
14											
15											
16											
17											
18											
19											
20											

P = Standard Penetration Resistance (BL/FT) NE = Not Encountered NA = Not Applicable
Qp = Pocket Penetrometer Test (TSF) NR = Not Required ND = Not Determined
qu = Unconfined Compressive Strength Test
ST = Shelby Tube Sample

HOWLAND ENGINEERING AND SURVEYING CO.

LOG OF BORING NUMBER P-16

PROJECT:	Espejo Gates - County Line Road	REPORT NO.:	35450
CLIENT:	S & B Infrastructure, Ltd.	DATE:	December 13, 2014
PROJECT LOCATION:	Espejo Gates - County Line Road		
BORING LOCATION:	As Per Plan		
DRILLER:	Hugo Rendon	ELEVATION:	NA
DRILLING METHOD:	Straight Flight Auger	WEATHER:	Sunny and Cool
		LOGGED BY:	J. Reyes
DEPTH TO WATER INITIAL:	NE	AFTER 24 HOURS:	NR

Depth (Feet)	Samples	N / (QP)	Soil Symbol	Description of Stratum No Flexible Base	Minus 200 (%)	Moisture Content (%)	Atterberg Limits (%) Liquid Limit L.L.	Plastic Limit P. L.	Plastic. Index P. I.	qu (TSF)	UNIT DRY WT (PCF)
1		4									
	P1	8		Very Stiff, Light Brown Fat							
2		8		Clay with Calcareous Deposits	85	15	59	24	35		
3											
4		5									
	P2	10									
5		14		(CH)	96	16	54	22	32		
				BORING TERMINATED							
6											
7											
8											
9											
10											
11											
12											
13											
14											
15											
16											
17											
18											
19											
20											

P = Standard Penetration Resistance (BL/FT) NE = Not Encountered NA = Not Applicable
Qp = Pocket Penetrometer Test (TSF) NR = Not Required ND = Not Determined
qu = Unconfined Compressive Strength Test
ST = Shelby Tube Sample

HOWLAND ENGINEERING AND SURVEYING CO.

LOG OF BORING NUMBER P-17

PROJECT:	Espejo Gates - County Line Road	REPORT NO.:	35450
CLIENT:	S & B Infrastructure, Ltd.	DATE:	December 13, 2014
PROJECT LOCATION:	Espejo Gates - County Line Road		
BORING LOCATION:	As Per Plan		
DRILLER:	Hugo Rendon	ELEVATION:	NA
DRILLING METHOD:	Straight Flight Auger	WEATHER:	Sunny and Cool
		LOGGED BY:	J. Reyes
DEPTH TO WATER INITIAL:	NE	AFTER 24 HOURS:	NR

Depth (Feet)	Samples	N / (QP)	Soil Symbol	Description of Stratum No Flexible Base	Minus 200 (%)	Moisture Content (%)	Atterberg Limits (%) Liquid Limit L.L.	Plastic Limit P. L.	Plastic. Index P. I.	qu (TSF)	UNIT DRY WT (PCF)
1		4									
	P1	5		Stiff, Light Brown to Brown							
2		7		Lean Clay with Sand	73	15	37	18	19		
3				and Calcareous Particles							
4		6									
	P2	8									
5		7		(CL)	80	14	41	21	20		
6				BORING TERMINATED							
7											
8											
9											
10											
11											
12											
13											
14											
15											
16											
17											
18											
19											
20											

P = Standard Penetration Resistance (BL/FT) NE = Not Encountered NA = Not Applicable
Qp = Pocket Penetrometer Test (TSF) NR = Not Required ND = Not Determined
qu = Unconfined Compressive Strength Test
ST = Shelby Tube Sample

HOWLAND ENGINEERING AND SURVEYING CO.

LOG OF BORING NUMBER P-18

PROJECT:	Espejo Gates - County Line Road	REPORT NO.:	35450
CLIENT:	S & B Infrastructure, Ltd.	DATE:	December 13, 2014
PROJECT LOCATION:	Espejo Gates - County Line Road		
BORING LOCATION:	As Per Plan		
DRILLER:	Hugo Rendon	ELEVATION:	NA
DRILLING METHOD:	Straight Flight Auger	WEATHER:	Sunny and Cool
		LOGGED BY:	J. Reyes
DEPTH TO WATER INITIAL:	NE	AFTER 24 HOURS:	NR

Depth (Feet)	Samples	N / (QP)	Soil Symbol	Description of Stratum 12" Flexible Base	Minus 200 (%)	Moisture Content (%)	Atterberg Limits (%) Liquid Limit L.L.	Plastic Limit P. L.	Plastic. Index P. I.	qu (TSF)	UNIT DRY WT (PCF)
1	P1	2 4 4		Firm, Dark Greyish Lean Clay with Sand (CL)	81	21	45	22	23		
2											
3	P2	2 4 4		Firm, Light Brown Fat Clay with Calcareous Deposits (CH)	89	23	59	24	35		
4											
5											
6				BORING TERMINATED							
7											
8											
9											
10											
11											
12											
13											
14											
15											
16											
17											
18											
19											
20											

P = Standard Penetration Resistance (BL/FT) NE = Not Encountered NA = Not Applicable
Qp = Pocket Penetrometer Test (TSF) NR = Not Required ND = Not Determined
qu = Unconfined Compressive Strength Test
ST = Shelby Tube Sample

HOWLAND ENGINEERING AND SURVEYING CO.

LOG OF BORING NUMBER P-19

PROJECT:	Espejo Gates - County Line Road	REPORT NO.:	35450
CLIENT:	S & B Infrastructure, Ltd.	DATE:	December 13, 2014
PROJECT LOCATION:	Espejo Gates - County Line Road		
BORING LOCATION:	As Per Plan		
DRILLER:	Hugo Rendon	ELEVATION:	NA
DRILLING METHOD:	Straight Flight Auger	WEATHER:	Sunny and Cool
		LOGGED BY:	J. Reyes
DEPTH TO WATER INITIAL:	NE	AFTER 24 HOURS:	NR

Depth (Feet)	Samples	N / (QP)	Soil Symbol	Description of Stratum 1" Flexible Base	Minus 200 (%)	Moisture Content (%)	Atterberg Limits (%) Liquid Limit L.L.	Plastic Limit P. L.	Plastic. Index P. I.	qu (TSF)	UNIT DRY WT (PCF)
1	P1	4 3 3		Firm, Light Brown Lean Clay with Sand (CL)	79	21	40	20	20		
2											
3	P2	3 5 6		Stiff, Light Brown Fat Clay with Calcareous Deposits (CH)	92	21	56	24	32		
4											
5											
6				BORING TERMINATED							
7											
8											
9											
10											
11											
12											
13											
14											
15											
16											
17											
18											
19											
20											

P = Standard Penetration Resistance (BL/FT) NE = Not Encountered NA = Not Applicable
Qp = Pocket Penetrometer Test (TSF) NR = Not Required ND = Not Determined
qu = Unconfined Compressive Strength Test
ST = Shelby Tube Sample

HOWLAND ENGINEERING AND SURVEYING CO.

LOG OF BORING NUMBER P-20

PROJECT:	Espejo Gates - County Line Road	REPORT NO.:	35450
CLIENT:	S & B Infrastructure, Ltd.	DATE:	December 13, 2014
PROJECT LOCATION:	Espejo Gates - County Line Road		
BORING LOCATION:	As Per Plan		
DRILLER:	Hugo Rendon	ELEVATION:	NA
DRILLING METHOD:	Straight Flight Auger	WEATHER:	Sunny and Cool
		LOGGED BY:	J. Reyes
DEPTH TO WATER INITIAL:	NE	AFTER 24 HOURS:	NR

Depth (Feet)	Samples	N / (QP)	Soil Symbol	Description of Stratum	Minus 200 (%)	Moisture Content (%)	Atterberg Limits (%) Liquid Limit L.L.	Plastic Limit P. L.	Plastic. Index P. I.	qu (TSF)	UNIT DRY WT (PCF)
				10" Flexible Base							
1	P1	7		Loose, Light Brown Clayey Sand with Gravel							
2		5 4		(SC)	47	8	32	17	15		
3				Stiff, Light Brown Lean Clay with Sand and Calcareous Deposits							
4	P2	3									
5		5 6		(CL)	82	19	44	22	22		
6				BORING TERMINATED							
7											
8											
9											
10											
11											
12											
13											
14											
15											
16											
17											
18											
19											
20											

P = Standard Penetration Resistance (BL/FT) NE = Not Encountered NA = Not Applicable
Qp = Pocket Penetrometer Test (TSF) NR = Not Required ND = Not Determined
qu = Unconfined Compressive Strength Test
ST = Shelby Tube Sample

HOWLAND ENGINEERING AND SURVEYING CO.

LOG OF BORING NUMBER P-21

PROJECT:	Espejo Gates - County Line Road	REPORT NO.:	35450
CLIENT:	S & B Infrastructure, Ltd.	DATE:	December 13, 2014
PROJECT LOCATION:	Espejo Gates - County Line Road		
BORING LOCATION:	As Per Plan		
DRILLER:	Hugo Rendon	ELEVATION:	NA
DRILLING METHOD:	Straight Flight Auger	WEATHER:	Sunny and Cool
		LOGGED BY:	J. Reyes
DEPTH TO WATER INITIAL:	NE	AFTER 24 HOURS:	NR

Depth (Feet)	Samples	N / (QP)	Soil Symbol	Description of Stratum	Minus 200 (%)	Moisture Content (%)	Atterberg Limits (%) Liquid Limit L.L.	Plastic Limit P. L.	Plastic. Index P. I.	qu (TSF)	UNIT DRY WT (PCF)
				1" Flexible Base							
1		4									
	P1	5		Stiff, Brown to Light							
2		6		Brown Lean Clay with Sand and Calcareous Deposits	76	15	45	22	23		
3											
4		2									
	P2	4									
5		5		(CL)	79	18	42	20	22		
				BORING TERMINATED							
6											
7											
8											
9											
10											
11											
12											
13											
14											
15											
16											
17											
18											
19											
20											

P = Standard Penetration Resistance (BL/FT) NE = Not Encountered NA = Not Applicable
Qp = Pocket Penetrometer Test (TSF) NR = Not Required ND = Not Determined
qu = Unconfined Compressive Strength Test
ST = Shelby Tube Sample

HOWLAND ENGINEERING AND SURVEYING, INC.

ESPEJO GATES – COUNTY LINE ROAD
FROM US HIGHWAY 83 TO DIMMIT / WEBB COUNTY LINE

HOWLAND
ENGINEERING AND SURVEYING CO.
7615 N. Bartlett Avenue
Laredo, Texas 78041-6508
P. 956.722.4411
F. 956.722.5414
TBPE Firm Registration No. F-4097
TBPLS Firm Registration No. 100464-00
www.howlandcompanies.com

APPROXIMATE TEST BORING LOCATION PLAN

PROJECT: Espejo Gates – County Line Road

LOCATION: Encinal, Webb County, Texas

REPORT NUMBER: 35450

View west toward bore P-10.

View northwest toward bore P-11.

HOWLAND
ENGINEERING AND SURVEYING CO.

SYMBOLS AND TERMS USED ON BORING LOGS

UNIFIED SOIL CLASSIFICATION SYSTEM			
GRAVELS More than half of coarse fraction larger than No. 4 sieve size		GW	Well graded gravels or sand and gravel mixture, little or no fines.
		GP	Poorly graded gravels or sand and gravel mixture, little or no fines.
		GM	Silty gravels, poorly graded gravel-sand-silt mixture
		GC	Clayey gravels, poorly graded gravel-sand-clay mixtures.
SANDS More than half of coarse fraction smaller than No. 4 sieve size		SW	Well graded sand or gravelly sands, little or no fines.
		SP	Poorly graded sand or gravelly sands, little or no fines.
		SM	Silty sands, poorly graded sand-silt mixtures
		SC	Clayey sands, poorly graded sand-clay mixtures.
SILTS AND CLAYS More than half of coarse fraction smaller than No. 4 sieve size		ML	Inorganic silts and very fine sands of low to medium plasticity.
		CL	Inorganic clays of low to medium plasticity.
		OL	Organic silts and organic silty clays of low plasticity.
SILTS AND CLAYS Liquid Limit more than 50%		MH	Inorganic silts and very fine sands of low to medium plasticity.
		CH	Inorganic clays of low to medium plasticity.
		OH	Organic silts and organic silty clays of low plasticity.
HIGHLY ORGANIC SOILS		Pt	Peats and other higly organic soils.

TYPE OF TEST OR SAMPLE	
A - Auger Sample. P - Split Barrel Sample with Standard Penetration Test.	C - Rotary Coring Sample. S - Thin wall Tube (Shelby Tube) Sample. T - THD Cone Penetrometer Test.

CONSISTENCY OF SOILS			
Sand		Clay	
Descriptive Term	"N" Value (BL/LF)	Descriptive Term	"N" Value (BL/LF)
Very Loose	0 - 4	Very Soft	Less than 2
Loose	4 - 10	Soft	2 - 4
Medium Dense	10 - 30	Firm	4 - 8
Dense	30 - 50	Stiff	8 - 15
Very Dense	Greater than 50	Very stiff	15 - 30
		Hard	Greater than 30

Form Last Revised: October 29, 2014

FIELD AND LABORATORY TESTING PROCEDURES

(TEST PROCEDURES ARE PRESENTED FOR INFORMATIONAL PURPOSES)

FIELD TESTING

A. Boring Procedure between Samples

The borehole is extended downward, between samples, by continuous flight, hollow or solid stem augers or by rotary drilling techniques using bentonite drilling fluid or water.

B. Penetration Test and Split-Barrel Sampling of Soils (ASTM D-1586)

This sampling method consists of driving a 2 inch outside diameter split barrel sampler using a 140 pound hammer freely falling through a distance of 30 inches. The sampler is first seated 6 inches into the material to be sampled and then driven an additional 12 inches. The number of blows required to drive the sampler the final 12 inches is known as the Standard Penetration Resistance. Recovered samples are first classified as to color and texture by the driller. Later, in the laboratory, the driller's field classification is reviewed by the soils engineer who examines each sample.

C. Thin-walled Tube Geotechnical Sampling of Soils (ASTM D-1587)

This method consists of pushing thin walled steel tubes, usually 3 inches in diameter, into the soils to be sampled using hydraulic or other means. Cohesive soils are usually sampled in this manner and relatively undisturbed samples are recovered.

D. Soil Investigation and Sampling by Auger Borings (ASTM D-1452)

This method consists if augering a hole and removing representative soil samples from the auger flight or bit at 5 foot intervals or with each change in the substrata. Disturbed samples are obtained and this method is, therefore, limited to situations where it is satisfactory to determine the approximate subsurface profile.

E. Diamond Core Drilling for Site Investigation (ASTM D-2113)

This method consists of advancing a hole into hard strata by rotating a single or double tube core barrel equipped with a cutting bit. Diamond, tungsten carbide, or other cutting agents may be used for the bit. Wash water is used to remove the cuttings and to cool the bit. Normally, a 2 inch outside diameter by 1-3/8 inch inside diameter (NX) coring bit is used unless otherwise noted. The rock or hard material recovered within core barrel is examined in the field and in the laboratory and the core samples are stored in partitioned boxes. The core recovery is the length of material recovered and is expressed as a percentage of the total distance penetrated.

LABORATORY TESTING

A. Atterberg Limits: Liquid Limit, Plastic Limit and Plasticity Index of Soils (ASTM D-4318, TEX 104-E, 105-E and 106-E)

Atterberg Limits determine the soil's plasticity characteristics. The soil's Plasticity Index (PI) is representative of this characteristic and is the difference between the Liquid Limit (LL) and the Plastic Limit (PL). The LL is the moisture content at which the soil will flow as a heavy viscous fluid. The PL is the moisture content at which the soil begins to lose its plasticity. The test results are presented on the boring logs adjacent to the appropriate sampling information.

B. Particle Size Analysis of Soils (ASTM D-422 and TEX 110-E)

Grain size analysis tests are performed to determine the particle size and distribution of the samples tested. The grain size distribution of the soils coarser than the Standard Number 200 sieve was determined by passing the sample through a standard set of nested sieves. The results are given on the gradation sheets in the appendix.

C. Laboratory Determination of Water (Moisture) Content of Soil and Rock (ASTM D-2216 and TEX 103-E)

The moisture content of soil is defined as the ratio, expressed as a percentage, of the weight of water in a given soil mass to the weight of solid particles. It is determined by measuring the wet and oven dry weights of a soil sample. The test results are presented on the boring logs.

D. Unconfined Compressive Strength of Cohesive Soil (ASTM D-2166)

The unconfined compressive strength of soil is determined by placing a section of an undisturbed sample into a loading frame and applying an axial load until the sample fails in shear. The test results are presented on the boring logs adjacent to the appropriate sampling information.

E. California Bearing Ratio (CBR) of Lab Compacted Soils (ASTM D-1883)

The CBR test is performed by compacting soil in a six inch diameter mold at the desired density, soaking the sample for four days under a surcharge load approximating the pavement weight and then testing the soil in punching shear. A two inch diameter piston is forced into the soil to determine the resistance to penetration. The CBR is the ratio of the actual load required to produce 0.1 inches of penetration to that producing the same penetration in a standard crushed stone.

F. Swell Test (ASTM D-4546)

The Swell Test is performed by compacting soil in a steel mold at varying moisture contents. Layers are compacted using a hammer weight and number of blows per layer which vary with the different test procedures. ASTM D-698, D-1557, TEX-113-E and 114 E. The data is plotted and the maximum unit weight and optimum moisture content determined. The test results are given in the appendix with a notation of the test method used.

G. Compaction Tests (ASTM D-698, D-1557, TEX 113E or 114-E)

The compaction test is performed by compacting soil in a steel mold at varying moisture contents. Layers are compacted using a hammer weight and number of blows per layer which vary with the different test procedures, ASTM D-698, D-1557, TEX-113-E and 114-E. The data is plotted and the maximum unit weight and optimum moisture content determined. The test results are given in the appendix with a notation of the test method used.

RECOMMENDED SPECIFICATIONS FOR PLACEMENT OF COMPACTED SELECT FILL

1. General

The soils engineer shall be the owners' representative to control the placement of compacted fill. The soils engineer shall approve the subgrade preparation, the fill materials, the method of placement and compaction; and shall give written approval of the completed fill.

2. Preparation of Existing Ground

All topsoil, plants and other organic material shall be removed. The exposed surface shall be scarified, moistened if necessary, and compacted in the manner specified for subsequent layers of fill.

3. Select Fill Material

Fill shall have a liquid limit of 37 or less and a Plasticity Index between 7 and 18. The fill shall contain no organic or other perishable material, and no stones larger than six (6) inches. The soils engineer shall approve select fill material.

4. Placing Fill

Fill materials shall be placed in horizontal layers not exceeding eight (8) inches thickness after compaction. Successive loads of material shall be dumped so as to secure even distribution avoiding the formation of layers or lenses of dissimilar materials. The contractor shall route his hauling equipment to distribute travel evenly over the fill area.

5. Compaction of Fill

a. Moisture Control: The moisture content of the fill material shall be distributed uniformly throughout each layer of the material. The allowable range of moisture content during compaction shall be within plus two (+2) and minus two (-2) percentage points of the optimum moisture content. The contractor may be directed to add necessary moisture to the material either in the borrow area or upon the fill surface or to dry the material, as directed by the soils engineer. The drying of cohesive soils between lifts to moisture contents less than seventy percent (70 %) of optimum before the placement of subsequent lifts shall be avoided or the fill reworked at the proper moisture content.

b. Compaction: The material in each layer shall be compacted to obtain proper densities. Compaction by the hauling equipment alone will not be considered sufficient. Structural fills, including pavement subgrade, sub base and base, shall be compacted to densities equivalent to the percentages of the Standard Proctor (ASTM D-698) or the Modified Proctor (ASTM D-1557) maximum dry density listed in Table I. The Texas Department of Highways and Public Transportation Method TEX-113-E compaction test, which varies the compactive effort with soil type, may be substituted for the Standard or Modified Proctor methods and the percentages listed in table I used.

TABLE I		
AREA	**PERCENT COMPACTION**	
	Fine Grained Soils ASTM D-698 Standard Proctor	Coarse Grained Soils ASTM D-1557 Modified Proctor
Within five (5) feet of building lines, under footings floor slabs, slab-on-grade foundations and structures attached to buildings (i.e. walls, patios, steps)	95	95 +
More than five (5) feet beyond building lines, under walks, and fill areas to be landscaped	90	90
Pavement subgrade and subbase, including lime treated soils	95	95 +
Flexible Base	N/A	98

Soils classified as coarse grained soils are those with more than fifty (50) percent, by weight, retained on the No. 200 Standard Sieve and with plasticity indices of less than 4.

6. Compaction Testing

A qualified testing laboratory in accordance with recognized procedures for making such tests shall perform Field density tests for the determination of the compaction of the fill. A representative number of tests shall be made in each compacted lift at locations selected by the soils engineer or his representative. For general structural and paving fills, we suggest one test per 3,000 square feet per lift with a minimum of three tests per lift.

DCP TEST DATA

Project: Espejo Gates - County Line Road **Date:** December 13, 2014

Location: P-1 (As per Plan) **Soil Type(s):** Type in the soil type

Hammer
- ○ 10.1 lbs.
- ◉ 17.6 lbs.
- ○ Both hammers used

Soil Type
- ○ CH
- ◉ CL
- ○ All other soils

No. of Blows	Accumulative Penetration (mm)	Type of Hammer
0	241.3	
6	289.6	
5	337.8	
4	386.1	
5	436.9	
6	490.2	
6	546.1	
4	599.4	
4	647.7	
3	690.9	
4	749.3	
4	802.6	
3	853.4	
3	894.1	

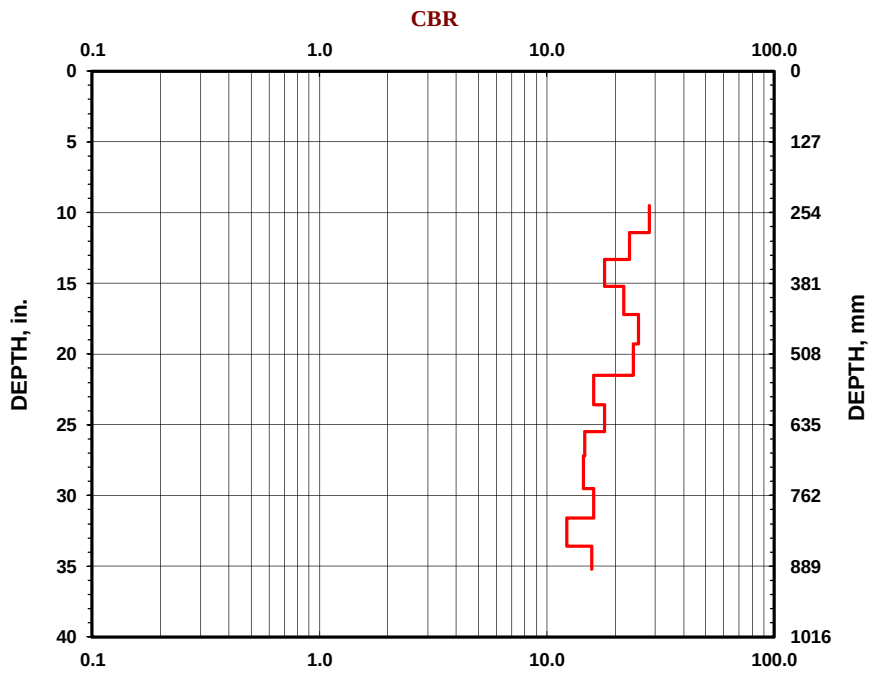

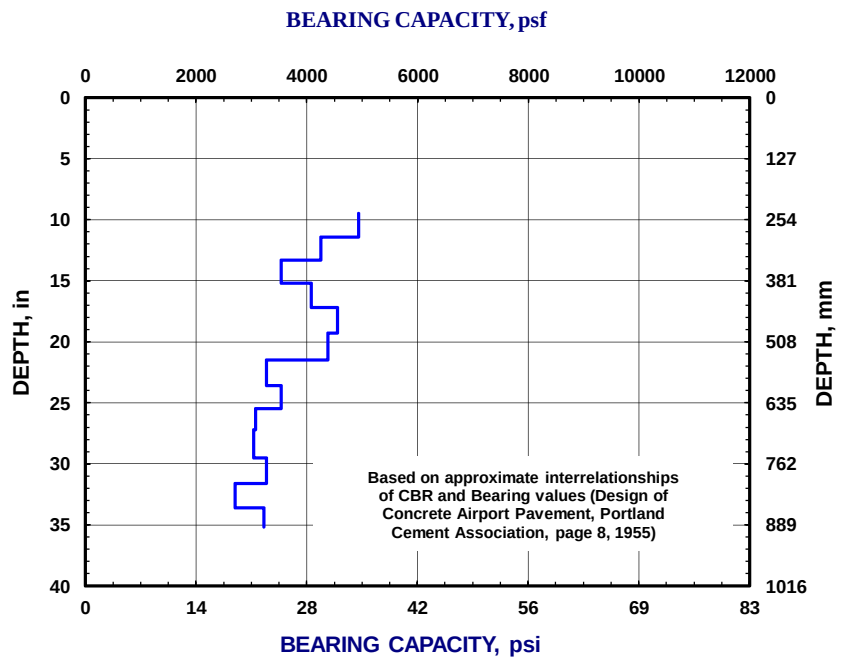

DCP TEST DATA

Project: Espejo Gates - County Line Road **Date:** December 13, 2014

Location: P-2 (As per Plan) **Soil Type(s):** Type in the soil type

Hammer
- ○ 10.1 lbs.
- ◉ 17.6 lbs.
- ○ Both hammers used

Soil Type
- ○ CH
- ◉ CL
- ○ All other soils

No. of Blows	Accumulative Penetration (mm)	Type of Hammer
0	246.4	
3	287	
4	342.9	
3	391.2	
3	442	
3	500.4	
2	541	
3	602	
2	642.6	
3	701	
2	749.3	
2	792.5	
2	840.7	
3	906.8	

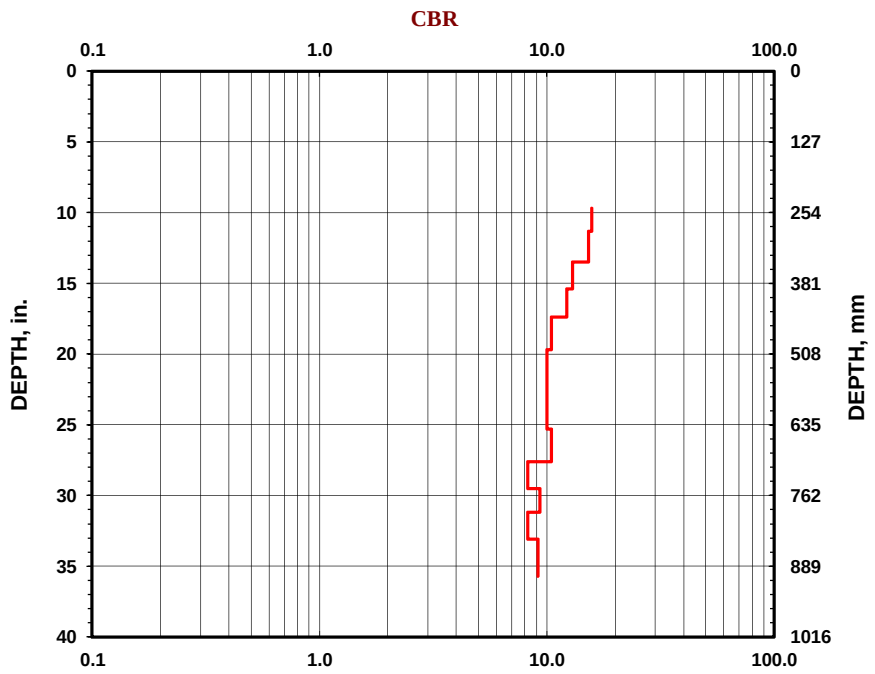

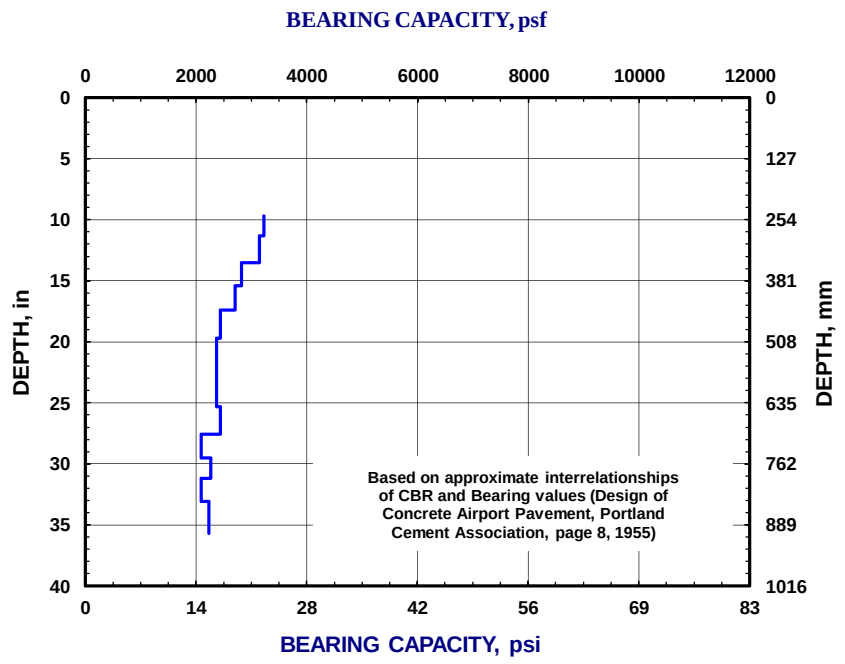

DCP TEST DATA

Project: Espejo Gates - County Line Road **Date:** December 13, 2014

Location: P-3 (As per Plan) **Soil Type(s):** Type in the soil type

Hammer
- ○ 10.1 lbs.
- ◉ 17.6 lbs.
- ○ Both hammers used

Soil Type
- ○ CH
- ◉ CL
- ○ All other soils

No. of Blows	Accumulative Penetration (mm)	Type of Hammer
0	241.3	
3	299.7	
3	345.4	
2	393.7	
2	436.9	
3	500.4	
2	538.5	
4	586.7	
5	647.7	
4	698.5	
4	744.2	
6	797.6	
5	845.8	
6	894.1	

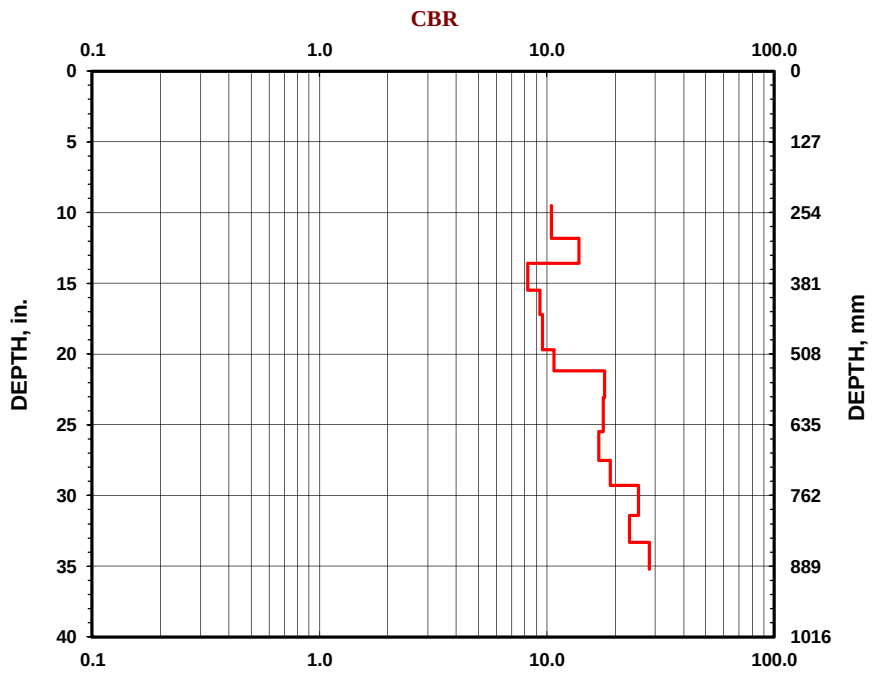

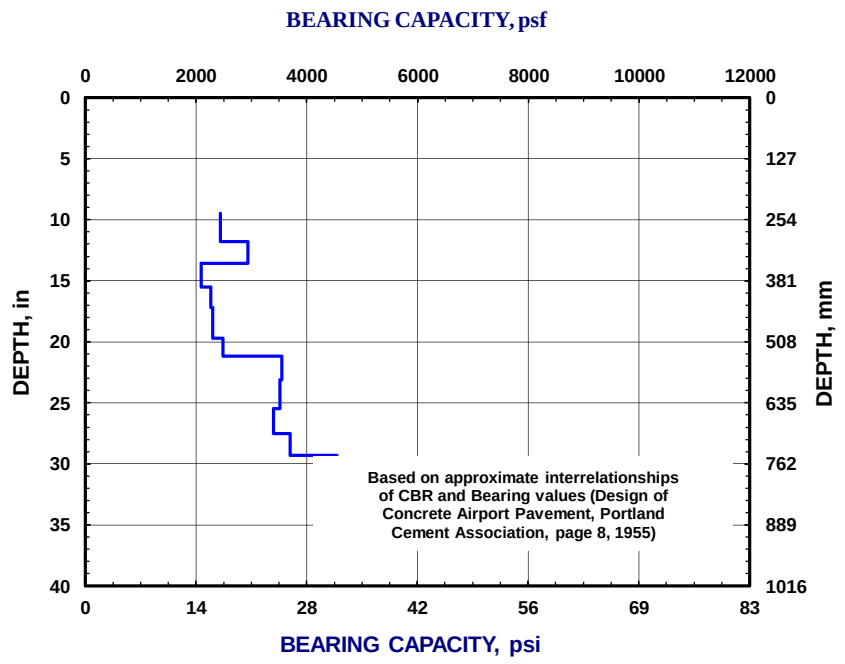

DCP TEST DATA

Project: Espejo Gates - County Line Road **Date:** December 13, 2014

Location: P-4 (As per Plan) **Soil Type(s):** Type in the soil type

Hammer
- ○ 10.1 lbs.
- ◉ 17.6 lbs.
- ○ Both hammers used

Soil Type
- ○ CH
- ◉ CL
- ○ All other soils

No. of Blows	Accumulative Penetration (mm)	Type of Hammer
0	243.8	
4	287	
8	335.6	
8	391.2	
6	447	
3	497.8	
3	543.6	
4	604.5	
3	650.2	
4	698.5	
4	744.2	
5	797.6	
5	848.5	
4	896.6	

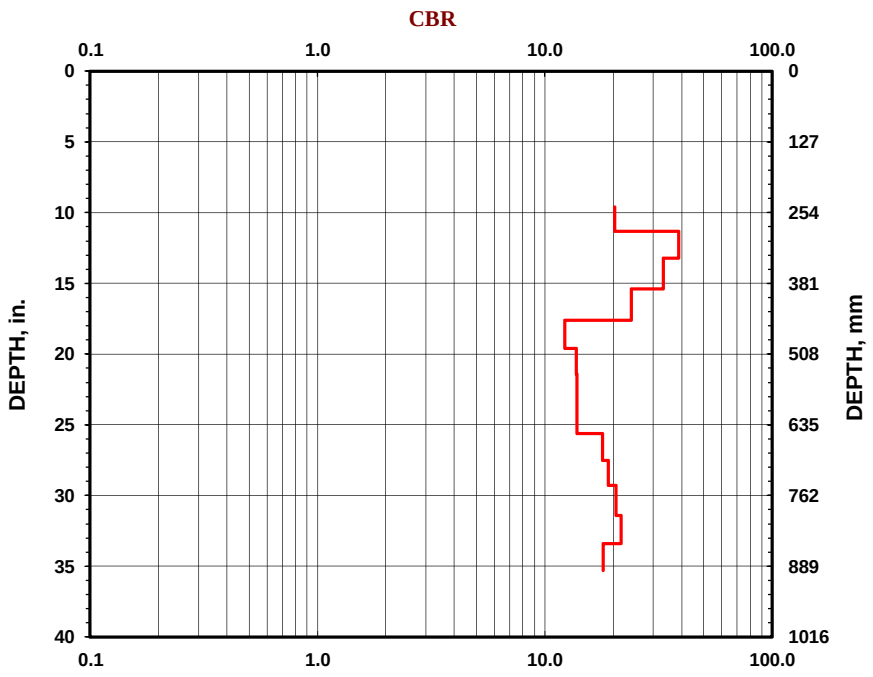

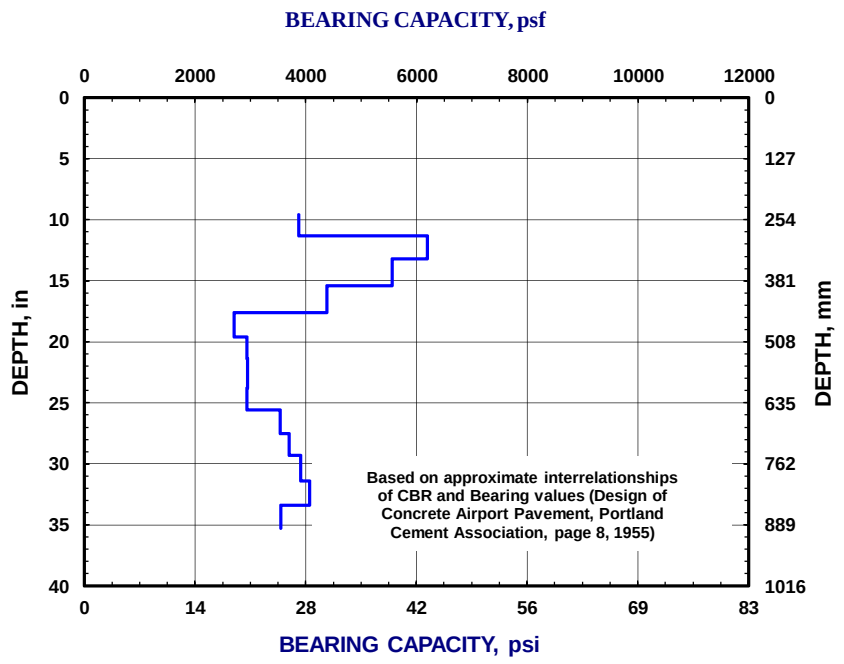

DCP TEST DATA

Project: Espejo Gates - County Line Road **Date:** December 13, 2014

Location: P-5 (As per Plan) **Soil Type(s):** Type in the soil type

Hammer
- ○ 10.1 lbs.
- ◉ 17.6 lbs.
- ○ Both hammers used

Soil Type
- ○ CH
- ◉ CL
- ○ All other soils

No. of Blows	Accumulative Penetration (mm)	Type of Hammer
0	248.9	
1	289.6	
4	337.8	
7	386.1	
7	442	
6	490.2	
9	543.6	
9	594.4	
8	642.6	
8	698.5	
9	746.8	
8	795	
10	850.9	
11	906.8	

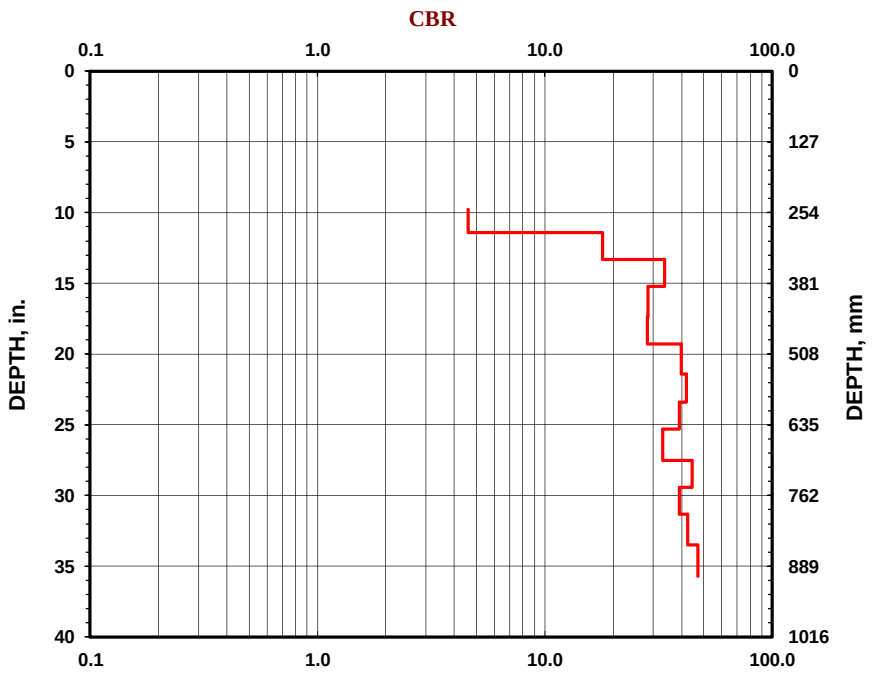

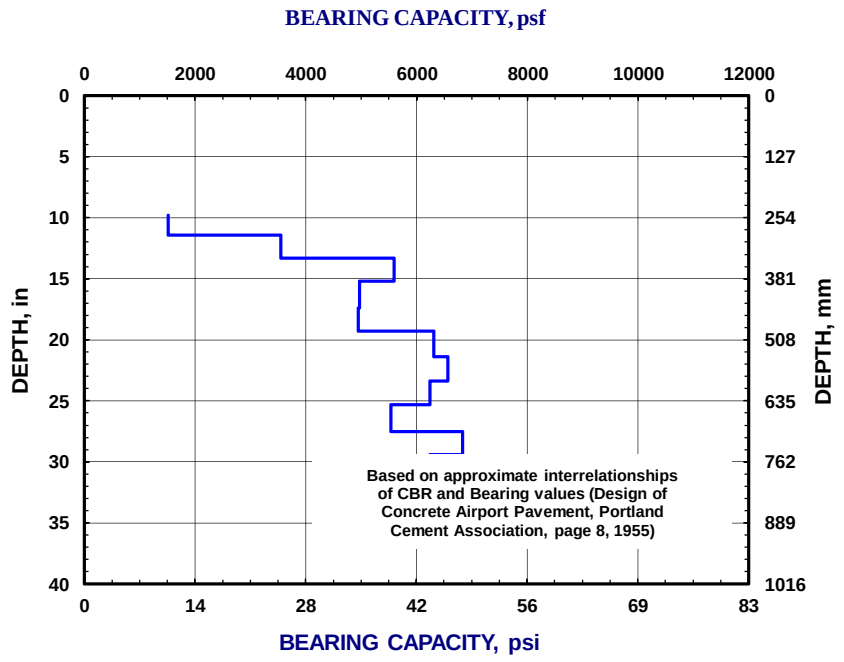

DCP TEST DATA

Project: Espejo Gates - County Line Road **Date:** December 13, 2014

Location: P-6 (As per Plan) **Soil Type(s):** Type in the soil type

Hammer
- ○ 10.1 lbs.
- ◉ 17.6 lbs.
- ○ Both hammers used

Soil Type
- ○ CH
- ◉ CL
- ○ All other soils

No. of Blows	Accumulative Penetration (mm)	Type of Hammer
0	246.4	
3	284.5	
3	337.8	
4	386.1	
5	436.9	
5	490.2	
9	541	
4	589.3	
3	645.2	
3	701	
2	741.7	
3	805.2	
2	861.1	
1	894.1	

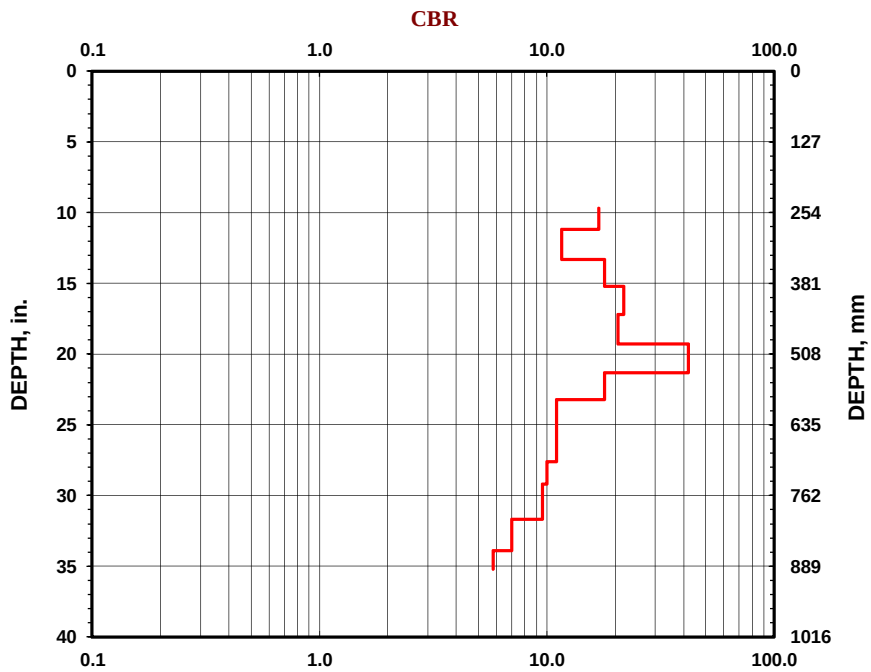

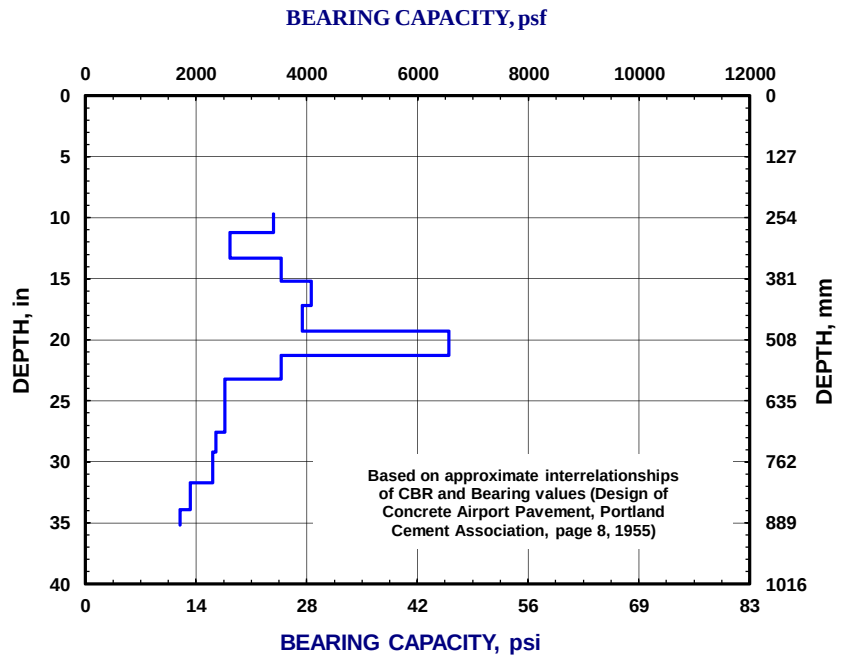

DCP TEST DATA

Project: Espejo Gates - County Line Road **Date:** December 13, 2014

Location: P-7 (As per Plan) **Soil Type(s):** Type in the soil type

Hammer
- ○ 10.1 lbs.
- ◉ 17.6 lbs.
- ○ Both hammers used

Soil Type
- ○ CH
- ◉ CL
- ○ All other soils

No. of Blows	Accumulative Penetration (mm)	Type of Hammer
0	241.3	
1	294.6	
1	345.4	
1	386.1	
5	444.5	
4	490.2	
4	548.6	
3	602	
2	645.2	
3	706.1	
3	754.4	
3	800.1	
3	845.8	
4	899.2	

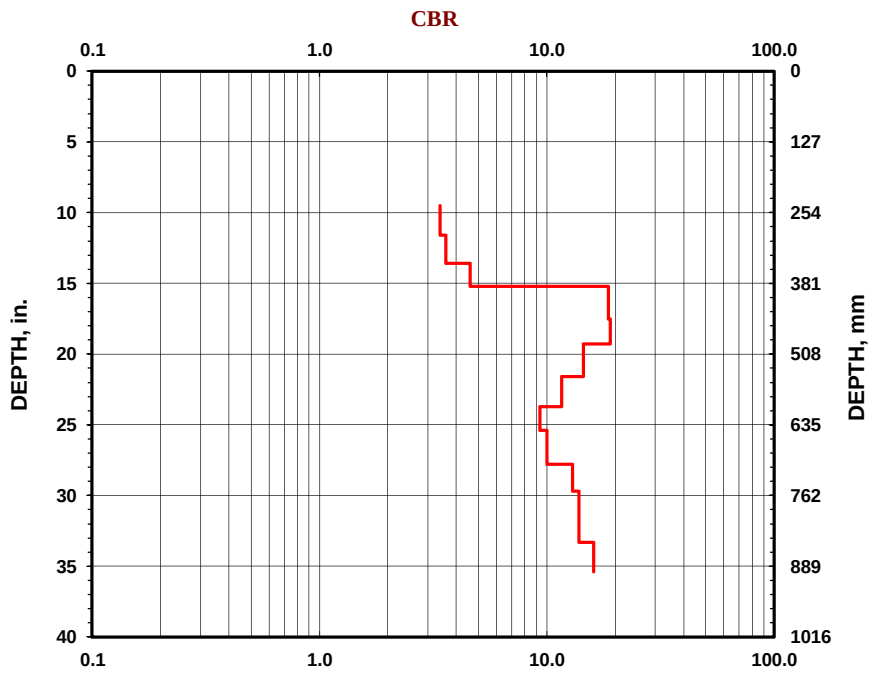

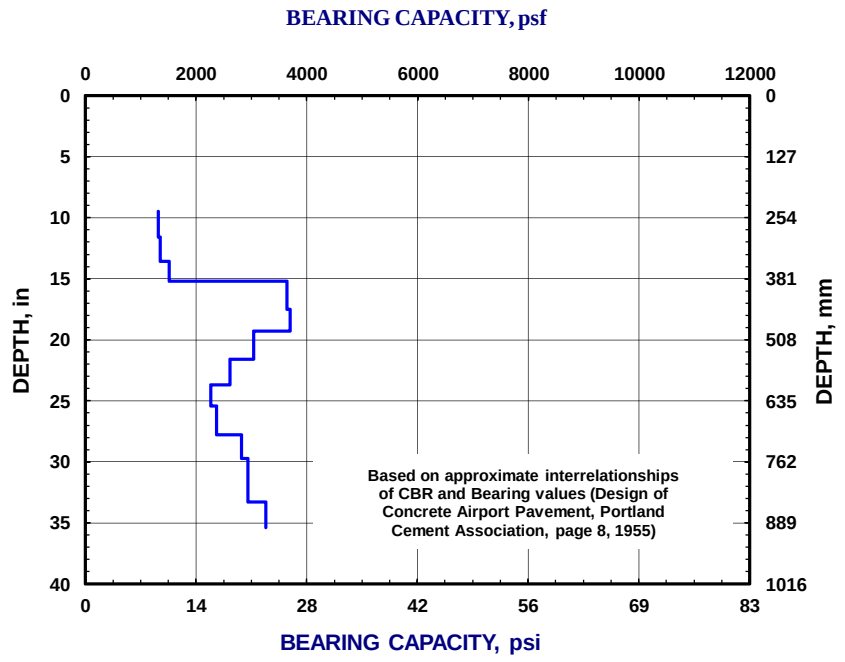

DCP TEST DATA

Project: Espejo Gates - County Line Road **Date:** December 13, 2014

Location: P-8 (As per Plan) **Soil Type(s):** Type in the soil type

Hammer
- ○ 10.1 lbs.
- ◉ 17.6 lbs.
- ○ Both hammers used

Soil Type
- ○ CH
- ◉ CL
- ○ All other soils

No. of Blows	Accumulative Penetration (mm)	Type of Hammer
0	243.8	
1	292.1	
1	348	
1	398.8	
1	452.1	
3	505.5	
3	551.2	
4	599.4	
5	650.2	
5	696	
6	751.8	
6	800.1	
5	848.4	
5	901.7	

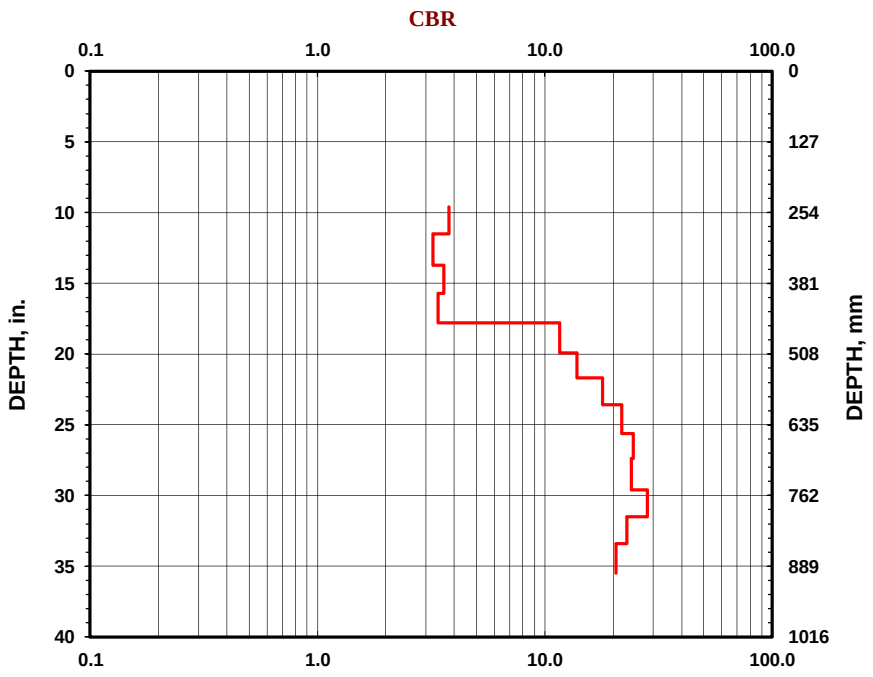

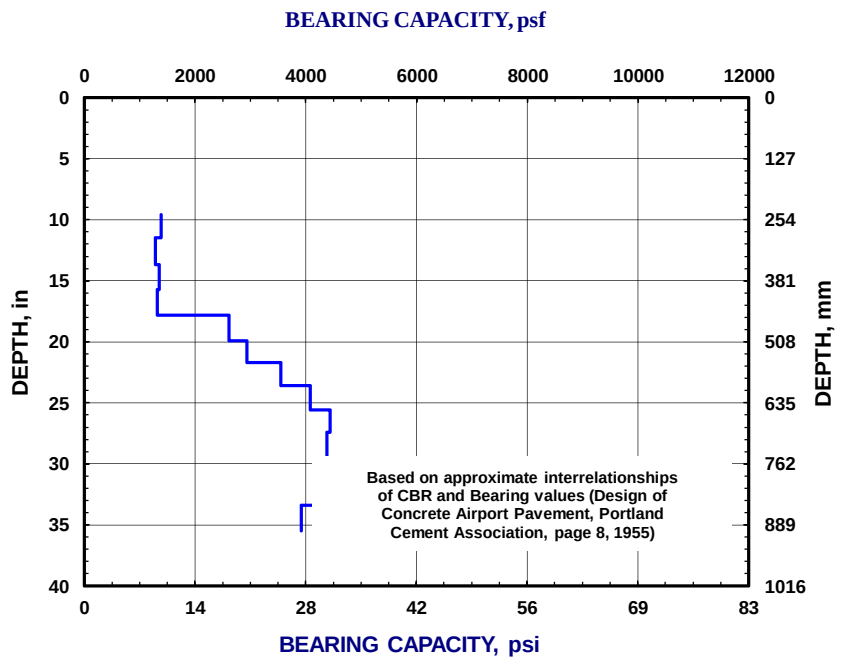

DCP TEST DATA

Project: Espejo Gates - County Line Road **Date:** December 13, 2014

Location: P-9 (As per Plan) **Soil Type(s):** Type in the soil type

Hammer
- ○ 10.1 lbs.
- ◉ 17.6 lbs.
- ○ Both hammers used

Soil Type
- ○ CH
- ◉ CL
- ○ All other soils

No. of Blows	Accumulative Penetration (mm)	Type of Hammer
0	236.2	
3	299.7	
1	353.1	
1	388.6	
2	442	
2	490.2	
3	548.6	
3	604.5	
3	652.8	
3	698.5	
4	749.3	
4	805.2	
4	853.4	
2	899.2	

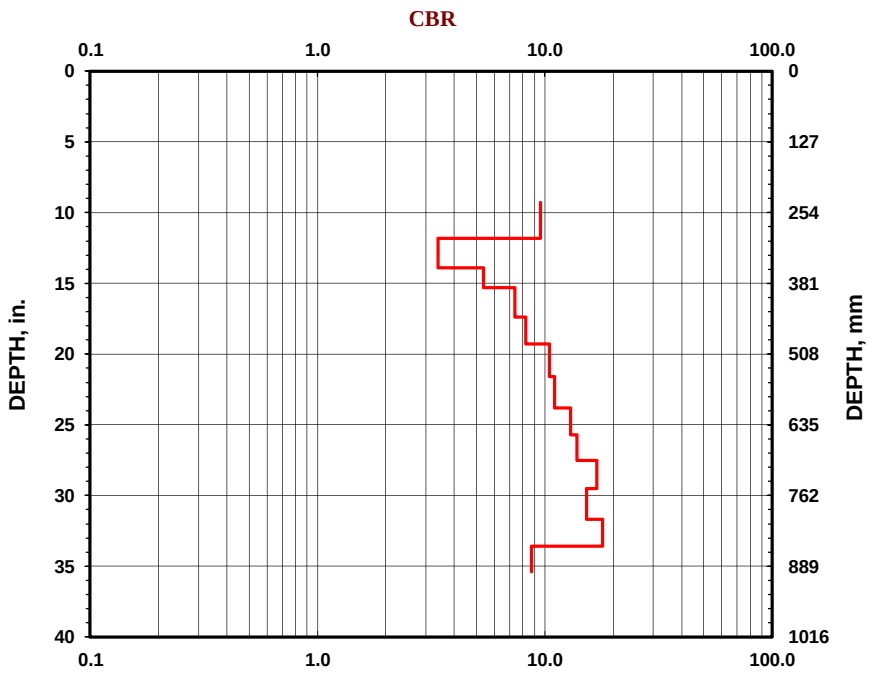

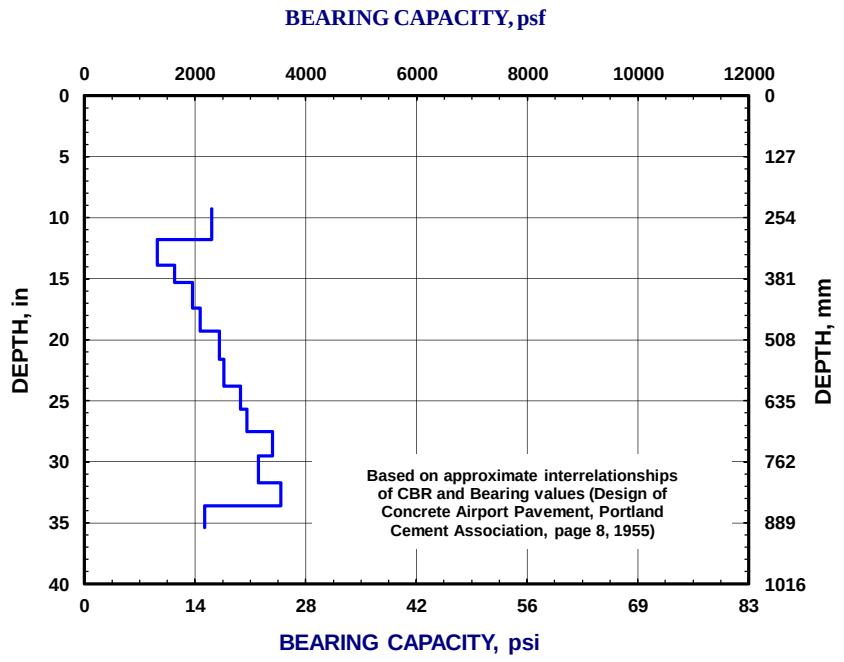

DCP TEST DATA

Project: Espejo Gates - County Line Road **Date:** December 13, 2014

Location: P-10 (As per Plan) **Soil Type(s):** Type in the soil type

Hammer
- ○ 10.1 lbs.
- ◉ 17.6 lbs.
- ○ Both hammers used

Soil Type
- ○ CH
- ◉ CL
- ○ All other soils

No. of Blows	Accumulative Penetration (mm)	Type of Hammer
0	238.8	
2	292.1	
2	342.9	
3	391.2	
3	436.9	
4	497.8	
4	553.7	
4	596.9	
4	650.2	
3	696	
6	754.4	
4	800.1	
5	848.4	
5	901.7	

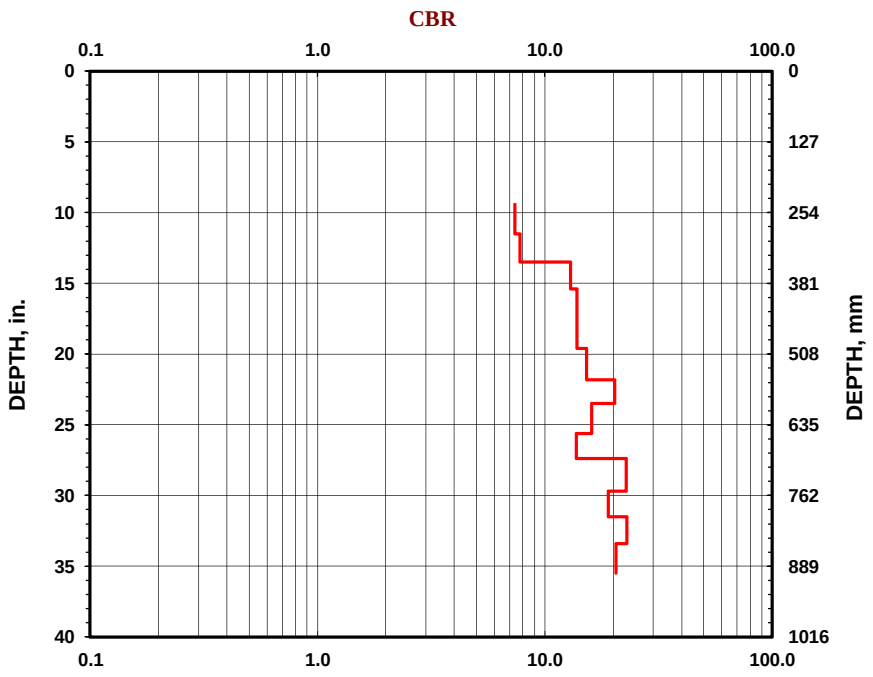

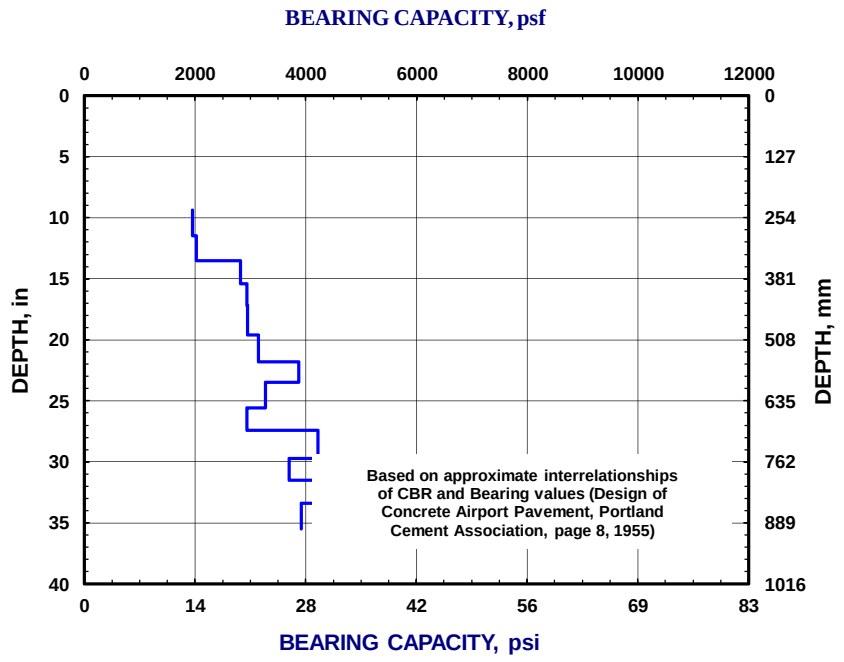

DCP TEST DATA

Project: Espejo Gates - County Line Road **Date:** December 13, 2014

Location: P-11 (As per Plan) **Soil Type(s):** Type in the soil type

Hammer
- ○ 10.1 lbs.
- ◉ 17.6 lbs.
- ○ Both hammers used

Soil Type
- ○ CH
- ◉ CL
- ○ All other soils

No. of Blows	Accumulative Penetration (mm)	Type of Hammer
0	243.8	
5	292.1	
6	350.5	
4	396.2	
5	444.5	
5	497.8	
4	543.6	
6	591.8	
9	647.7	
9	696	
10	744.2	
10	795	
11	850.9	
9	899.2	

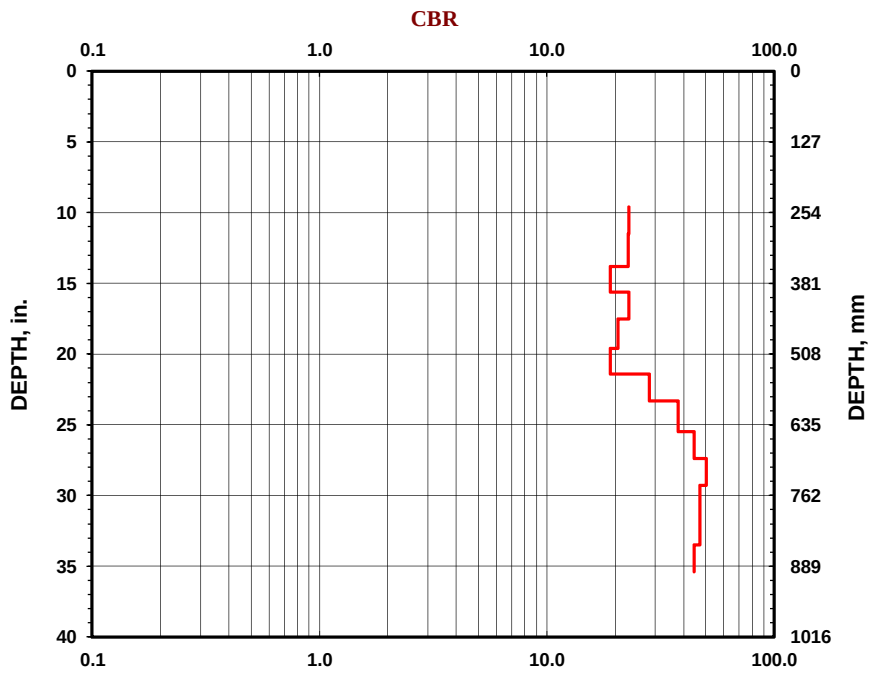

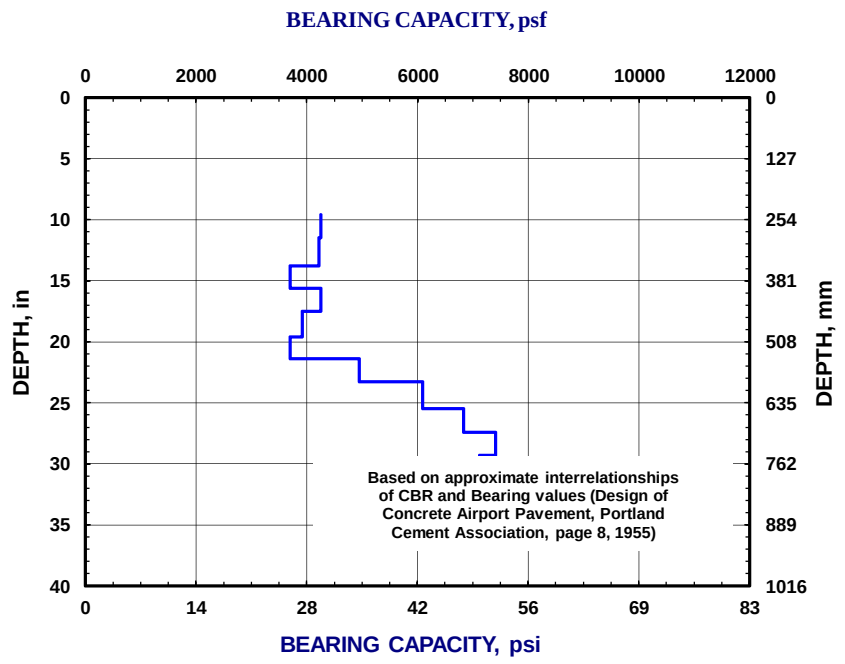

DCP TEST DATA

Project: Espejo Gates - County Line Road **Date:** December 13, 2014

Location: P-12 (As per Plan) **Soil Type(s):** Type in the soil type

Hammer
- ○ 10.1 lbs.
- ◉ 17.6 lbs.
- ○ Both hammers used

Soil Type
- ○ CH
- ◉ CL
- ○ All other soils

No. of Blows	Accumulative Penetration (mm)	Type of Hammer
0	243.8	
1	297.2	
1	342.9	
1	396.2	
1	452.1	
1	495.3	
2	546.1	
3	599.4	
2	647.7	
3	708.7	
2	751.8	
3	795	
4	853.4	
3	901.7	

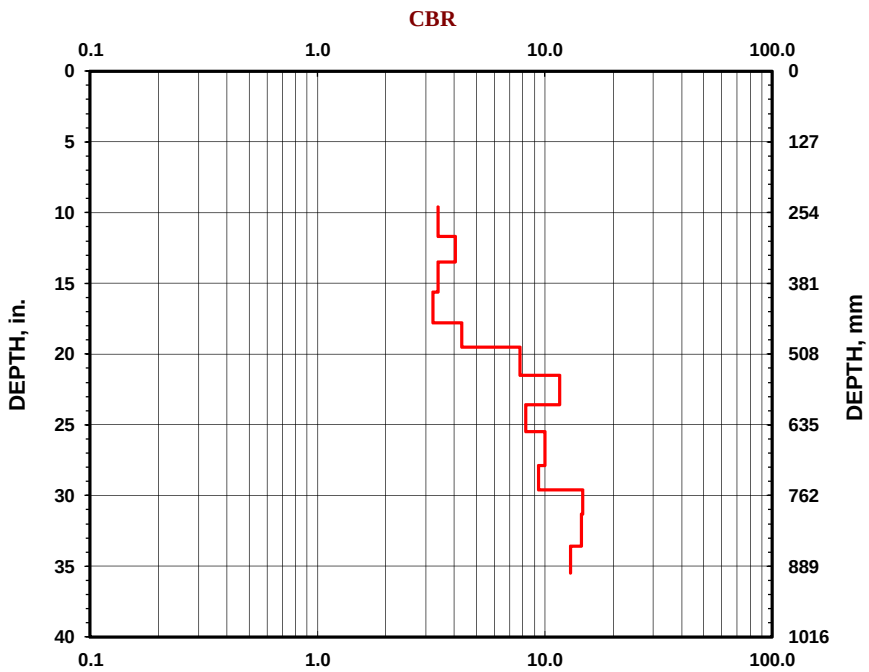

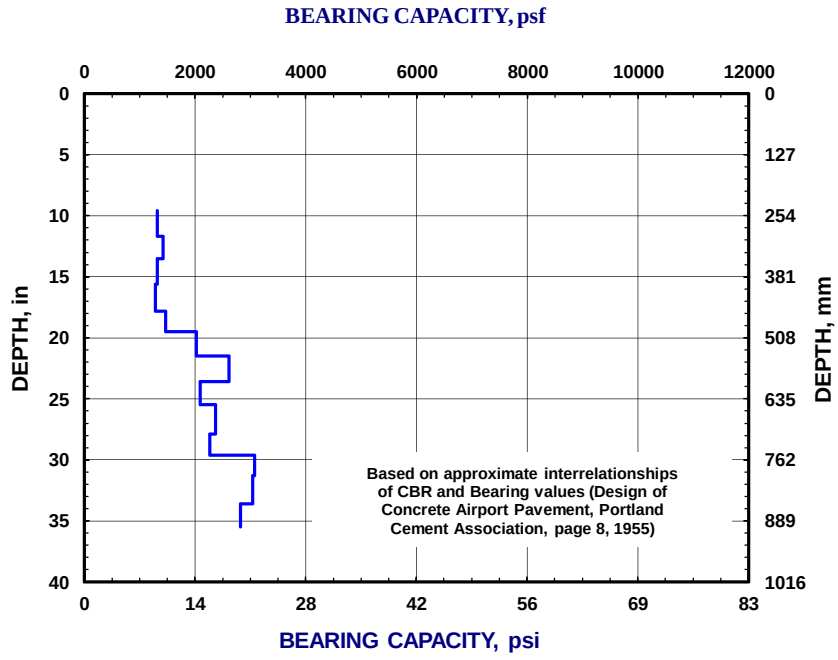

DCP TEST DATA

Project: Espejo Gates - County Line Road **Date:** December 13, 2014

Location: P-13 (As per Plan) **Soil Type(s):** Type in the soil type

Hammer
- ○ 10.1 lbs.
- ◉ 17.6 lbs.
- ○ Both hammers used

Soil Type
- ○ CH
- ◉ CL
- ○ All other soils

No. of Blows	Accumulative Penetration (mm)	Type of Hammer
0	241.3	
3	294.6	
1	345.4	
2	401.3	
2	449.6	
2	497.8	
2	541	
3	602	
3	647.7	
4	696	
4	751.8	
4	800.1	
5	848.4	
8	904.2	

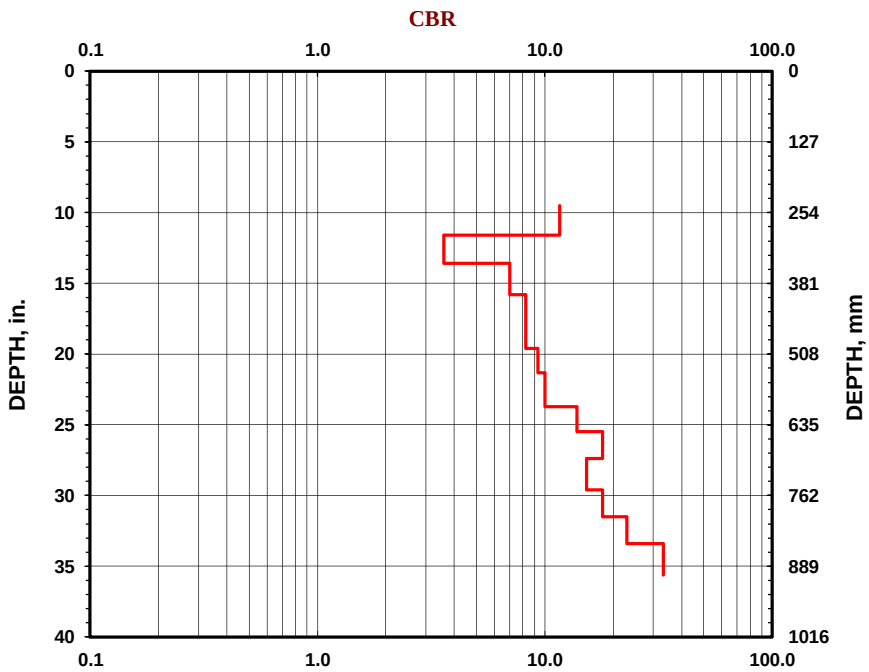

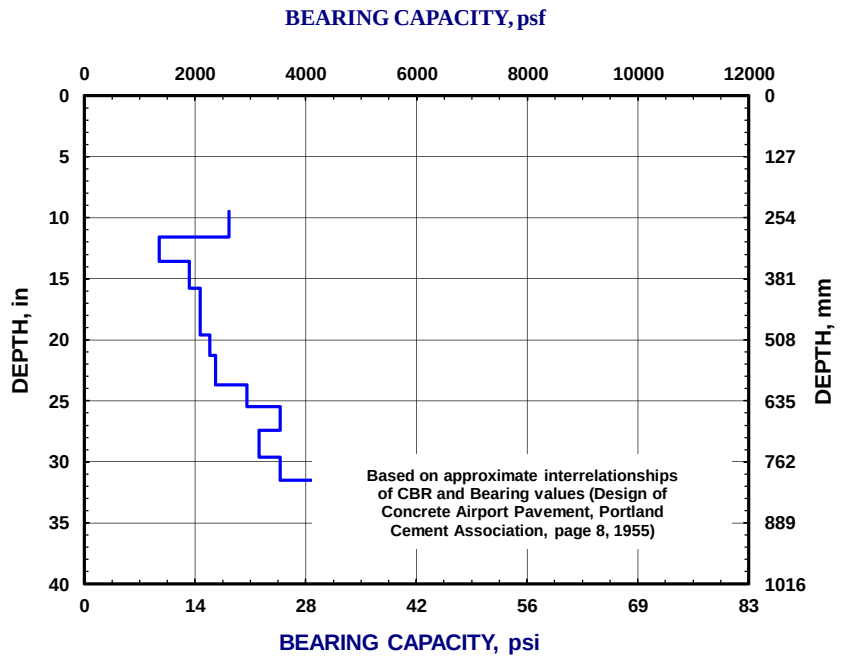

DCP TEST DATA

Project: Espejo Gates - County Line Road **Date:** December 13, 2014

Location: P-14 (As per Plan) **Soil Type(s):** Type in the soil type

Hammer
- ○ 10.1 lbs.
- ◉ 17.6 lbs.
- ○ Both hammers used

Soil Type
- ○ CH
- ◉ CL
- ○ All other soils

No. of Blows	Accumulative Penetration (mm)	Type of Hammer
0	243.6	
2	302.3	
2	348	
2	396.2	
2	444.5	
2	495.3	
2	553.7	
2	607.1	
2	650.2	
2	701	
2	749.3	
2	800.1	
2	848.4	
3	901.7	

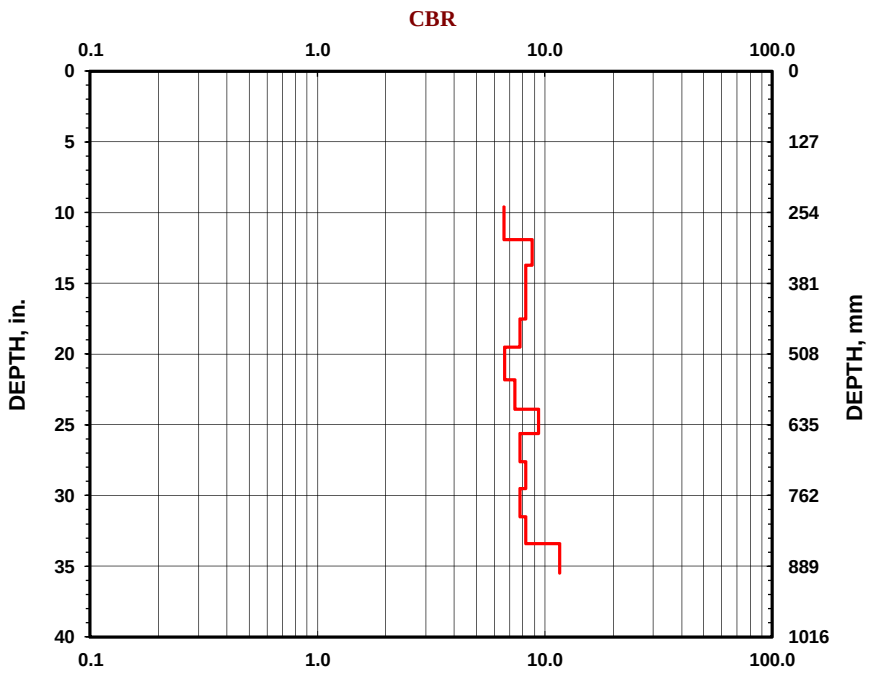

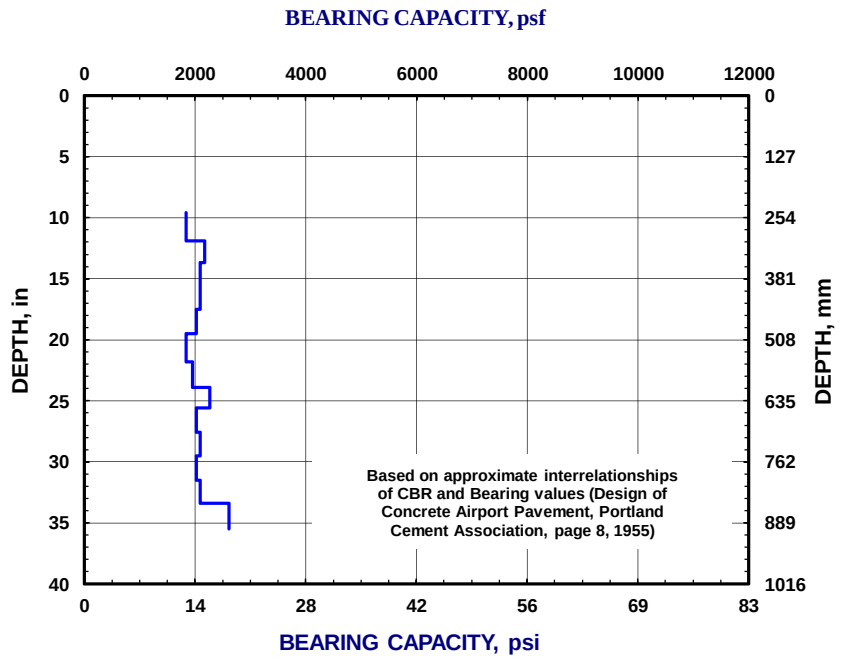

DCP TEST DATA

Project: Espejo Gates - County Line Road **Date:** December 13, 2014

Location: P-15 (As per Plan) **Soil Type(s):** Type in the soil type

Hammer
- ○ 10.1 lbs.
- ◉ 17.6 lbs.
- ○ Both hammers used

Soil Type
- ○ CH
- ◉ CL
- ○ All other soils

No. of Blows	Accumulative Penetration (mm)	Type of Hammer
0	248.9	
1	297.2	
4	340.4	
6	393.7	
3	449.6	
2	490.2	
4	543.6	
6	599.4	
6	650.2	
6	696	
9	749.3	
9	797.6	
9	848.4	
10	901.7	

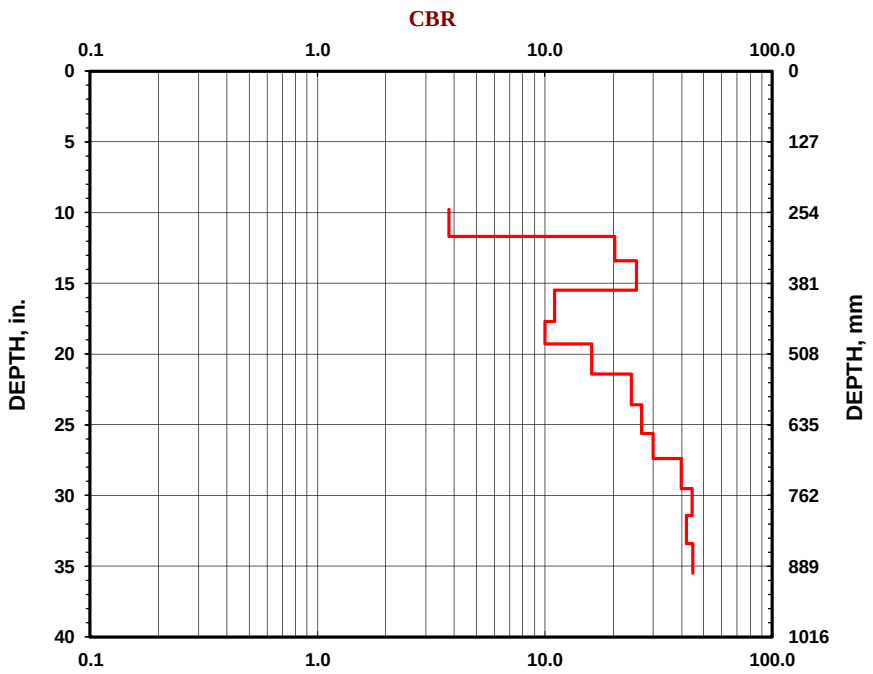

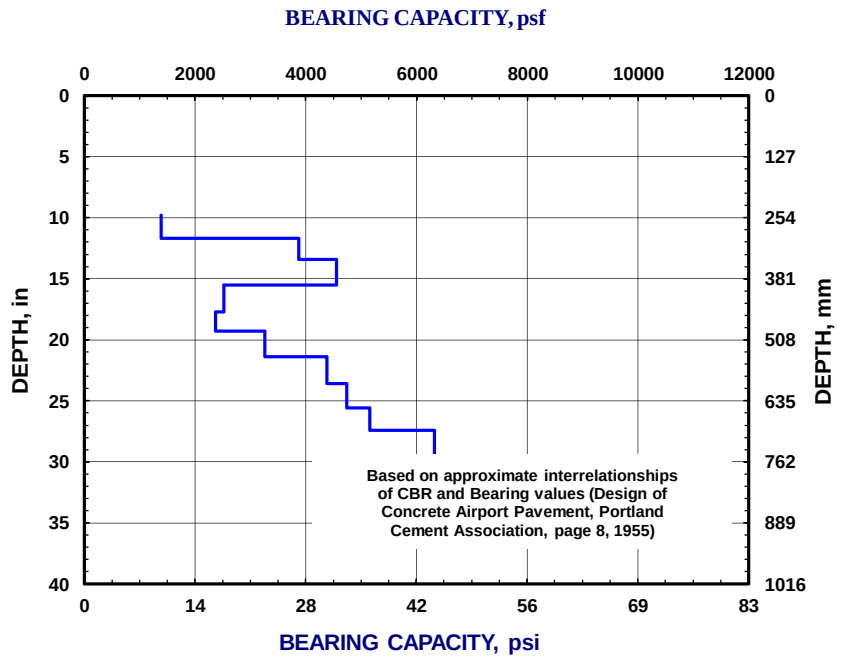

DCP TEST DATA

Project: Espejo Gates - County Line Road **Date:** December 13, 2014

Location: P-16 (As per Plan) **Soil Type(s):** Type in the soil type

Hammer
- ○ 10.1 lbs.
- ◉ 17.6 lbs.
- ○ Both hammers used

Soil Type
- ○ CH
- ◉ CL
- ○ All other soils

No. of Blows	Accumulative Penetration (mm)	Type of Hammer
0	241.3	
2	299.7	
2	348	
2	391.2	
3	449.6	
3	502.9	
2	546.1	
3	594.4	
3	650.2	
3	696	
3	746.8	
4	800.1	
4	848.4	
5	896.6	

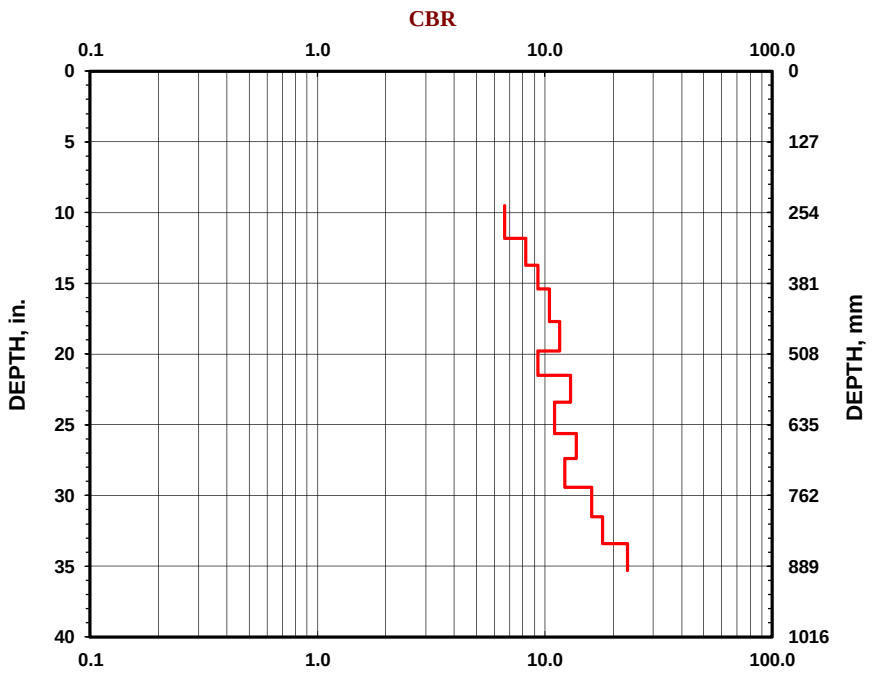

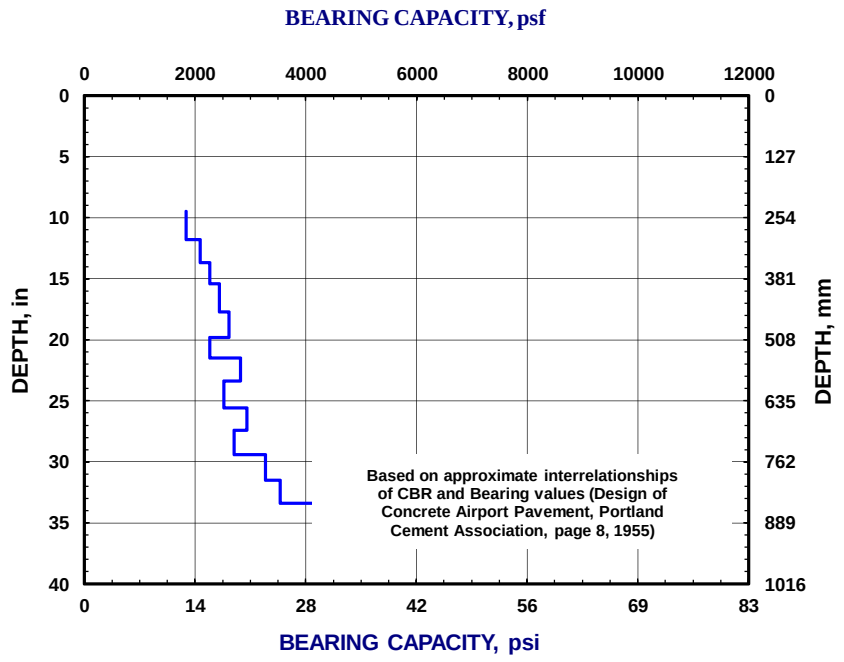

DCP TEST DATA

Project: Espejo Gates - County Line Road **Date:** December 13, 2014

Location: P-17 (As per Plan) **Soil Type(s):** Type in the soil type

Hammer
- ○ 10.1 lbs.
- ◉ 17.6 lbs.
- ○ Both hammers used

Soil Type
- ○ CH
- ◉ CL
- ○ All other soils

No. of Blows	Accumulative Penetration (mm)	Type of Hammer
0	243.8	
3	297.2	
3	353.1	
2	401.3	
1	447	
2	500.4	
2	548.6	
1	599.4	
2	645.2	
2	693.4	
3	749.3	
3	807.7	
2	850.9	
2	894.1	

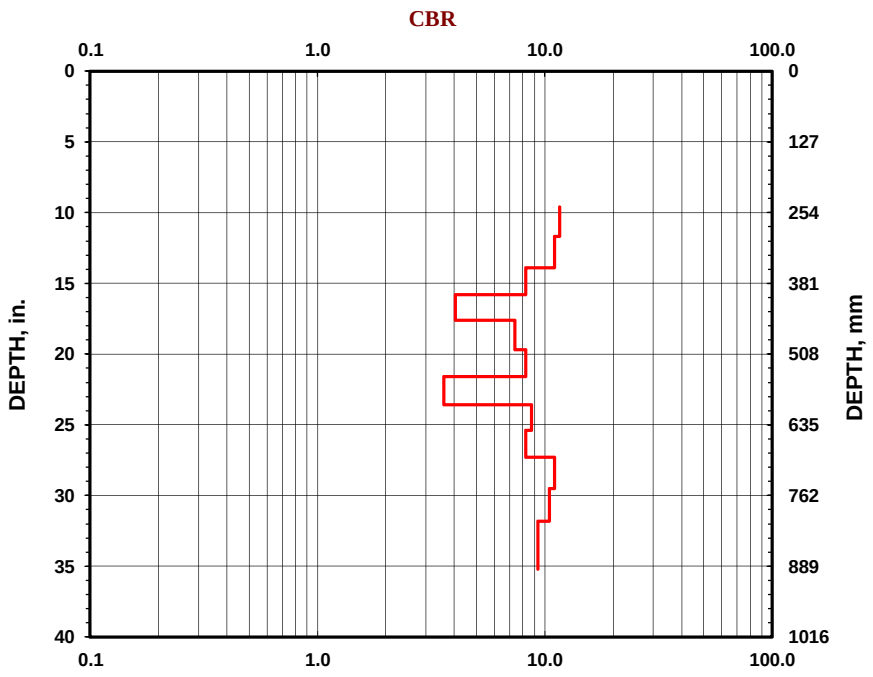

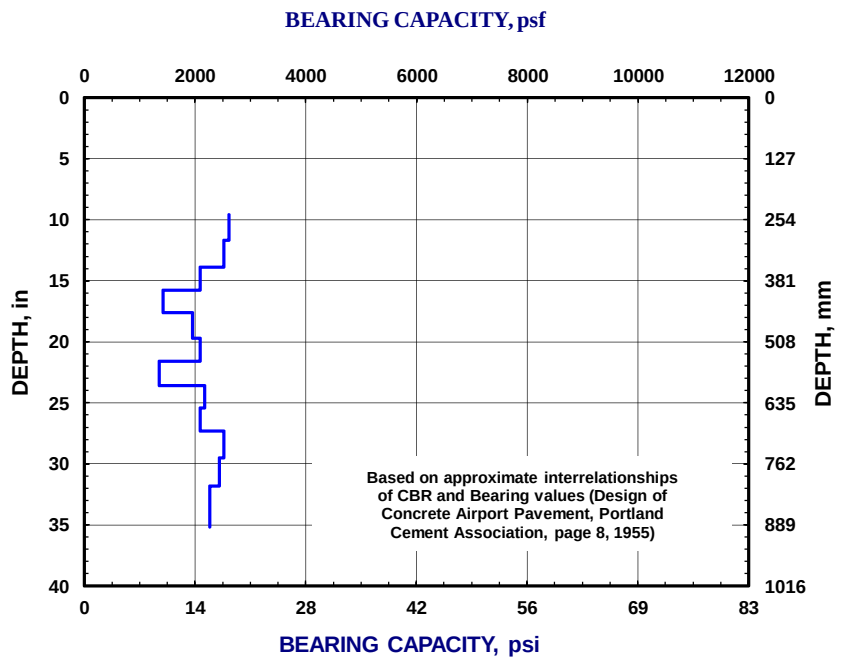

DCP TEST DATA

Project: Espejo Gates - County Line Road **Date:** December 13, 2014

Location: P-18 (As per Plan) **Soil Type(s):** Type in the soil type

Hammer
- ○ 10.1 lbs.
- ◉ 17.6 lbs.
- ○ Both hammers used

Soil Type
- ○ CH
- ◉ CL
- ○ All other soils

No. of Blows	Accumulative Penetration (mm)	Type of Hammer
0	248.9	
9	294.6	
6	350.5	
4	396.2	
4	449.6	
1	495.3	
1	548.6	
2	599.4	
2	647.7	
3	703.6	
3	751.8	
3	797.6	
4	843.3	
6	899.2	

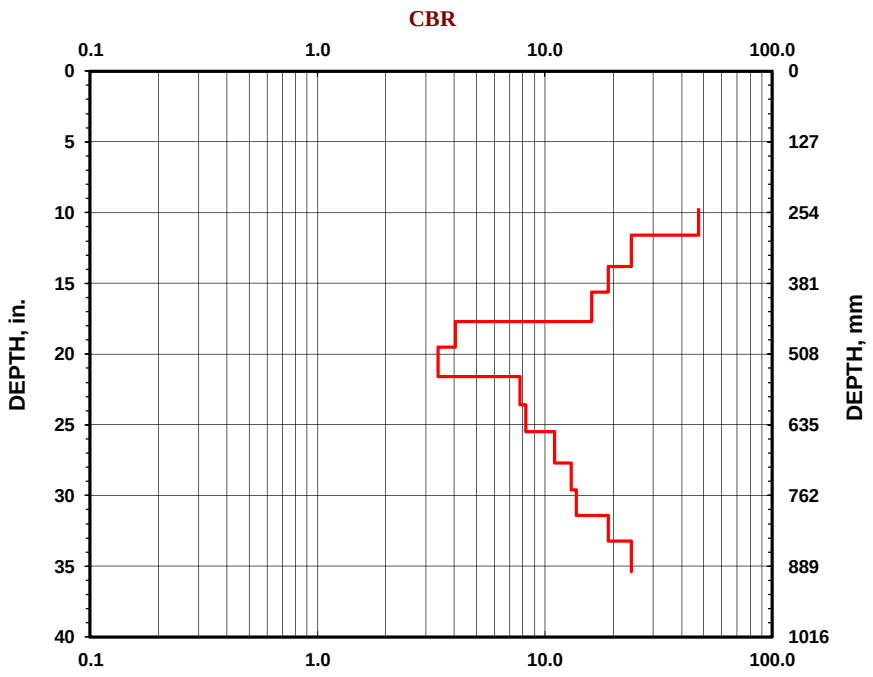

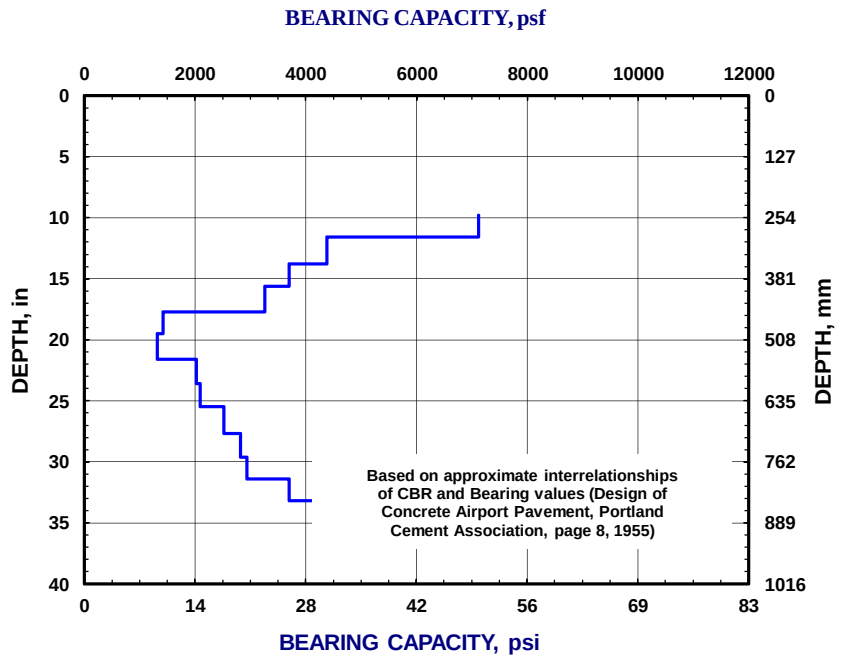

DCP TEST DATA

Project: Espejo Gates - County Line Road **Date:** December 13, 2014

Location: P-19 (As per Plan) **Soil Type(s):** Type in the soil type

Hammer
- ○ 10.1 lbs.
- ◉ 17.6 lbs.
- ○ Both hammers used

Soil Type
- ○ CH
- ◉ CL
- ○ All other soils

No. of Blows	Accumulative Penetration (mm)	Type of Hammer
0	246.4	
1	299.7	
1	348	
1	393.7	
2	447	
1	500.4	
1	543.6	
1	602	
2	657.9	
2	706.1	
1	741.7	
2	802.6	
2	856	
2	901.7	

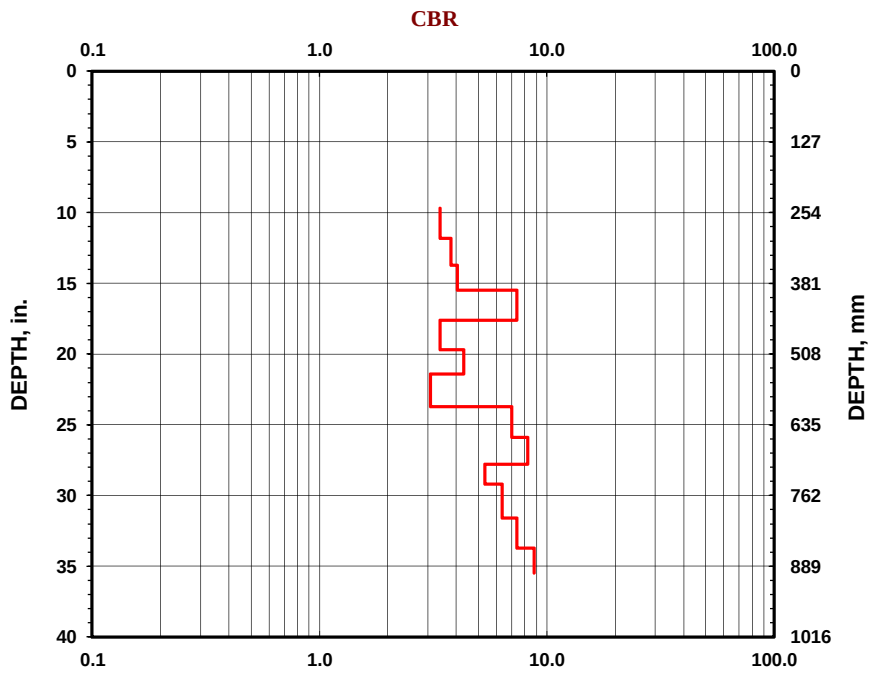

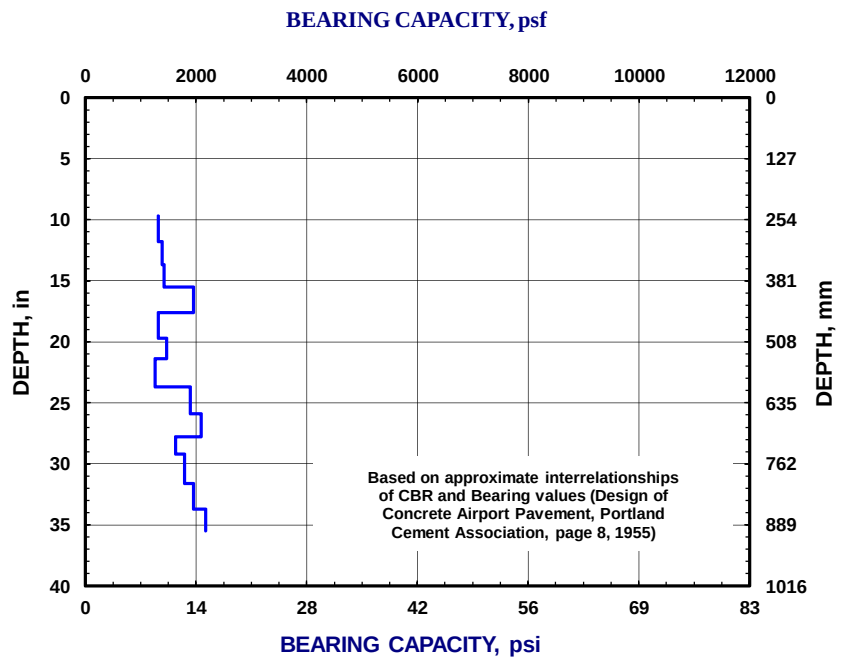

DCP TEST DATA

Project: Espejo Gates - County Line Road **Date:** December 13, 2014

Location: P-20 (As per Plan) **Soil Type(s):** Type in the soil type

Hammer
- ○ 10.1 lbs.
- ◉ 17.6 lbs.
- ○ Both hammers used

Soil Type
- ○ CH
- ◉ CL
- ○ All other soils

No. of Blows	Accumulative Penetration (mm)	Type of Hammer
0	238.8	
3	297.2	
4	342.9	
4	388.6	
4	439.4	
3	502.9	
2	548.6	
2	602	
2	640.1	
4	701	
4	749.3	
5	797.6	
7	848.4	
8	896.6	

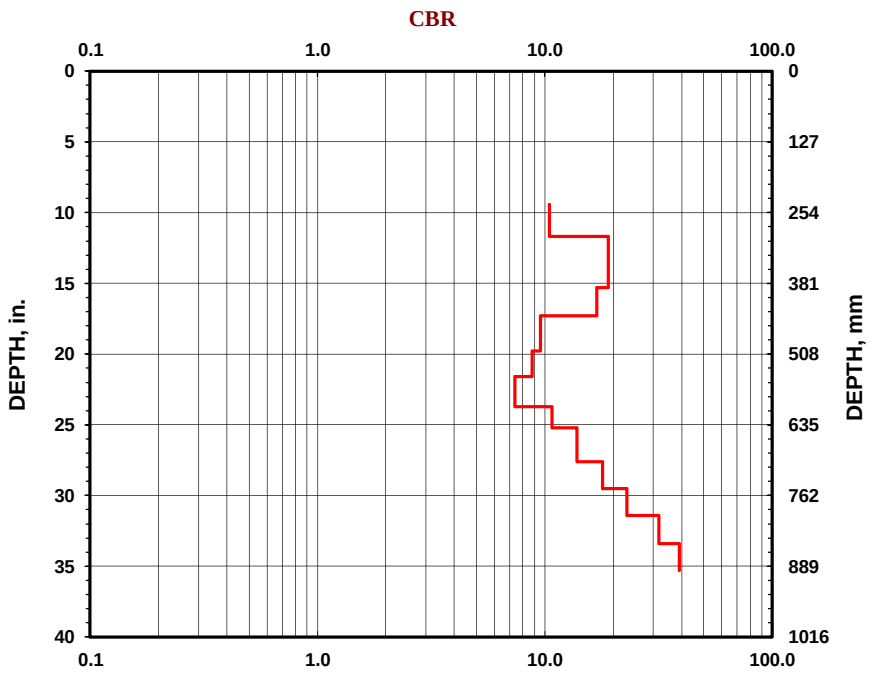

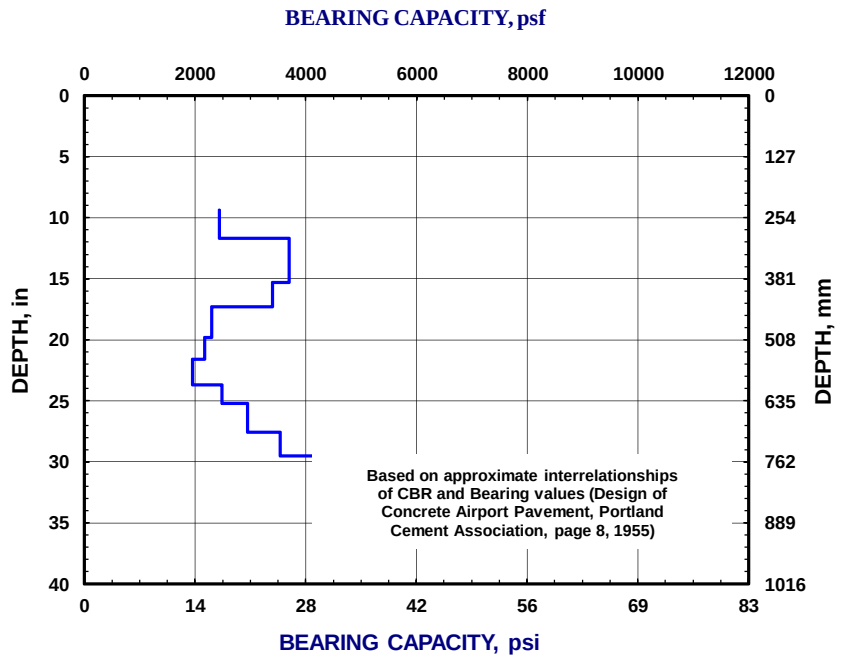

DCP TEST DATA

Project: Espejo Gates - County Line Road **Date:** December 13, 2014

Location: P-21 (As per Plan) **Soil Type(s):** Type in the soil type

Hammer
- ○ 10.1 lbs.
- ◉ 17.6 lbs.
- ○ Both hammers used

Soil Type
- ○ CH
- ◉ CL
- ○ All other soils

No. of Blows	Accumulative Penetration (mm)	Type of Hammer
0	243.8	
6	297.2	
4	353.1	
2	386.1	
3	444.5	
6	500.4	
2	553.7	
1	594.4	
1	647.7	
2	708.7	
1	759.5	
1	800.1	
1	843.3	
2	899.2	

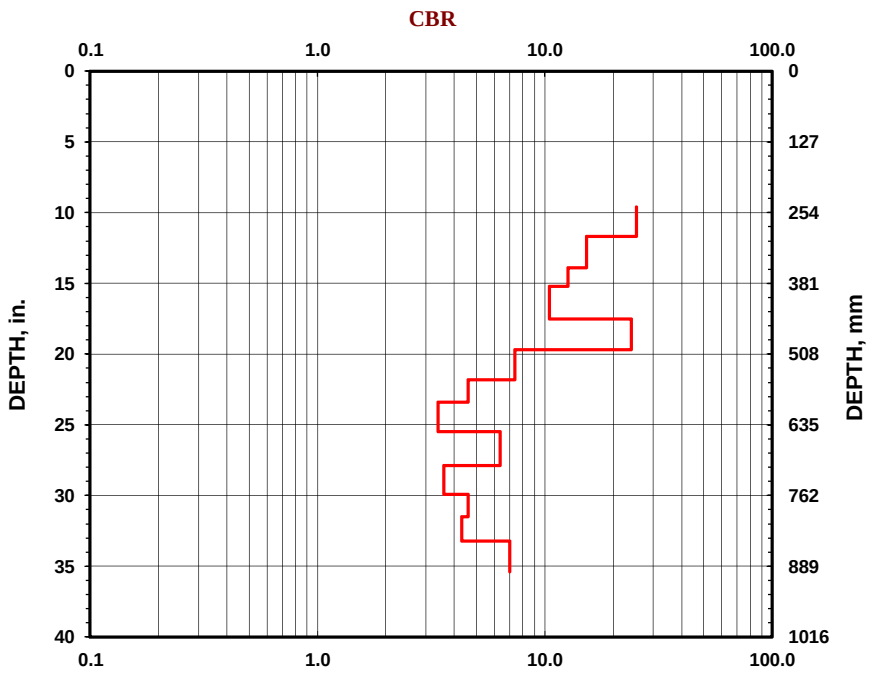

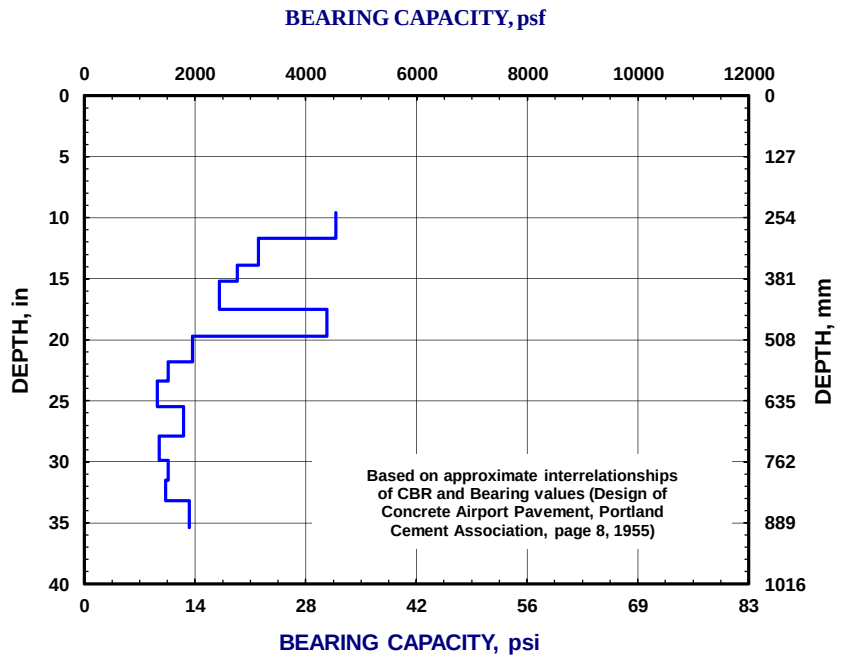

SpectraPave4 PRO™
Pavement Optimization Design Analysis

Design Parameters for AASHTO (1993) Equation

Reliability (%)	= 95	Initial Serviceability	= 4.2
Standard Normal Deviate	= -1.645	Terminal Serviceability	= 2.5
Standard Deviation	= 0.45	Change in Serviceability	= 1.7

Aggregate fill shall conform to following requirement:

D50 <= 27mm (Base course)

Unstabilized Section Material Properties

Layer	Description	Cost ($/ton)	Layer coefficient	Drainage factor
ACC1	Asphalt Wearing Course	70	0.440	N/A
ABC	Aggregate Base Course	20	0.140	1.0

Stabilized Section Material Properties

Layer	Description	Cost ($/ton)	Layer coefficient	Drainage factor
ACC1	Asphalt Wearing Course	70	0.440	N/A
MSL	Mechanically Stabilized Base Cour	20	0.210	1.0

Unstabilized Pavement

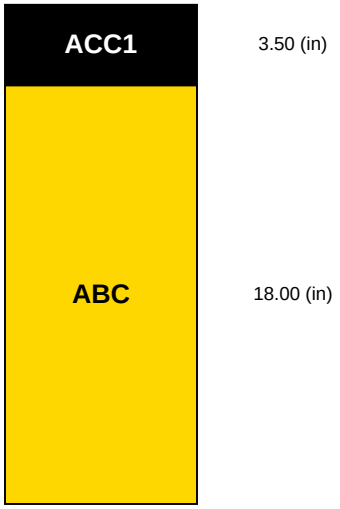

Subgrade Modulus = 9,649 (psi)
Structural Number = 4.060
Calculated Traffic (ESALs) = 3,250,000

Stabilized Pavement

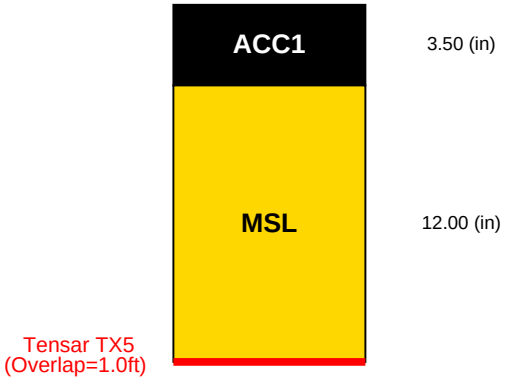

Subgrade Modulus = 9,649 (psi)
Structural Number = 4.060
Calculated Traffic (ESALs) = 3,250,000

LIMITATIONS OF THE REPORT

The designs, illustrations, information and other content included in this report are necessarily general and conceptual in nature, and do not constitute engineering advice or any design intended for actual construction. Specific design recommendations can be provided as the project develops.

Project Name	S&B Infrastructure, Inc. - Espejo Gates County Rd.		
Company Name	Howland Engineering and Surveying Co., Inc.		
Designer	SG	Date	01-16-15

This document was prepared using SpectraPave4 PRO™ Software Version 4.6.1
Developed by Tensar International Corporation
Copyright 1998 - 2014, All Rights Reserved.

Standard Asphalt Pavement - TWH Edition - 20140826
Printed on 01-16-2015 C:\Tensar International Corporation\SpectraPave4 PRO\Untitled.sp4p

SpectraPave4 PRO™
Pavement Optimization Design Analysis

Design Parameters for AASHTO (1993) Equation

Reliability (%)	= 95	Initial Serviceability	= 4.2
Standard Normal Deviate	= -1.645	Terminal Serviceability	= 2.5
Standard Deviation	= 0.45	Change in Serviceability	= 1.7

Aggregate fill shall conform to following requirement:

D50 <= 27mm (Base course)

Unstabilized Section Material Properties

Layer	Description	Cost ($/ton)	Layer coefficient	Drainage factor
ACC1	Asphalt Wearing Course	70	0.440	N/A
ABC	Aggregate Base Course	20	0.110	1.0
SBC	Subbase Course	16	0.110	1.0

Stabilized Section Material Properties

Layer	Description	Cost ($/ton)	Layer coefficient	Drainage factor
ACC1	Asphalt Wearing Course	70	0.440	N/A
MSL	Mechanically Stabilized Base Cour	20	0.169	1.0
SBC	Subbase Course	16	0.110	1.0

Unstabilized Pavement

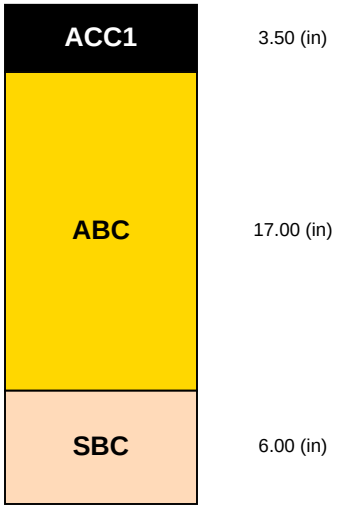

Subgrade Modulus = 9,649 (psi)
Structural Number = 4.070
Calculated Traffic (ESALs) = 3,301,000

Stabilized Pavement

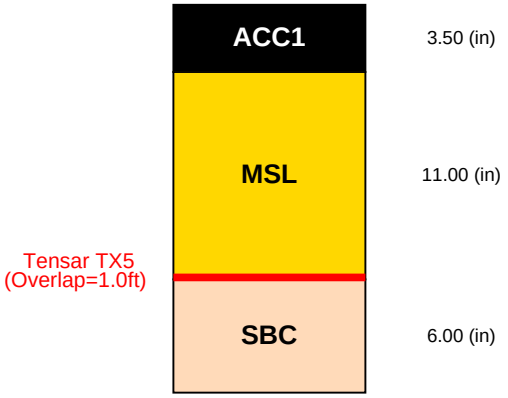

Subgrade Modulus = 9,649 (psi)
Structural Number = 4.059
Calculated Traffic (ESALs) = 3,245,000

LIMITATIONS OF THE REPORT

The designs, illustrations, information and other content included in this report are necessarily general and conceptual in nature, and do not constitute engineering advice or any design intended for actual construction. Specific design recommendations can be provided as the project develops.

Project Name	S&B Infrastructure, Inc. - Espejo Gates County Rd.		
Company Name	Howland Engineering and Surveying Co., Inc.		
Designer	SG	Date	01-16-15

This document was prepared using SpectraPave4 PRO™ Software Version 4.6.1
Developed by Tensar International Corporation
Copyright 1998 - 2014, All Rights Reserved.

Standard Asphalt Pavement - TWH Edition - 20140826
Printed on 01-16-2015 C:\Tensar International Corporation\SpectraPave4 PRO\Untitled.sp4p

SpectraPave4 PRO™
Pavement Optimization Design Analysis

Design Parameters for AASHTO (1993) Equation

Reliability (%)	= 95	Initial Serviceability	= 4.2
Standard Normal Deviate	= -1.645	Terminal Serviceability	= 2.5
Standard Deviation	= 0.45	Change in Serviceability	= 1.7

Aggregate fill shall conform to following requirement:

D50 <= 27mm (Base course)

Unstabilized Section Material Properties

Layer	Description	Cost ($/ton)	Layer coefficient	Drainage factor
ACC1	Asphalt Wearing Course	70	0.440	N/A
ABC	Aggregate Base Course	20	0.140	1.0

Stabilized Section Material Properties

Layer	Description	Cost ($/ton)	Layer coefficient	Drainage factor
ACC1	Asphalt Wearing Course	70	0.440	N/A
MSL	Mechanically Stabilized Base Cour	20	0.220	1.0

Unstabilized Pavement

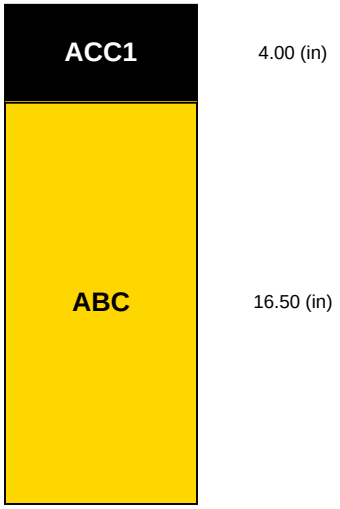

Subgrade Modulus = 9,649 (psi)
Structural Number = 4.070
Calculated Traffic (ESALs) = 3,301,000

Stabilized Pavement

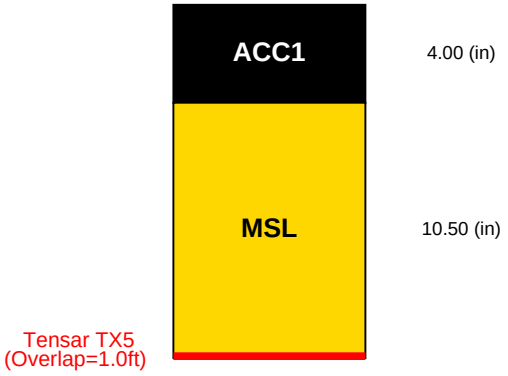

Subgrade Modulus = 9,649 (psi)
Structural Number = 4.070
Calculated Traffic (ESALs) = 3,301,000

LIMITATIONS OF THE REPORT

The designs, illustrations, information and other content included in this report are necessarily general and conceptual in nature, and do not constitute engineering advice or any design intended for actual construction. Specific design recommendations can be provided as the project develops.

Project Name	S&B Infrastructure, Inc. - Espejo Gates County Rd.		
Company Name	Howland Engineering and Surveying Co., Inc.		
Designer	SG	Date	01-16-15

This document was prepared using SpectraPave4 PRO™ Software Version 4.6.1
Developed by Tensar International Corporation
Copyright 1998 - 2014, All Rights Reserved.

Standard Asphalt Pavement - TWH Edition - 20140826
Printed on 01-16-2015 C:\Tensar International Corporation\SpectraPave4 PRO\Untitled.sp4p

SpectraPave4 PRO™
Pavement Optimization Design Analysis

Standard Asphalt Pavement - TWH Edition - 20140826

Design Parameters for AASHTO (1993) Equation

Reliability (%)	= 95	Initial Serviceability	= 4.2
Standard Normal Deviate	= -1.645	Terminal Serviceability	= 2.5
Standard Deviation	= 0.45	Change in Serviceability	= 1.7

Aggregate fill shall conform to following requirement:

D50 <= 27mm (Base course)

Unstabilized Section Material Properties

Layer	Description	Cost ($/ton)	Layer coefficient	Drainage factor
ACC1	Asphalt Wearing Course	70	0.440	N/A
ABC	Aggregate Base Course	20	0.110	1.0
SBC	Subbase Course	16	0.110	1.0

Stabilized Section Material Properties

Layer	Description	Cost ($/ton)	Layer coefficient	Drainage factor
ACC1	Asphalt Wearing Course	70	0.440	N/A
MSL	Mechanically Stabilized Base Cour	20	0.180	1.0
SBC	Subbase Course	16	0.110	1.0

Unstabilized Pavement

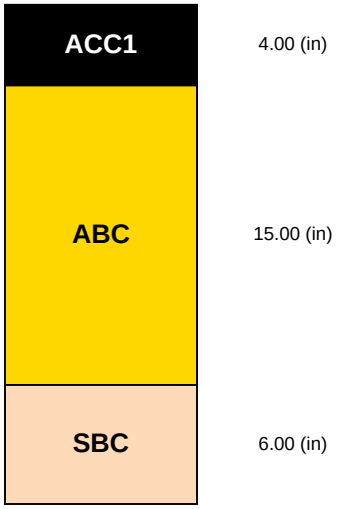

Subgrade Modulus = 9,649 (psi)
Structural Number = 4.070
Calculated Traffic (ESALs) = 3,301,000

Stabilized Pavement

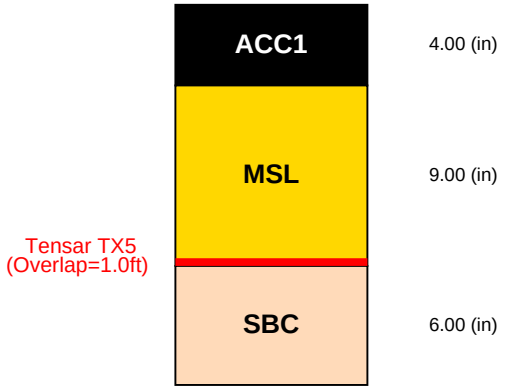

Subgrade Modulus = 9,649 (psi)
Structural Number = 4.040
Calculated Traffic (ESALs) = 3,149,000

LIMITATIONS OF THE REPORT

The designs, illustrations, information and other content included in this report are necessarily general and conceptual in nature, and do not constitute engineering advice or any design intended for actual construction. Specific design recommendations can be provided as the project develops.

Project Name	S&B Infrastructure, Inc. - Espejo Gates County Rd.		
Company Name	Howland Engineering and Surveying Co., Inc.		
Designer	SG	Date	01-16-15

Printed on 01-16-2015 C:\Tensar International Corporation\SpectraPave4 PRO\Untitled.sp4p

This document was prepared using SpectraPave4 PRO™ Software Version 4.6.1
Developed by Tensar International Corporation
Copyright 1998 - 2014, All Rights Reserved.

Important Information about Your

Geotechnical Engineering Report

Subsurface problems are a principal cause of construction delays, cost overruns, claims, and disputes.

While you cannot eliminate all such risks, you can manage them. The following information is provided to help.

Geotechnical Services Are Performed for Specific Purposes, Persons, and Projects

Geotechnical engineers structure their services to meet the specific needs of their clients. A geotechnical engineering study conducted for a civil engineer may not fulfill the needs of a construction contractor or even another civil engineer. Because each geotechnical engineering study is unique, each geotechnical engineering report is unique, prepared *solely* for the client. No one except you should rely on your geotechnical engineering report without first conferring with the geotechnical engineer who prepared it. *And no one — not even you* — should apply the report for any purpose or project except the one originally contemplated.

Read the Full Report

Serious problems have occurred because those relying on a geotechnical engineering report did not read it all. Do not rely on an executive summary. Do not read selected elements only.

A Geotechnical Engineering Report Is Based on A Unique Set of Project-Specific Factors

Geotechnical engineers consider a number of unique, project-specific factors when establishing the scope of a study. Typical factors include: the client's goals, objectives, and risk management preferences; the general nature of the structure involved, its size, and configuration; the location of the structure on the site; and other planned or existing site improvements, such as access roads, parking lots, and underground utilities. Unless the geotechnical engineer who conducted the study specifically indicates otherwise, do not rely on a geotechnical engineering report that was:

- not prepared for you,
- not prepared for your project,
- not prepared for the specific site explored, or
- completed before important project changes were made.

Typical changes that can erode the reliability of an existing geotechnical engineering report include those that affect:

- the function of the proposed structure, as when it's changed from a parking garage to an office building, or from a light industrial plant to a refrigerated warehouse,
- elevation, configuration, location, orientation, or weight of the proposed structure,
- composition of the design team, or
- project ownership.

As a general rule, *always* inform your geotechnical engineer of project changes—even minor ones—and request an assessment of their impact. *Geotechnical engineers cannot accept responsibility or liability for problems that occur because their reports do not consider developments of which they were not informed.*

Subsurface Conditions Can Change

A geotechnical engineering report is based on conditions that existed at the time the study was performed. *Do not rely on a geotechnical engineering report* whose adequacy may have been affected by: the passage of time; by man-made events, such as construction on or adjacent to the site; or by natural events, such as floods, earthquakes, or groundwater fluctuations. *Always* contact the geotechnical engineer before applying the report to determine if it is still reliable. A minor amount of additional testing or analysis could prevent major problems.

Most Geotechnical Findings Are Professional Opinions

Site exploration identifies subsurface conditions only at those points where subsurface tests are conducted or samples are taken. Geotechnical engineers review field and laboratory data and then apply their professional judgment to render an opinion about subsurface conditions throughout the site. Actual subsurface conditions may differ—sometimes significantly—from those indicated in your report. Retaining the geotechnical engineer who developed your report to provide construction observation is the most effective method of managing the risks associated with unanticipated conditions.

A Report's Recommendations Are *Not* Final

Do not overrely on the construction recommendations included in your report. *Those recommendations are not final,* because geotechnical engineers develop them principally from judgment and opinion. Geotechnical engineers can finalize their recommendations only by observing actual

subsurface conditions revealed during construction. *The geotechnical engineer who developed your report cannot assume responsibility or liability for the report's recommendations if that engineer does not perform construction observation.*

A Geotechnical Engineering Report Is Subject to Misinterpretation

Other design team members' misinterpretation of geotechnical engineering reports has resulted in costly problems. Lower that risk by having your geotechnical engineer confer with appropriate members of the design team after submitting the report. Also retain your geotechnical engineer to review pertinent elements of the design team's plans and specifications. Contractors can also misinterpret a geotechnical engineering report. Reduce that risk by having your geotechnical engineer participate in prebid and preconstruction conferences, and by providing construction observation.

Do Not Redraw the Engineer's Logs

Geotechnical engineers prepare final boring and testing logs based upon their interpretation of field logs and laboratory data. To prevent errors or omissions, the logs included in a geotechnical engineering report should *never* be redrawn for inclusion in architectural or other design drawings. Only photographic or electronic reproduction is acceptable, *but recognize that separating logs from the report can elevate risk.*

Give Contractors a Complete Report and Guidance

Some owners and design professionals mistakenly believe they can make contractors liable for unanticipated subsurface conditions by limiting what they provide for bid preparation. To help prevent costly problems, give contractors the complete geotechnical engineering report, *but* preface it with a clearly written letter of transmittal. In that letter, advise contractors that the report was not prepared for purposes of bid development and that the report's accuracy is limited; encourage them to confer with the geotechnical engineer who prepared the report (a modest fee may be required) and/or to conduct additional study to obtain the specific types of information they need or prefer. A prebid conference can also be valuable. *Be sure contractors have sufficient time* to perform additional study. Only then might you be in a position to give contractors the best information available to you, while requiring them to at least share some of the financial responsibilities stemming from unanticipated conditions.

Read Responsibility Provisions Closely

Some clients, design professionals, and contractors do not recognize that geotechnical engineering is far less exact than other engineering disciplines. This lack of understanding has created unrealistic expectations that have led to disappointments, claims, and disputes. To help reduce the risk of such outcomes, geotechnical engineers commonly include a variety of explanatory provisions in their reports. Sometimes labeled "limitations" many of these provisions indicate where geotechnical engineers' responsibilities begin and end, to help others recognize their own responsibilities and risks. *Read these provisions closely.* Ask questions. Your geotechnical engineer should respond fully and frankly.

Geoenvironmental Concerns Are Not Covered

The equipment, techniques, and personnel used to perform a *geoenvironmental* study differ significantly from those used to perform a *geotechnical* study. For that reason, a geotechnical engineering report does not usually relate any geoenvironmental findings, conclusions, or recommendations; e.g., about the likelihood of encountering underground storage tanks or regulated contaminants. *Unanticipated environmental problems have led to numerous project failures.* If you have not yet obtained your own geoenvironmental information, ask your geotechnical consultant for risk management guidance. *Do not rely on an environmental report prepared for someone else.*

Obtain Professional Assistance To Deal with Mold

Diverse strategies can be applied during building design, construction, operation, and maintenance to prevent significant amounts of mold from growing on indoor surfaces. To be effective, all such strategies should be devised for the *express purpose* of mold prevention, integrated into a comprehensive plan, and executed with diligent oversight by a professional mold prevention consultant. Because just a small amount of water or moisture can lead to the development of severe mold infestations, a number of mold prevention strategies focus on keeping building surfaces dry. While groundwater, water infiltration, and similar issues may have been addressed as part of the geotechnical engineering study whose findings are conveyed in this report, the geotechnical engineer in charge of this project is not a mold prevention consultant; ***none of the services performed in connection with the geotechnical engineer's study were designed or conducted for the purpose of mold prevention. Proper implementation of the recommendations conveyed in this report will not of itself be sufficient to prevent mold from growing in or on the structure involved.***

Rely, on Your ASFE-Member Geotechncial Engineer for Additional Assistance

Membership in ASFE/The Best People on Earth exposes geotechnical engineers to a wide array of risk management techniques that can be of genuine benefit for everyone involved with a construction project. Confer with you ASFE-member geotechnical engineer for more information.

ASFE
THE BEST PEOPLE ON EARTH

8811 Colesville Road/Suite G106, Silver Spring, MD 20910
Telephone: 301/565-2733 Facsimile: 301/589-2017
e-mail: info@asfe.org www.asfe.org

Copyright 2004 by ASFE, Inc. Duplication, reproduction, or copying of this document, in whole or in part, by any means whatsoever, is strictly prohibited, except with ASFE's specific written permission. Excerpting, quoting, or otherwise extracting wording from this document is permitted only with the express written permission of ASFE, and only for purposes of scholarly research or book review. Only members of ASFE may use this document as a complement to or as an element of a geotechnical engineering report. Any other firm, individual, or other entity that so uses this document without being an ASFE member could be commiting negligent or intentional (fraudulent) misrepresentation.

IIGER06075.0MRP